# REGULAR MEETING
# OF THE CITY COUNCIL

## January 11, 2022

## ADDISON TREEHOUSE

## 14681 MIDWAY RD. SUITE 200, ADDISON, TX 75001
## 5:15 PM EXECUTIVE SESSION & WORK SESSION
## 7:30 PM REGULAR MEETING

Notice is hereby given that the Addison City Council will conduct a Regular Meeting on Tuesday, January 11, 2022 at the Addison TreeHouse. A quorum of the governing body will be physically present at the foregoing location. Seating for the public will be available using CDC recommended social distancing measures. Telephonic or videoconferencing capabilities will be utilized to allow individuals to address the Council. Email comments may be submitted to: iparker@addisontx.gov by 3:00 pm the day of the meeting. Members of the public are entitled to participate remotely via Toll-Free Dial-in Number: 877.853.5247; Meeting ID: 409.327.0683; Participant ID: #. For more detailed instructions on how to participate in this meeting visit our Agenda Page. The meeting will be live streamed on Addison's website at: www.addisontexas.net.

---

**Call Meeting to Order**

---

**Pledge of Allegiance**

---

## EXECUTIVE SESSION

Closed (Executive) Session of the Addison City Council pursuant to:

Section 551.087, Texas Government Code, to discuss or deliberate regarding commercial or financial information that the City Council has received from a business prospect or business prospects that the City Council seeks to have locate, stay, or expand in or near the territory of the Town of Addison and with which the City Council is conducting economic development negotiations, and/or to deliberate the offer of a financial or other incentive to such business prospect or business prospects:

- Discuss master developer proposals for the Town's Transit Oriented Development Project

Reconvene in to Regular Session: In accordance with Texas Government Code, Chapter 551, the City Council will reconvene into Regular Session to consider action, if any, on matters discussed in Executive Session.

---

## WORK SESSION

1. Present and Discuss **Phase II of the Facilities Utilization Study.**

---

## REGULAR MEETING

---

**Announcements and Acknowledgments Regarding Town and Council Events and Activities**

- **Proclamation: Madeleine Chen and Elizabeth Echt.**

**Discussion of Meetings / Events**

---

**Public Comment**

The City Council invites citizens to address the City Council on any matter, including items on the agenda, except public hearings that are included on the agenda. Comments related to public hearings will be heard when the specific hearing starts. Citizen comments are limited to three (3) minutes, unless otherwise required by law. To address the Council, please fill out a City Council Appearance Card and submit it to a staff member prior to the Public Comment item on the agenda. The Council is not permitted to take any action or discuss any item not listed on the agenda. The Council may choose to place the item

on a future agenda.

---

**Consent Agenda**
All items listed under the Consent Agenda are considered routine by the City Council and will be enacted by one motion with no individual consideration. If individual consideration of an item is requested, it will be pulled from the Consent Agenda and discussed separately.

2. Consider Action on the **Minutes from the December 14, 2021 City Council Meeting**

3. Consider Action on an **Ordinance Approving the Dedication of Public Right-of-Way for the Extension of Bella Lane**.

4. Consider Action on an **Ordinance Revising Sec. 78-175 Overnight Parking of Certain Vehicles Within Residential Areas Prohibited and Sec. 78-286 Storage to Clarify Language for Enforcement of Commercial Vehicle Parking**.

5. Consider Action on a **Resolution Approving a Reimbursement Grant Funding Agreement Between the Town of Addison and Metrocrest Services for Metrocrest Services' Building Our Future Capital Campaign and Authorizing the City Manager to Execute the Agreement** in an Amount Not to Exceed $120,000.

6. Consider Action on a **Resolution Approving an Agreement Between the Town of Addison and Fuquay, Inc. for Manhole Rehabilitation Services for Fiscal Year 2021-2022 and Authorizing the City Manager to Execute the Agreement** in an Amount Not to Exceed $59,467.

7. Consider Action on a **Resolution Approving a Professional Engineering and Design Services Agreement Between the Town of Addison and Kleinfelder, Inc. for the Surveyor Pump Station Electrical Improvements and Authorizing the City Manager to Execute the Agreement** in an Amount Not to Exceed $103,599.

8. Consider Action on a **Resolution Approving a Professional Engineering and Design Services Agreement Between the Town of Addison and Icon Consulting Engineers, Inc. in Connection with Vitruvian Park Public Infrastructure Phase 9, Block 701 to Serve Vitruvian Townhomes and Authorizing the City Manager to Execute the Agreement** in an Amount Not to Exceed $103,980.

9. Consider Action on a **Resolution Approving a Professional Engineering and Design Services Agreement Between the Town of Addison and MPI Architects for Phase II of the Facilities Utilization Study and Authorizing the City Manager to Execute the Agreement** in an Amount Not to Exceed $122,500.

10. Consider Action on a **Resolution Approving the Purchase of (2) 2022 BMW Police Motorcycles for the Town of Addison Police Department Utilizing an Interlocal Agreement with the City of Fort Worth, Texas and Authorizing the City Manager to Execute the Purchase Order** in an Amount Not to Exceed $55,251.74.

11. Consider Action on a **Resolution Approving the Purchase of (1) 2022 John Deere 310SL Backhoe from RDO Equipment CO, Through Sourcewell Cooperative Purchasing and Authorizing the City Manager to Execute the Purchase Order** in an Amount Not to Exceed $140,240.

12. Consider Action to **Reject Proposals Received in Response to Bid #21-16 for Redding Trail Drainage and Amenity Improvements.**

---

**Regular Items**

13. Hold a Public Hearing, Present, Discuss, and Consider Action on an **Ordinance Amending Planned Development (PD) District Ordinance O19-22 for a 10.88-Acre Property Located at the Southeast Corner of Belt Line Road and Montfort Drive in Order to Modify Use Regulations by Allowing Medical Office as a Permitted Use**. Case 1844-Z/Prestonwood Place.

14. Hold a Public Hearing, Present, Discuss, and Consider Action on an **Ordinance for Property Located at 5294 Belt Line Road, Suite 110, Currently Zoned Planned Development (PD) Through Ordinance O19-022, for a Special Use Permit (SUP) to Allow a Restaurant**. Case 1845-SUP/5294 Belt Line Road, Suite 110 (La La Land Kind Café).

15. Present, Discuss, and Consider Action on a **Resolution Casting Addison's Vote for Michael Hurtt for the Fourth Member of the Board of Directors of the Dallas Central Appraisal District.**

16. Present, Discuss, and Consider Action on an **Ordinance Calling and Ordering the May 7, 2022 General Election.**

17. Present, Discuss, and Consider Action on an **Ordinance Authorizing the Issuance of Town of Addison, Texas, General Obligation Refunding Bonds, Series 2022 in the Approximate Amount of $8,755,000; Awarding the Sale Thereof; Levying a Tax, and Providing for the Security and Payment of Said Bonds; Authorizing the Execution and Delivery of a Paying Agent/Registrar Agreement and Deposit Agreement; Approving the Official Statement; Enacting Other Provisions Relating to the Subject; and Declaring an Effective Date**.

18. Present, Discuss, and Consider Action on a **Resolution Approving a Contract Agreement Between the Town of Addison and Tiseo Paving Company, Inc. for the Bella Lane South Extension & Alpha Road Connector Project and Authorizing the City Manager to Execute the Contract** in an Amount Not to Exceed $2,999,910.66.

---

**Adjourn Meeting**

---

NOTE: The City Council reserves the right to meet in Executive Session closed to the public at any time in the course of this meeting to discuss matters listed on the agenda, as authorized by the Texas Open Meetings Act, Texas Government Code, Chapter 551, including §551.071 (private consultation with the attorney for the City); §551.072 (purchase, exchange, lease or value of real property); §551.074 (personnel or to hear complaints against personnel); §551.076 (deployment, or specific occasions for implementation of security personnel or devices); and §551.087 (economic development negotiations). Any decision held on such matters will be taken or conducted in Open Session following the conclusion of the Executive Session.

**THE TOWN OF ADDISON IS ACCESSIBLE TO PERSONS WITH DISABILITIES. PLEASE CALL (972) 450-7017 AT LEAST 48 HOURS IN ADVANCE IF YOU NEED ASSISTANCE.**

POSTED BY: _____
Irma G. Parker, City Secretary
DATE POSTED: January 6, 2022
TIME POSTED: 4:00 PM
DATE REMOVED FROM BULLETIN BOARD: _____
REMOVED BY: _____

**Council Meeting** **1.**

**Meeting Date:** 01/11/2022

**Department:** General Services

**Pillars:** Excellence in Asset Management

**Milestones:** Implement the Asset Management Plan in accordance with the Asset Management Policy, utilizing information systems

---

**AGENDA CAPTION:**

Present and Discuss **Phase II of the Facilities Utilization Study.**

**BACKGROUND:**

Town staff worked with the LPA architecture firm to conduct Phase I of a facility study that evaluated Town facilities including the Conference and Theatre Center, Finance building, Central Fire Station, Fire Station 2, Police and Courts building, Service Center, and Town Hall. The findings were presented at the City Council meeting on April 14, 2020.

During that presentation, Council asked that staff continue the study in a second phase and consider the following:

- Financial Analysis
  - What is the tipping point of building new versus modernizing facilities?
  - What is the most economical plan over the next 40-50 years?
  - How does this fit into the Transit Oriented Development plans?
- Develop a strategy for each facility.
- Explore the Public-Private Partnership (P3) option for funding.

To conduct Phase II, staff had to identify a new vendor because an acceptable scope of work and price could not be negotiated with LPA. Staff identified MPI Architects (MPI). MPI is an Addison business with a long history of working with the Town on facility related projects including facility studies. MPI was asked to present a proposal that capitalized on data collected in Phase I and provide a financial analysis and strategy for three concepts:

- The Town remaining in existing facilities and reorganizing the departments with facility updates to meet current needs.
- Expand existing facilities to meet current and future needs.
- Rough square footage requirements for a new City Center to bring several departments and functions into a more traditional City Hall facility.

This second phase will also include:

- How the Town will address staff and visitor safety in facilities from viruses such as Covid-19.

- Aspects of the Addison TreeHouse where Economic Development and Tourism is currently located.

Staff will explore the P3 options separately from this study.

Staff and MPI will make a presentation on this proposal.

**RECOMMENDATION:**
Staff seeks direction from Council.

---

**Attachments**

Presentation - Phase II of Facilities Utilization Study

---

# Phase II of the Facilities Utilization Study

# Background

- **Phase I of the Facilities Utilization Study**
  - Conducted analysis of existing facilities and how departments utilize facilities
  - Reviewed Condition Analysis
  - Reviewed ADA Study
  - Developed three broad concepts for consideration
    1. Renovate existing facilities and bring up to code
    2. Strategically add space to existing facilities and renovate to bring into compliance
    3. Construct new facilities

# Background

- Council asked that staff explore three financial aspects:
  1. Financial Analysis
     - What is the tipping point where it makes more sense to build new rather than remodel / modernize?
     - What is the most economical plan over the next 40-50 years?
     - How does this fit into Transit Oriented Development?
  2. Develop a strategy for each of the existing facilities.
  3. Explore the P3 option of funding

# Phase II of the Facilities Utilization Study

- Staff's decision to use MPI for Phase II
  - Staff had to identify a new vendor because an acceptable scope of work and price could not be negotiated with LPA
- Staff discussed exploring these financial aspects with MPI Architects.
- MPI has a long history with the Town of Addison
  - They have worked on many Addison facility and ADA projects
  - They have done some smaller scale facility studies with Town buildings
  - MPI presented a proposal for Phase II that will capitalize on the data gathered in Phase I and conduct a financial analysis and develop a strategy for each facility.

# Phase II of the Facilities Utilization Study

- The Second Phase will incorporate two aspects not considered in Phase I:
  1. How we address staff and visitor safety in facilities from a Covid-19 perspective.
  2. Consider aspects of the TreeHouse where Economic Development and Tourism is currently located.

# Phase II of the Facilities Utilization Study

- Phase II will take 6 months to complete
- Cost of the study is not to exceed $122,500
- Once completed, the findings will be presented to the City Council

# Questions

**Council Meeting** **2.**

**Meeting Date:** 01/11/2022

**Department:** City Secretary

---

**AGENDA CAPTION:**

Consider Action on the **Minutes from the December 14, 2021 City Council Meeting**

**BACKGROUND:**

The minutes for the December 14, 2021 City Council Meeting have been prepared for consideration.

**RECOMMENDATION:**

Administration recommends approval.

---

**Attachments**

Minutes - December 14, 2021

---

# D R A F T

# OFFICIAL ACTIONS OF THE ADDISON CITY COUNCIL

**December 14, 2021**

**5:15 p.m. Executive Session & Work Session**
**7:30 p.m. Regular Meeting**

**Addison TreeHouse**
**14681 Midway Rd., Addison, TX 75001**

The Addison City Council conducted its Regular Council Meeting on Tuesday, December 14, 2021, at the Addison TreeHouse with a quorum of the City Council physically present. Limited seating for members of the public was available using CDC recommended social distancing measures. The Town utilized telephone and videoconferencing to facilitate participation in the meeting. Interested parties were able to make public comments and address the Council via emailed comments submitted to the City Secretary at iparker@addisontx.gov by 3:00 pm on the meeting day. Members of the public were also entitled to participate remotely via Toll-Free Dial-in Number: 877.853.5247; Meeting ID: 409.327.0683 Participant ID: #. Detailed instructions on how to participate in this meeting were available on the Town's website on the Agenda Page. The meeting was live streamed on Addison's website at www.addisontexas.net

**Present:** Mayor Joe Chow; Mayor Pro Tempore Guillermo Quintanilla; Deputy Mayor Pro Tempore Paul Walden; Council Member Tom Braun; Council Member Lori Ward; Council Member Kathryn Wheeler; Council Member Marlin Willesen.

---

**Call Meeting to Order:** Mayor Chow called the meeting to order.

---

**Pledge of Allegiance:** Mayor Chow led the Pledge of Allegiance

---

## EXECUTIVE SESSION

**Closed (Executive) Session of the Addison City Council pursuant to:**

**Section 551.071, Texas Government Code, to conduct a private consultation with its attorney pertaining to:**

- Bigelow Arizona TX-344, Limited Partnership D/B/A Suites of America and/or Budget Suites of America v. Town of Addison, Cause No. DC-19-09630, 191st Judicial District, Dallas County District Court.

- G J Seeding, LLC v. FNH Construction, LLC and Hudson Insurance Company, Cause No. DC-20-11409, 134th Judicial District, Dallas County, Texas.

**Section 551.074, Tex. Gov. Code, to deliberate the appointment, employment, evaluation, reassignment, duties, discipline or dismissal of a public officer or employee, pertaining to:**

- City Manager's Annual Evaluation

Mayor Chow announced that the City Manager's Evaluation would be discussed at this time and the remaining item would be discussed following the Regular Agenda Items.

Mayor Chow closed the Open Session to convene the City Council into Closed Executive Session at 5:20 p.m.

**Reconvene into Regular Session: In accordance with Texas Government Code, Chapter 551, the City Council will reconvene into Regular Session to consider action, if any, on matters discussed in Executive Session.**

Mayor Chow reconvened the City Council into Open Session at 7:30 p.m. No action was taken as a result of Executive Session.

# WORK SESSION

1. **Present and Discuss Metrocrest Services' Request to Support Their Building Our Future Capital Campaign.**

Bill Hawley, Director of Administrative Services, presented this item. He reviewed that the Town of Addison received a letter dated July 15, 2021 from Metrocrest Services requesting the Town's support for their "Building Our Future Capital Campaign." The four cities served by Metrocrest Services were asked to provide a total of $2 million in support of building a 48,000 square foot facility. Addison's share of that amount would be $120,000. This proposal was discussed by Council during the August 24, 2021 Council meeting. At that meeting, Council asked staff to provide (1) a legal opinion on providing this type of financial support to non-profit organizations; (2) information regarding the actions taken by Carrollton, Coppell, and Farmers Branch in response to the Campaign request; and (3) the return on investment of supporting non-profit organizations in the community.

Mr. Hawley advised that the $120,000 request for the Campaign represents 0.7 percent of the total campaign budget and 1.1 percent of the construction only cost. The new facility will allow Metrocrest to eliminate the rent paid for their current location and further enhance their services to the community. In response to the City Council questions presented at the August meeting:

(1) Legal Opinion: City Attorney Whitt L. Wyatt opined that it would be legal for the Town to provide funding toward this project as authorized in Chapter 380 of the Texas Local

Government Code. This provision in the law allows the City Council to establish and provide for the administration of one or more programs, including programs for making loans and grants of public money to promote state or local economic development and stimulate business development within the local community.

(2) Carrollton, Coppell, and Farmers Branch Council Actions: The actions taken by the City Councils of the three other cities asked to support the Campaign are as follows:
   a. The Carrollton City Council had not acted as of December 14. Staff has been told the item is tentatively scheduled for a January 2022 meeting;
   b. The Coppell City Council approved a Resolution supporting Metrocrest Services through a contribution of $80,000 toward the Campaign; and
   c. The Farmers Branch City Council approved a Resolution supporting Metrocrest Services through a Community Support Facility Grant in an amount $560,000 to be used for the construction of Metrocrest's new building.

(3) Return on Investment of Supporting Metrocrest Services: For over 50 years, Metrocrest Services has provided a variety of programs for Addison residents such as a food pantry, job skills training, senior programs, and rent assistance. Addison sees direct and indirect returns on the investment made to support Metrocrest in fulfilling their mission.
Metrocrest Services has grown to serve more clients annually for the past decade with rapid growth due to the pandemic. The budgeted expenditures for Fiscal Year 2019, the last full pre-pandemic year, were $5,820,305 compared to $12,458,368 for Fiscal Year 2022 (a 114% increase). The number of Addison residents served by Metrocrest Services has increased from 990 in Fiscal Year 2019 to a projected 1,246 in Fiscal Year 2022 (a 26% increase). The $66,120 in annual support provided by the Town of Addison represents 0.5% of Metrocrest's Fiscal Year 2022 Annual Budget and will cover approximately 14.6% (down from 25% - 30% pre-pandemic) of the costs to serve Addison residents. The cost for Metrocrest to serve Addison residents is in Fiscal Year 2022 will be approximately $450,000.

Mr. Hawley reviewed that Metrocrest directly and indirectly benefits Addison families through the food pantry; job skills training; rental assistance to avoid evictions; and by providing senior programs. In addition to these visible benefits, Metrocrest Services provides jobs in the community; volunteer and networking opportunities; contributes to a sense of community; reduces the demand on public safety and other governmental resources; and prevents local governments from having to provide these services directly.

Mr. Hawley advised that Metrocrest Services' planned Community Support Facility ($15.8M project) is slated to open in the spring of 2023 and is expected to see a significant increase in the number of residents served. The total number of residents served is projected to increase from 12,806 in Fiscal Year 2019 (pre-pandemic) to a 40,331 in Fiscal Year 2023 (a 214% increase). Much of this increase will come from expanded food programs as well as more robust employment related programs.

Deputy Mayor Pro Tempore Walden expressed that while he is supportive of Metrocrest Services and the role they play in the Town of Addison, he does not agree with providing funding toward a new building. He advised that in his opinion this would be a donation and not services assistance and would set a precedence; Council Member Willesen spoke in agreement, stating he would not support funding for a facility.

Council Members Braun, Ward and Wheeler spoke in favor of the request, as well as Mayor Chow and Mayor Pro Tempore Quintanilla.

President and CEO of Metrocrest Services, Tracey Eubanks addressed the Council. He expressed his appreciation for Addison's support of the organization and provided his vision and plans for the new facility.

City Manager Wes Pierson reminded Council that if this was approved, funding would come from federal funds received by the Town and not from local taxpayer dollars. He advised that an item will be included on a January 2022 Council agenda to consider action.

*** * * * PROCLAMATION * * * ***

**Announcements and Acknowledgements regarding Town and Council Events and Activities**

- **Presentation of Proclamation to Don and Barbara Daseke**

Following this discussion, Mayor Chow read and presented a proclamation to Addison residents Don and Barbara Daseke for their service in the community.

## 2. Present and Discuss Draft Updates to the Commercial Vehicle Parking Ordinance.

Police Chief Paul Spencer presented this item. He advised that commercial parking complaints, especially within multifamily residential areas, have become a more frequent FixIT App request to the Town. In response to these requests, the Addison Police Department has identified the need to update the ordinance to support enforcement activities. He reviewed the current regulations addressing commercial vehicle parking in residential areas as follows:

> **Sec. 78-175** - Overnight parking of trucks and buses with more than three-quarter ton rated capacity within certain zones prohibited.
>
> (a) It shall be unlawful and an offense for any person to park overnight, or between the hours of midnight and 6:00 a.m., any truck-tractor, road-tractor, semitrailer, bus, truck, or trailer, when such truck or trailer has a manufacturer's rated capacity in excess of three-fourths ton upon property within any area zoned as either single-family, duplex or multiple-family district zoning under the zoning ordinance of the Town.
> (b) This section shall not prevent the parking or standing of the vehicles described in subsection (a) of this section in such zoned areas for the purpose of expeditiously loading and unloading passenger, freight, or merchandise.

Chief Spencer added that another component of the issue is related to the Storage ordinance as follows:

> Sec. 78-286. - Storage.
>
> (a) A person in a residentially zoned area shall not place, store or maintain on his driveway, side yard or front yard, for a continuous period in excess of 24 hours, a mobile home, recreational vehicle, boat, trailer, camper, dismantled or inoperative truck or motor vehicle. For the purpose of this subsection, "side yard" means an open, unoccupied space on the same lot with a building, situated between the building and sideline of the lot and extending through from the front yard to the rear yard. For the purpose of this subsection, "front yard" means the portion of a lot or tract which abuts a street and extends across the width of the lot or tract between the street and the main building.
> (b) It shall be a defense to prosecution under subsection (a) of this section if the prohibited item is enclosed in a building or structure, or concealed from view by a fence, shrubs or other landscaping.

Chief Spencer presented photographic examples of vehicles that would be in violation of the ordinance as well as of those that would not be in violation of the ordinance.

Chief Spencer advised that in Addison, most housing developments are zoned Planned Development, Urban Center or Mixed Use Residential District. This conflicting language difference (specific zoning districts vs. the general residential land uses referenced in Sec. 78-175) prompted a request for assistance from the City Attorney to determine if the Town has the legal authority to enforce Section 78-175 as written. The City Attorney agreed the language is problematic and initiated work on recommended updates to ensure the intent of the ordinance can be achieved.

Chief Spencer requested feedback on this specific ordinance provision and any other policy considerations related to this issue. Considerable discussion among Council followed. City Manager Pierson reviewed that changes to the ordinance would include the weight of allowable vehicles changing from ¾ ton to 1 ton, and the "storage" regulations would include multi-family zoning.

*** * * * RECESS * * * ***

# REGULAR MEETING

**Discussion of Events/Meetings**

**Public Comment:** *The City Council invites citizens to address the City Council on any matter, including items on the agenda, except public hearings that are included on the agenda. Comments related to public hearings will be heard when the specific hearing starts. Citizen comments are limited to* ***three (3) minutes****, unless otherwise required by law. To address the Council, please fill out a* ***City Council Appearance Card*** *and submit it to a staff member prior*

*to the Public Comment item on the agenda. The Council is not permitted to take any action or discuss any item not listed on the agenda. The Council may choose to place the item on a future agenda.*

Mayor Chow called those completing an Appearance Card to the podium to address the City Council. Those requesting to speak were:

- Against proposed outdoor fitness/exercise facility: Valerie Collins, 14668 Wayside Court; Dudley Watson, 1462 Wayside Court; Kristen Wallach, 14669 Wayside Court; Paul Connelly (written).

---

**Consent Agenda:** *All items listed under the Consent Agenda are considered routine by the City Council and will be enacted by one motion with no individual consideration. If individual consideration of an item is requested, it will be pulled from the Consent Agenda and discussed separately.*

**3. Consider Action on the Minutes from the October 26, 2021 City Council Meeting.**

**4. Consider Action on the Minutes from the November 9, 2021 City Council Meeting.**

**5. Consider Action on an Ordinance Approving the Abandonment of a Drainage Easement within the Vitruvian West Development.**

**6. Consider Action on a Resolution Approving an Agreement for Professional Services Between the Town of Addison and Dunaway Associates, LLC. for Contract GIS Staffing and Authorizing the City Manager to Execute the Agreement in an Amount Not to Exceed $87,000.**

**7. Consider Action on a Resolution Approving an Economic Development Program Grant Agreement with Mexico Foods LLC (d/b/a El Rancho, Inc.) and Authorizing the City Manager to Execute the Agreement in an Amount Not to Exceed $50,000.**

**8. Consider Action on a Resolution Approving a Professional Engineering Services Agreement Between the Town of Addison and Kimley-Horn and Associates for Design Support During Construction in Connection with Certain Traffic Signal and Intersection Improvements and Authorizing the City Manager to Execute the Agreement in an Amount Not to Exceed $95,000.**

**9. Consider Action on an Ordinance Amending Chapter 58, Parks and Recreation, of the Code of Ordinances by Providing Updated Definitions, a New Park Use Permit Requirement, Related Fees, and for Civil and Criminal Penalties.**

Mayor Chow asked if there were any requests to remove an item from the Consent Agenda for separate discussion. There were none.

**MOTION**: Council Member Braun moved to approve the Consent Agenda as presented. Council Member Willesen seconded the motion. Motion carried unanimously.

**Ordinance No. O21-43:** Abandon Drainage Easement, Vitruvian West
**Resolution No. R21-086:** Dunaway Associates LLC Agreement for GIS Staffing
**Resolution No. R21-087:** EDC Grant Agreement-Mexico Foods, LLC dba El Rancho, Inc.
**Resolution No. R21-088:** Agreement Kimley-Horn & Associates-Design Support for Construction of Traffic Signal and Intersection Improvements.
**Ordinance No. O21-44:** Amend Code of Ordinances Chapter 58, Parks and Recreation

**Regular Items**

**10. Present, Discuss and Consider Action on a Resolution Appointing Four (4) Members to Serve on the Planning & Zoning Commission for Two-Year Terms Commencing January 1, 2022 and Providing an Effective Date.**

City Secretary Irma Parker advised the Council that four members of the Planning and Zoning Commission in Places 4, 5, 6, and 7 have terms expiring on December 31, 2021. All current Commission members were notified that their terms are expiring and were asked to complete and submit a new application if interested in being reappointed. The application was available to all residents on-line. The deadline for interested persons to apply was November 30th. City Council members were provided with a complete list of applicants and their respective applications. Ms. Parker noted that current Chair, Eileen Resnik, did not request re-appointment. The following Council appointments were made:

| PLACE | NAME | APPOINTED BY |
|---|---|---|
| 4 | Robert Catalani | Tom Braun |
| 5 | Juli Branson | Lori Ward |
| 6 | Chris DeFrancisco | Joe Chow |
| 7 | Tom Souers | Kathryn Wheeler |

**MOTION**: Deputy Mayor Pro Tempore Walden moved to approve the appointments for Planning and Zoning Commission. Mayor Pro Tempore Quintanilla seconded the motion. Motion carried unanimously.

**Resolution No. R21-089:** Appoint Planning and Zoning Commission Members

**11. Present, Discuss, and Consider Action on a Resolution Appointing Four (4) Members to Serve on the Board of Zoning Adjustment for Two-Year Terms Commencing January 1, 2022 and Providing an Effective Date.**

Irma Parker presented this item. She advised the Council that four members of the Board of Zoning Adjustment in Places 4, 5, 6, and 7 have terms expiring on December 31, 2021. All current Commission members were notified that their terms are expiring and were asked to complete and submit a new application if interested in being reappointed. The application was available to all residents on-line. The deadline for interested persons to apply was November 30th. City Council members were provided with a complete list of applicants and their respective applications. Ms. Parker advised that current members Gary Krupkin in Place 6 and Ed Copeland in Place 4 had listed Planning and Zoning as their first choice, and that J.T. McPherson who currently serves in Place 7 is not seeking reappointment. The following Council appointments were made:

| PLACE | NAME | APPOINTED BY |
|---|---|---|
| 4 | Ed Copeland | Tom Braun |
| 5 | Jeannie Dunlap | Lori Ward |
| 6 | Gary Krupkin | Joe Chow |
| 7 | Precious Urenna Onyewuchi | Kathryn Wheeler |

**MOTION**: Council Member Ward moved to approve the appointments for Board of Zoning Adjustment. Council Member Wheeler seconded the motion. Motion carried unanimously.

**Resolution No. R21-090:** Appoint Board of Zoning Adjustment Members

**12. Present, Discuss and Consider Action on a Resolution Appointing Individuals to Serve on the Community Partners Bureau for Three-Year Terms Commencing January 1, 2022 and Providing an Effective Date.**

City Secretary Irma Parker presented this item. She reviewed that historically, the City Council considers Community Partners Bureau (CPB) appointments during the last quarter of each calendar year. Notifications were made to the community informing individuals interested in serving on the CPB to apply. Current members were advised that their appointments would be expiring and were advised to apply if they wished to continue service to their organization. The application deadline was Tuesday, November 30, 2021.

Ms. Parker reviewed that at the December 12, 2020 City Council meeting CPB appointments were presented for Council action. This item was tabled, and no action taken due a proposed re-write of the organization's policy and procedure. On January 26, 2021, the CBP Policy was approved via Resolution No. R21-005. Appointments were made to the CBP in subsequent action and adopted as Resolution No. R21-007.

Ms. Parker advised the City Council that terms are expiring for Place 1 (Woven Health Clinic) and Place 4 (The Dallas Cat Lady). Appointments may be made for full 3-year terms if Council chooses. Place 2 (The Family Place) has resigned; that position expires on 12/31/2022. Council can choose to appoint someone to the unexpired term or set another date since the new policy authorizes individuals to be appointed to 1, 2, or 3 years with no term limits with. Historically all committees have historically had staggered terms. After discussion, Council agreed to appoint a citizen to fulfill the unexpired term for Place 2.

Ms. Parker noted that the draft Resolution acknowledges and names the organizations currently being funded through FY 2022-2023. This additional language will allow the City Council to make future additions or deletions to the organizations receiving funding in a future budget cycle.

Following discussion of the applicants and the policy and procedure as it relates to appointments, the following appointments were made:

| PLACE | NAME | EXPIRATION DATE | PARTNER |
|---|---|---|---|
| 1 | Susie Oliver | 12/31/2024 (3-years) | Woven Health Clinic |
| 2 | Gail LaVine | 12/31/2022 (fulfill unexpired term) | The Family Place |
| 4 | Karen Perry | 12/31/2024 (3-years) | Dallas Cat Lady |

**MOTION**: Mayor Pro Tempore Quintanilla moved to approve appointments as discussed. Council Member Willesen seconded the motion. Motion carried unanimously.

**Resolution No. R21-091:** Appoint Community Partners Bureau Members

**13. Hold a Public Hearing, Present, Discuss, and Consider Action on an Ordinance for a 5.1-acre Property Located at the Southeast Corner of Spring Valley Road and Vitruvian Way, Currently Zoned Planned Development (PD) through Ordinance No. O07-034 (as amended), to Amend the Concept Plan and Providing for Approval of a Development Plan with Waivers to the Development Standards, Including but not Limited to, Street Build-To Line, Exterior Building Material and Building Color Standards for a Multi-Family Development Comprised of 85 Dwelling Units and Associated Amenity Space. Case 1839-Z/Vitruvian Townhomes.**

Ken Schmidt, Director of Development Services, presented this item. He advised this item is a request to amend the current approved concept plan for this property, which allows for 368 urban multi-family units, for a lesser density project and includes waivers to the design standards for multi-family development. The project is on 5.1 acres located at the southeast corner of Spring Valley Road and Vitruvian Way and north of Bella Lane.

Mr. Schmidt advised the request is for 85 multi-family dwelling units designed as three-story townhomes. He advised each unit will front on a public street or private open space and will have ground floor access through a private patio area or stoop. An eight foot wide trail is planned on the east side of the site and in accordance with the Town's Master Tails Plan, and on Bella Lane, there will be a six foot wide trail. An amenity center will be situated at the Vitruvian Way entry. Access to the site will be at Bella Lane and Vitruvian Way with emergency access at Spring Valley.

The townhomes will have one, two and three bedrooms and range from 1,500 to 2,228 square feet. Each unit will have a two-car garage with interior access to the unit. Mr. Schmidt noted that open space, landscape and streetscapes meet requirements. He advised that the private patio areas for each unit will include artificial turf.

The proposed exterior building materials include stucco, brick, fiber cement siding and architectural metal. Mr. Schmidt noted that the use of four exterior materials exceed the Planned Development (PD) requirements, which states a maximum of three, and would need to be waived. White paint as a primary color on building exteriors was requested, which would also require a waiver. Additionally, the PD requirements state that balcony or patio enclosures are required to be constructed of wrought iron or metal and the applicant is requesting the use of stucco.

Mr. Schmidt advised that due to the curvature of Vitruvian Way, a "street build-to line" waiver is requested. He advised that the building would exceed nine feet from the street tree planting zone

and would include additional landscape in that area for visual interest. He noted that a dog run is included along a portion of the trail.

Mr. Schmidt advised that the Planning and Zoning Commission voted to recommend approval of the revised concept plan with waivers on a vote of 6-0; one member recused themself due to a Conflict of Interest. He advised that six public hearing notices were mailed to adjacent property owners with no responses received.

Mr. Schmidt advised that staff is recommending approval of this request with the following waivers included:

- The street build-to-line for Vitruvian Way may exceed 9 feet.
- The maximum number of façade materials may be four instead of three.
- Stucco façade materials shall be categorized as masonry construction.
- White shall be permitted and categorized as a primary façade color; and
- Masonry shall be a permitted alternative to wrought iron or metal fencing for patio enclosure construction.

He requested Council provide direction as well on the white color on the exterior and recommended they specify "snowbound" as the color of the white exterior.

Council Member Walden inquired about the use of stucco. Council Member Braun responded that as long as the stucco is cement-based plaster it should be durable.

Discussion on the use of turf and associated maintenance followed. It was noted that the use of turf in the patio areas does not impact the landscape requirements. City Manager Pierson advised that previously a pilot program involving the use of turf in Addison Circle was approved and has not proven to have issues to date.

Mayor Chow opened the public hearing.

Robert St. John, representing UDR, was present for questions. Council Member Ward inquired about the price point of the rentals. He responded that they would range from $2,500 to $3,500 per month with construction expected to start May 2022 and take 14 to 16 months to complete.

Mayor Chow closed the public hearing.

**MOTION**: Council Member Ward moved to approve as stated in the proposed ordinance, including the recommended waivers and utilizing "snowbound" as the white paint color. Council Member Braun seconded the motion. Motion carried unanimously.

**Ordinance No. O21-45:** Planned Development Amendment at Spring Valley Road and Vitruvian Way, Case 1839-Z/Vitruvian Townhomes

**14. Hold a Public Hearing, Present, Discuss, and Consider Action on an Ordinance for Property Located at 14450 Marsh Lane, Currently Zoned Local Retail (LR), for a**

**Special Use Permit (SUP) to Allow a Day Nursery. Case 1842-SUP/14450 Marsh Lane (Tierra Encantada).**

Ken Schmidt, Director of Development Services, presented this item. He advised this request is for a Special Use Permit for a day nursery. The location is currently zoned Local Retail and most recently this vacant building was used as an adult education facility. Mr. Schmidt advised the applicant is Tierra Encantada Spanish Immersion Childcare & Preschool, a franchise with six existing locations in several states. It opened its first location in 2013 and is expected to open two locations in the Houston area. Tierra Encantada offers childcare for children ranging from six weeks to six years of age with a focus on bilingual education that fosters early cognitive development and diversity within a curated curriculum.

Mr. Schmidt advised the 10,599 square feet floor plan will accommodate ten classrooms for various age ranges, (infant, toddler, and preschool) and supporting area which includes an indoor playroom, kitchen, administrative offices, and a breakroom. It is anticipated that there will be a maximum of 153 students and 27 staff members. There are two outdoor playground areas on the north side and west side of the building that will be resurfaced with poured safety surface and playground equipment.

Mr. Schmidt advised that while there are no specific parking regulations, the site does have 89 spaces which is more than adequate for this use. Some upgrades to the exterior façade are planned. Landscape improvements were described.

Mr. Schmidt advised public notices were provided to the six adjacent property owners with no responses. He advised that the Planning and Zoning Commission met on November 16, 2021 and recommended approval with conditions as follows:

- The existing SUP Ordinance No. O95-043 and amending SUP Ordinance No. O99-022 are repealed upon issuance of a Certificate of Occupancy for the proposed use.
- The applicant shall provide staff with proof of state childcare license prior to issuance of a Certificate of Occupancy.
- The facility perimeter fence is increased to a minimum of 6 feet in height.

Council Member Braun expressed concern for potential traffic issues on Marsh during drop off and pick up times. He inquired if the Town could include a requirement for an operations plan that would address this possibility. Mayor Chow responded that with 89 parking spaces on site that would unlikely be an issue.

Mayor Chow opened the public hearing.

Kristen Denzer, CEO, Tierra Encatada Daycare & Preschool, was available telephonically to answer questions. She advised that there should be no traffic stacking issues because parents must park and come in to drop off and pick up their children. She added that the condition of providing staff with proof of state childcare licensing prior to issuance of a Certificate of Occupancy is problematic because the state requires the Certificate of Occupancy prior to issuing the license.

Mr. Schmidt advised the Town could issue a Temporary Certificate of Occupancy that would suffice.

Mayor Chow closed the public hearing.

**MOTION**: Council Member Ward moved to approve as submitted with the added condition that a traffic operations plan be submitted. Deputy Mayor Pro Tempore Walden seconded the motion. Motion carried unanimously.

**Ordinance No. O21-46:** Approval of Special Use Permit for Day Nursery, Case 1842-SUP/14450 Marsh Lane (Tierra Encantada) with conditions.

**15. Hold a Public Hearing, Present, Discuss, and Consider Action on an Ordinance for Property Located at 14854 Montfort Drive, Currently Zoned Planned Development (PD) through Ordinance No. 084-076, for a Special Use Permit (SUP) to Allow a Restaurant with the Sale of Alcoholic Beverage for On-Premises Consumption. Case 1841-SUP/14854 Montfort Drive (TK's Place).**

Ken Schmidt, Director of Development Services, presented this item. He advised this request is for a Special Use Permit for a restaurant with on-premises consumption of alcohol. The site is located at 14854 Montfort Drive, located on the same property as the Blue Mesa restaurant and Prestonwood Pond office building. The building is vacant and most recently was occupied by the restaurant, Public School 972. Mr. Schmidt advised that the proposed floor plan shows use of 12,557 square feet, inclusive of an 1,830 square foot outdoor patio area. The restaurant will primarily utilize the first floor, which accommodates seating for 125 patrons, inclusive of the patio and the bar area at the center of the restaurant. The remainder of the first floor will consist of a service counter, prep area, and cooler storage. The basement level will be used for an additional dining area for private dining events and storage. A new bar will also be constructed, accommodating seating for 73 patrons on the basement level. Mr. Schmidt advised that the primary focus of the business is a restaurant, but it will have stand-up comedy shows.

TK's Place will require 126 parking spaces. Shared parking on the site accommodates 460 vehicles, which is one short of the required 461 spaces. Mr. Schmidt explained that some of the landscaping would be replaced.

The Planning and Zoning Commission approved this request on December 7, 2021 with a vote of 7-0 and the following conditions:

- The applicant shall not use any terms or graphic depictions that relate to alcoholic beverages in any exterior signage
- SUP Ordinance (O15-014) is repealed upon issuance of a Certificate of Occupancy for the proposed use

Mayor Chow opened the public hearing.

Applicants TK and Kara Matteson were present for questions. They introduced themselves and described their business model.

Mayor Chow closed the public hearing.

**MOTION**: Deputy Mayor Pro Tempore Walden moved to approve. Council Member Willesen seconded the motion. Motion carried unanimously.

**Ordinance No. O21-47:** Specific Use Permit for Restaurant, Case 1841-SUP/14854 Montfort Drive (TK's Place)

**16. Present, Discuss, and Consider Action on an Ordinance Granting a Meritorious Exception to Chapter 62 of the Code of Ordinances for Galaxy FBO, Located at 15601 Addison Road, in Order to Exceed the Total Effective Area and the Maximum Allowable Logo Height for an Attached Sign. Case MR2021-007/Galaxy FBO.**

Ken Schmidt, Director of Development Services, presented this item. He advised Galaxy FBO is a private corporate and general aviation facility currently under construction on Addison Airport property at the southwest corner of Addison Road and George Haddaway Drive. During the review of the sign permit application for this new facility, staff determined that a proposed attached wall sign facing towards Addison Road did not comply with the Town's sign code due to the logo height and effective area of the attached sign. Mr. Schmidt explained that the Town's sign ordinance limits the attached wall sign letter/logo height to 24 inches, with up to 50 percent of the letters and logos not to exceed 25 percent of the maximum (30 inches). This sign includes a logo and 9 letters, with only three letters being greater than 24 inches and less than 30 inches in height. The Galaxy FBO logo exceeds the 30 inch maximum logo height.

Mr. Schmidt added that the Town's sign ordinance limits the effective sign area for a building. The effective area is defined by the overall height and width of the entire sign. Due to the logo placement above the sign lettering, the overall height of the sign is 6.8 feet, and the sign width is 15 feet, resulting in an effective area of 102.11 square feet.

Mr. Schmidt advised that after consideration, Galaxy FBO elected to pursue a Meritorious Exception to the sign code. Galaxy FBO is requesting specific exceptions to the following:

- Exceeding the maximum 30-inch logo height by 16 inches.
- Exceeding the 100 square feet maximum effective sign area by 2.11 square feet. The Town's sign ordinance defines effective area as the area enclosed by drawing a rectangle of horizontal and vertical lines which fully contain all extremities of the sign drawn to scale.

The applicant is pursuing a Meritorious Exception to the sign ordinance in accordance with code provisions from Section 62-33 of the Code of Ordinance. Staff believes that the hardship criteria of the Meritorious Exception requirements is met due to the size and orientation of the building and the design of the Galaxy FBO brand.

General discussion among Council followed. The Applicant was available for questions.

**MOTION**: Council Member Braun moved to approve. Council Member Willesen seconded the motion. Motion carried unanimously.

**Ordinance No. O21-48:** Meritorious Exception, 15601 Addison Road, Galaxy FBO

**17. Present and Discuss the Operations and Financial Reconciliation for Addison Oktoberfest 2021.**

Jasmine Lee, Director of Special Events, presented this item. She provided an overview of changes that were made in 2021 for this annual event. She advised that paid advertising for the event totaled $75,420 and in-kind advertising and public relations was valued at $5,622,447.

Ms. Lee advised that 443 hotel room packages were sold that included two free adult admission tickets, which is a 25 percent increase over 2019.

Accounting Manager Ashley Boatright reviewed the revenues and expenditures for the event as shown below:

| | | |
|---|---|---|
| Total Revenues | $524,597 | Includes Sales & Commission, Sponsorships, Vendor Fees & Rentals, and Miscellaneous |
| Total Expenses | $769,266 | Included Contractual Services, Rent, Payroll, Security, Entertainment, Weather Insurance, Steins, and Miscellaneous |

A four-year comparison of total Food and Beverage Sales, Attendance, and Profit & Loss was provided.

Ms. Lee advised that attendees were surveyed with 746 responses received. The primary attractions for attendees were the food and beer and wine selections. The overall rating of the event was "Excellent."

Ms. Lee advised that for 2022 the focus will include the following:

- Maintain the new Partyhalle open layout and maximize use of the new stage design for continuous entertainment.
- Expand food selection to include even more German options.
- Work with Marketing to develop ways to attract first-time visitors.
- Develop special merchandise and activities to celebrate the 35th Addison Oktoberfest in 2022.

Several Council Members offered positive comments as well as suggestions for future events regarding the food and drink options, use of QR codes, and the overall layout of the event.

**18. Present, Discuss and Consider Action on a Resolution Approving an Agreement with Moore Iacofano Goltsman, Inc. (MIG) for Professional Engineering Services for Conceptual Design of the Addison Beltway Drive Trail Project; Authorizing the City Manager to Execute the Agreement in an Amount Not to Exceed $65,998.00.**

Jana Tidwell, Director of Parks and Recreation, presented this item. She reviewed that the City-Wide Trails Master Plan (CWTMP) was adopted by Council on May 25, 2021. The plan identified Phase I projects that are recommended to be completed within 0-5 years of the date of adoption. The development of a trail system along Beltway Drive between Marsh Lane and Belt Line Road is included in the Plan's Phase I recommendations. These recommendations were based on community input which indicated a need for bike lanes, improved internal circulation in neighborhoods and a desire to make neighborhood connections to regional trails. The CWTMP recommends the following trail improvements along Beltway Drive:

- Buffered Bike Lanes between Marsh Lane and Midway Road.
- Bike Boulevard between Midway Road and Belt Line Road.
- Wide Sidewalk with Buffer from the Redding Trail heading east to Belt Line Road.

Ms. Tidwell advised that in addition to the proposed trail improvements for Beltway Drive, the CWTMP also recommends the development of a Trail Signage and Wayfinding Standards. Development of these standards is included in the scope of the Beltway Drive Trail Project. Once developed, the Trail Signage Wayfinding Standards will also be applied to all future trail signage projects. The project also includes Linear Open Space Planning of the area south of Addison Grove, referred to as Sam's Park, to improve connectivity and to refresh the green space. Other tasks in the project will be to establish what portions of existing sidewalk should remain and be integrated into the trail system and what portions should be removed and replaced to meet the trail typologies defined in the CWTMP.

Ms. Tidwell presented graphic depictions of Bike Boulevards, Buffered Bike Lanes, and Sidewalks with Buffers. She reviewed the planned timetable for this project. It was noted that if grant funding is used for construction of the trail, then construction would likely begin in 2024.

Ms. Tidwell advised that Council approved $66,000 in the Fiscal Year 2022 Budget for Conceptual Design of the Beltway Drive Trail Project. Staff has selected Moore Iacofano Goltsman (MIG), the firm that developed the CWTMP, as the most qualified team to complete the conceptual design of the project. MIG is listed in the Town's pre-qualified consultant pool. MIG's proposal includes Public Engagement Strategies and Cost Estimating in addition to the development of the Conceptual Design for the project.

Deputy Mayor Pro Tempore Walden inquired about the maintenance of lane markings and the position of the trail along the area of Sam’s Park. Ms. Tidwell responded that the Public Works staff will be involved in the materials selection for the lane markings. She also advised that the trail positioning could meander along the park and then connect to the sidewalk at the ends.

Mayor Pro Tempore Quintanilla commented on the section of the trail that is positioned between Redding Trail and Addison Grove. Ms. Tidwell advised that MIG has a traffic engineer who will be involved in evaluation of this area. City Manager Pierson added that the plans presented tonight are concept plans and are likely to change somewhat during the design and with public feedback.

**MOTION**: Mayor Pro Tempore Quintanilla moved to approve. Deputy Mayor Pro Tempore Walden seconded the motion. Motion carried unanimously.

**Resolution No. R21-092:** Engineering Services Agreement with Moore Iacofano Goltsman, Inc. for Conceptual Design of the Addison Beltway Drive Trail Project and the Trail Signage and Wayfinding Standards Development

**19. Consider Action on a Resolution Approving the Town's Participation in the State of Texas' Opioid Litigation Settlement and Adopting the Texas Term Sheet.**

Bill Hawley, Director of Administrative Services, presented this item. He advised this item is to confirm the Town's participation in the state of Texas' Opioid Litigation Settlement. He advised that two proposed nationwide settlement agreements have been reached that would resolve all opioid litigation brought by states against pharmaceutical distributors and one manufacturer. If the Town elects to participate in the settlement, it would be allocated approximately $58,094. Examples of uses for the funds include expanded training and supplies for first responders, opioid related treatment programs, and opioid prevention programs.

**MOTION**: Council Member Ward moved to approve. Council Member Wheeler seconded the motion. Motion carried unanimously.

**Resolution No. R21-093**: Participation in the State of Texas' Opioid Litigation Settlement

---

# EXECUTIVE SESSION

***Continued***

**Closed (Executive) Session of the Addison City Council pursuant to:**

**Section 551.071, Texas Government Code, to conduct a private consultation with its attorney pertaining to:**

- Bigelow Arizona TX-344, Limited Partnership D/B/A Suites of America and/or Budget Suites of America v. Town of Addison, Cause No. DC-19-09630, 191st Judicial District, Dallas County District Court.

- G J Seeding, LLC v. FNH Construction, LLC and Hudson Insurance Company, Cause No. DC-20-11409, 134th Judicial District, Dallas County, Texas.

Mayor Chow closed the Open Session to convene the City Council into Closed Executive Session at 11:25 p.m.

**Reconvene into Regular Session: In accordance with Texas Government Code, Chapter 551, the City Council will reconvene into Regular Session to consider action, if any, on matters discussed in Executive Session.**

Mayor Chow reconvened the City Council into Open Session at 12:17 a.m. No action was taken as a result of Executive Session.

**Adjourn Meeting**

There being no further business to come before the Council, Mayor Chow adjourned the meeting.

**TOWN OF ADDISON, TEXAS**

_____
Joe Chow, Mayor

**ATTEST:**

_____
Irma G. Parker, City Secretary

**Council Meeting** **3.**

**Meeting Date:** 01/11/2022

**Department:** Development Services

**Pillars:** Excellence in Transportation Systems

---

**AGENDA CAPTION:**

Consider Action on an **Ordinance Approving the Dedication of Public Right-of-Way for the Extension of Bella Lane**.

**BACKGROUND:**

At the September 22, 2020 City Council meeting, the City Council approved an Interlocal Agreement (ILA) between the Town of Addison, Dallas County Community College (DCCCD), and the City of Farmers Branch to facilitate the construction of the Bella Lane extension from the Vitruvian development through Brookhaven College to Alpha Road.

In order to initiate this planned extension of Bella Lane, DCCCD and the Vitruvian development agreed to dedicate right-of-way to the City of Farmers Branch and the Town of Addison. This proposed 1.337 acre right-of-way dedication is needed for the portion of this project within Town limits.

**RECOMMENDATION:**

Administration recommends approval.

---

**Attachments**

Ordinance - Bella Lane Easement Dedication Acceptance

Map - Bella Lane Extension

---

**ORDINANCE NO. _____**

**AN ORDINANCE OF THE TOWN OF ADDISON, TEXAS, APPROVING THE CITY'S ACCEPTANCE OF A PUBLIC STREET RIGHT-OF-WAY AND GENERAL UTILITY EASEMENT FOR A 1.337 ACRE TRACT OF LAND FROM GRANTOR VPDEV 2, LLC IN CONNECTION WITH THE EXTENSION OF BELLA LANE; AUTHORIZING RECORDING OF THE SAME IN THE OFFICIAL PUBLIC RECORDS OF DALLAS COUNTY, TEXAS; AND PROVIDING AN EFFECTIVE DATE.**

**WHEREAS**, the City Council for the Town of Addison, Texas, deems it necessary and in the best interests of the public to acquire the hereinafter described public street right-of-way and general utility easement from VPDEV 2, LLC, grantor and owner of the underlying fee title thereto, for use in connection with the extension of Bella Lane.

**NOW THEREFORE, BE IT ORDAINED BY THE CITY COUNCIL OF THE TOWN OF ADDISON, TEXAS:**

**SECTION 1.** The Town of Addison, Texas ("City") hereby approves the acquisition of the public street right-of-way and easement described in the Public Street Right-of-Way and General Utility Easement attached hereto incorporated herein as **Exhibit "A"**, it being the intent of the City to acquire the foregoing for the public purpose of extending Bella Lane across a portion of the 15.173 acre tract of land owned by VPDEV 2, LLC, as more particularly described in **Exhibit "A"**. The City Manager is authorized to accept the foregoing public right-of-way and easement, which shall be recorded in the official public records of Dallas County, Texas.

**SECTION 2.** This Ordinance shall become effective from and after its passage.

**PASSED AND APPROVED** by the City Council of the Town of Addison, Texas, on this the ***11th*** day of ***JANUARY 2022*.**

**TOWN OF ADDISON, TEXAS**

_____
Joe Chow, Mayor

**ATTEST:**

_____
Irma Parker, City Secretary

**APPROVED AS TO FORM:**

_____
Whitt Wyatt, City Attorney

# EXHIBIT A

**NOTICE OF CONFIDENTIALITY RIGHTS: IF YOU ARE A NATURAL PERSON, YOU MAY REMOVE OR STRIKE ANY OR ALL OF THE FOLLOWING INFORMATION FROM ANY INSTRUMENT THAT TRANSFERS AN INTEREST IN REAL PROPERTY BEFORE IT IS FILED FOR RECORD IN THE PUBLIC RECORDS: YOUR SOCIAL SECURITY NUMBER OR YOUR DRIVER'S LICENSE NUMBER**

**PUBLIC STREET RIGHT-OF-WAY**
**AND GENERAL UTILITY EASEMENT**

**STATE OF TEXAS** §
§ **KNOW ALL MEN BY THESE PRESENTS:**
**COUNTY OF DALLAS** §

That **VPDEV 2, LLC** ("**Grantor**"), a Delaware limited liability company, whose mailing address is 1745 Shea Center Drive, Suite 200, Highlands Ranch, Colorado, 80129, for and in consideration of the sum of **TEN AND NO/100 DOLLARS ($10.00)** and other good and valuable consideration in hand paid by the **TOWN OF ADDISON , TEXAS** ("**Grantee**"), a Texas home rule municipality whose mailing address is 5300 Belt Line Road, Addison, Dallas County, Texas, 75254, the receipt and sufficiency of which consideration is hereby acknowledged, has **DEDICATED, GRANTED, SOLD AND CONVEYED**, and by these presents does **DEDICATE, GRANT, SELL AND CONVEY** unto Grantee an easement for public street right-of-way purposes, including the passage of vehicular and pedestrian traffic, and the use, construction, reconstruction, installation, inspection, repair, maintenance, opening, closing, and removal of a public street, public utilities (including water, sanitary sewer, natural gas, and telecommunications), drainage facilities, landscaping, signs, and other uses of a public street as Grantee may find necessary or appropriate or which are customary or incidental thereto, (collectively, "the **Easement Purposes**") on, over, under, and through all that certain real property located in the County of Dallas, State of Texas, described as follows:

> **Being a 1.337 acre tract of land situated in the Noah Good Survey, Abstract No. 520, City of Addison, Dallas County, Texas, and being a part of the 15.173 acre tract of land conveyed to VPDEV 2, LLC, by Special Warranty Deed of record in Instrument No. 201300203008 of the Official Public Records of Dallas County, Texas, and being a part of Lot 3, Block A, Vitruvian Park Addition, an addition to the City of Addison, Dallas County, Texas, according to the plat thereof recorded in Instrument No. 20130219333, of said Official Public Records; and being more particularly described by metes and bounds in Exhibit "A," and depicted on Exhibit "B," attached hereto and incorporated herein by reference (the "Easement Property").**

**TO HAVE AND TO HOLD** the Easement Property for the Easement Purpose unto Grantee, its successors and assigns, forever, and Grantor does hereby bind itself, its successors and assigns, to warrant and forever defend, all and singular, the said premises unto Grantee, its successors and assigns, against every person whomsoever lawfully claiming or to claim the same or any part thereof when the claim is by, through, or under Grantor but not otherwise; provided, however, that this Easement and Grantee's right to use the Easement Property for the Easement Purpose shall terminate upon abandonment of the Easement Property, or the cessation of use of

# EXHIBIT A

the Easement Property as a public roadway by Grantee, which abandonment or cessation shall be deemed to occur only upon, adoption by Grantee's City Council of an ordinance abandoning or ceasing use of the Easement Property as a public roadway.

SIGNED and effective this _____ day of _____, 2022.

**FOR GRANTOR:**

VPDEV 2, LLC
a Delaware limited liability company

By: DCO Realty, Inc.
a Delaware corporation
Its: Managing Member

By: _____

Name: _____

Title: _____

STATE OF TEXAS §
§
COUNTY OF DALLAS §

Acknowledged before me, the undersigned authority, this ___ day of _____, 2022, by _____, as authorized agent for and on behalf of said Grantor.

_____
Notary Public, State of Texas
Commission Expires: _____

# EXHIBIT A

## EXHIBIT "A"
## Description of Public Street Right-of-Way and General Utility Easement

**LEGAL DESCRIPTION**
**PROPOSED BELLA LANE RIGHT-OF-WAY DEDICATION – 1.337 ACRES**
**BEING PART OF LOT 3, BLOCK A VITRUVIAN PARK ADDITION**
**NOAH GOOD SURVEY, ABSTRACT NO. 520**

BEING a 1.337 acre tract of land situated in the Noah Good Survey, Abstract No. 520, City of Addison, Dallas County, Texas, and being aa part of the 15.173 acre tract of land conveyed to VPDEV 2, LLC, by Special Warranty Deed of record in Instrument No. 201300203008 of the Official Public Records of Dallas County, Texas, and being a part of Lot 3, Block A, Vitruvian Park Addition, an addition to the City of Addison, Dallas County, Texas, according to the plat thereof recorded in Instrument No. 20130219333, of said Official Public Records; said 1.337 acre tract being more particularly described as follows:

BEGINNING at a found 5/8" iron rod with a yellow plastic cap stamped "KADLECK" for a corner in the west line of Lot 1, Block A, The Parish Episcopal School, an addition to the City of Addison, Dallas County, Texas, according to the plat thereof recorded in Instrument No. 200600450015, of said Official Public Records, at the northeast corner Brookhaven College Replat, an addition to the City of Addison, Dallas County, Texas, according to the plat thereof record in Volume 86105, Page 2676, of the Deed Records of Dallas County, Texas; said point being the southeast corner of said Lot 3, Block A, Vitruvian Park Addition;

THENCE North 89 degrees 50 minutes 23 seconds West, along a common line between said Lot 3, Block A, Vitruvian Park Addition and said Brookhaven College Replat, a distance of 164.00 feet to a set 1/2" iron rod with a yellow plastic cap stamped "WESTWOOD PS" for a corner; said point being South 89 degrees 50 minutes 23 seconds East, a distance of 960.71 feet from a 5/8" iron rod with a yellow plastic cap stamped "WESTWOOD PS" at the southeast corner of Lot 2, Block A, Vitruvian Park Addition, an addition to the City of Addison, Dallas County, Texas, according to the plat thereof recorded in Instrument No. 20090022087, of said Official Public Records and the southwest corner of said Lot 3, Block A, Vitruvian Park Addition;

THENCE departing the said common line between Brookhaven College Replat and Lot 3, Block A, Vitruvian Addition, over and across said Lot 3, Block A, Vitruvian Addition, the following courses and distances:

North 00 degrees 09 minutes 37 seconds East, a distance of 22.50 feet to a set 1/2" iron rod with a yellow plastic cap stamped "WESTWOOD PS" for a corner;

South 89 degrees 50 minutes 23 seconds East, a distance of 60.50 feet to a set 1/2" iron rod with a yellow plastic cap stamped "WESTWOOD PS" at an 'ell' corner;

North 00 degrees 09 minutes 37 seconds East, a distance of 40.50 feet to a set 1/2" iron rod with a yellow plastic cap stamped "WESTWOOD PS" for a corner;

South 89 degrees 50 minutes 23 seconds East, a distance of 30.50 feet to a set 1/2" iron rod with a yellow plastic cap stamped "WESTWOOD PS" at an 'ell' corner;

Page 1 of 3

EXHIBIT A TO PUBLIC STREET RIGHT OF WAY AND GENERAL UTILITY EASEMENT

# EXHIBIT A

North 00 degrees 09 minutes 37 seconds East, a distance of 709.79 feet to a found 5/8" iron rod with a yellow plastic cap stamped "KADLECK" for a southwest corner of the south terminus of Bella Lane, a variable width right-of-way, as dedicated in Vitruvian Park Addition and Bella Lane Right Of Way Dedication, an addition to the City of Addison, Dallas County, Texas, according to the plat thereof recorded in Instrument No. 201100123703, of said Official Public Records; said point being a northerly 'ell' corner of said Lot 3, Block A, Vitruvian Park Addition;

THENCE South 89 degrees 50 minutes 23 seconds East, along the said south terminus of Bella Lane and a north line of said Lot 3, Block A, Vitruvian Park Addition, a distance of 69.18 feet to a found 5/8" iron rod with a yellow plastic cap stamped "KADLECK" for corner in the said west line of Lot 1, Block A, The Parish Episcopal School; said point being at the southeast corner of the said south terminus of Bella Lane and the most easterly northeast corner of said Lot 3, Block A, Vitruvian Park Addition;

THENCE South 00 degrees 07 minutes 24 seconds East, departing the said south terminus of Bella Lane and the said north line of Lot 3, Block A, Vitruvian Park Addition, along the said west line of Lot 1, Block A, The Parish Episcopal School and the east line of said Lot 3, Block A, Vitruvian Park Addition, a distance of 772.80 feet to the POINT-OF-BEGINNING, containing 58,219 square feet or 1.337 acres of land.

The bearing basis for this survey is a bearing of North 89 Degrees 50 Minutes 23 Seconds West, for the south line of Lot 3, Block B of Vitruvian Park Addition, as recorded in Instrument Number 20130219333, Official Public Records of Dallas County, Texas.

An exhibit of even date accompanies this description.
Date: October 11, 2021

L. Lynn Kadleck
Registered Professional Land Surveyor
Texas Registration No. 3952



# EXHIBIT A

**EXHIBIT "B"**
**Survey Plat of Public Street Right-of-Way and General Utility Easement**

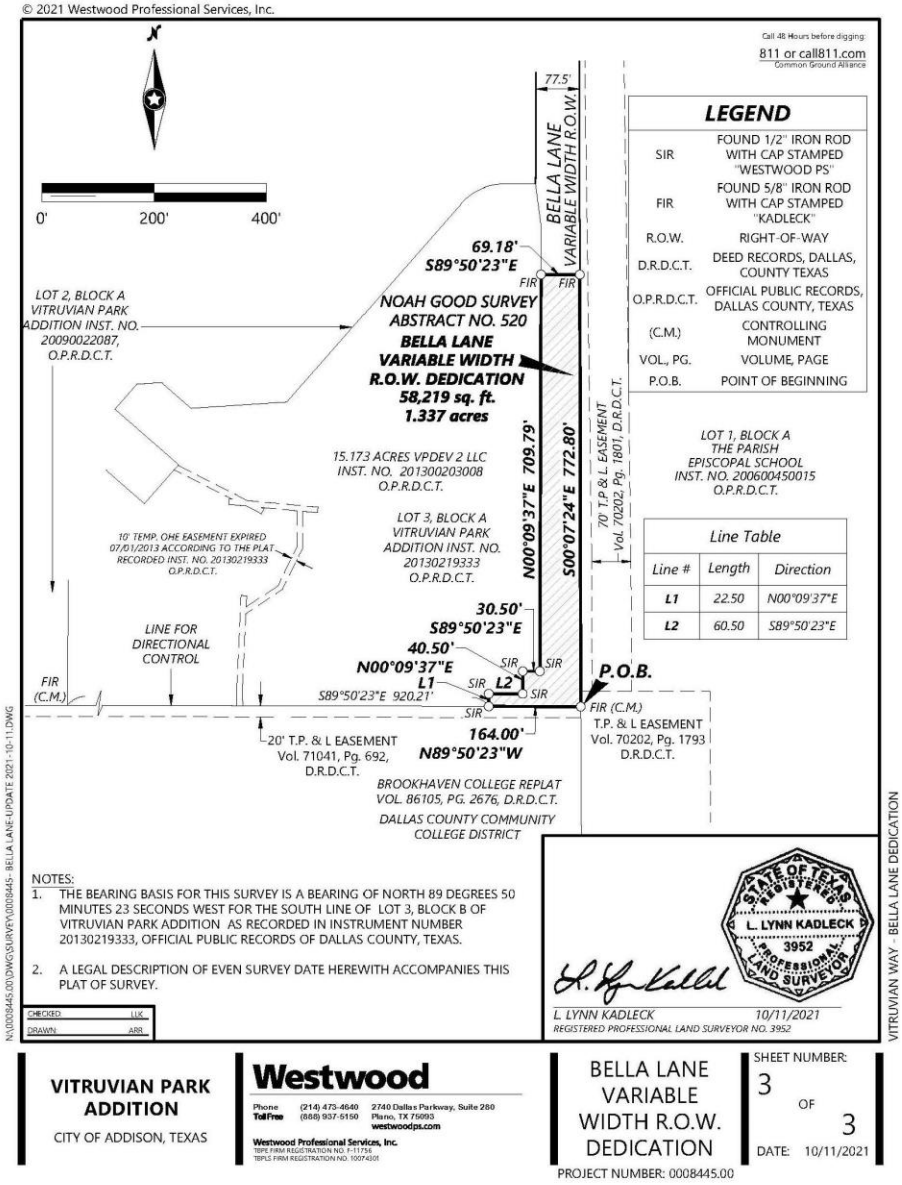


**EXHIBIT B TO PUBLIC STREET RIGHT OF WAY AND GENERAL UTILITY EASEMENT**

# LOCATION MAP

## RIGHT-OF-WAY DEDICATION FOR THE EXTENSION OF BELLA LANE

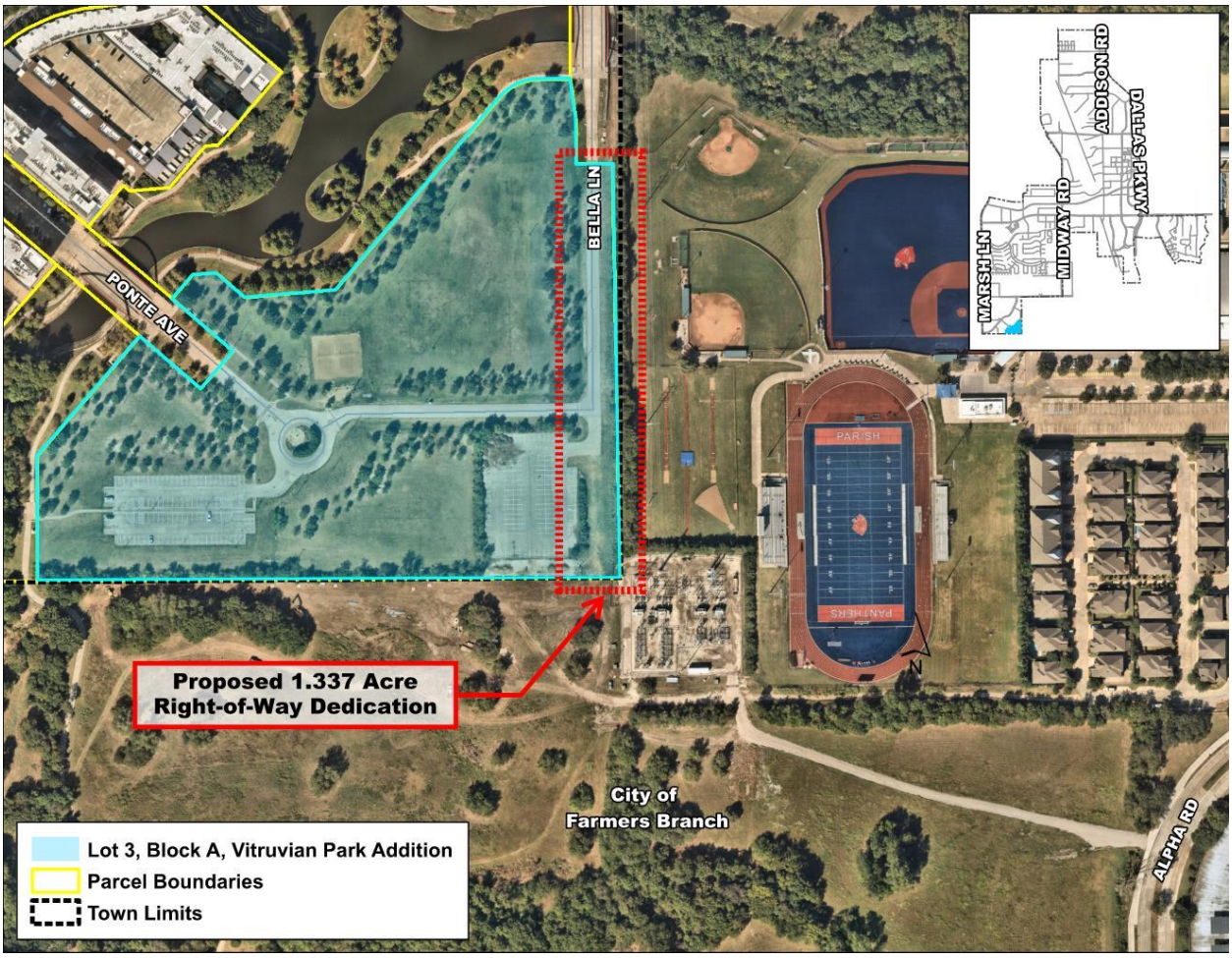

**Council Meeting** **4.**

**Meeting Date:** 01/11/2022

**Department:** Police

**Pillars:** Gold Standard in Public Safety

**Milestones:** Define and promote Addison Identity

---

**AGENDA CAPTION:**

Consider Action on an **Ordinance Revising Sec. 78-175 Overnight Parking of Certain Vehicles Within Residential Areas Prohibited and Sec. 78-286 Storage to Clarify Language for Enforcement of Commercial Vehicle Parking**.

**BACKGROUND:**

At its December 14, 2021 Work Session, the City Council held a discussion and directed that the ordinances regarding residential commercial vehicle parking prohibitions and storage be amended. The proposed changes are:

Sec. 78-175 Overnight Parking of Certain Vehicles within Residential Areas Prohibited.

- Revise the zoning language to include Planned Developments, Urban Centers and Mixed Use Residential districts as areas where the prohibition applies.
- Change the truck capacity to more than 1 ton prohibited.

Sec. 78-236 Storage.

- Revise the language to include Planned Developments, Urban Centers and Mixed Use Residential districts as areas where the prohibition applies.

**RECOMMENDATION:**

Administration recommends approval.

---

**Attachments**

Ordinance Sec 78-175, 286

Ordinance with Redline Markup of Proposed Changes

---

**ORDINANCE NO. _____**

**AN ORDINANCE OF THE TOWN OF ADDISON, TEXAS, AMENDING CHAPTER 78, ARTICLES IV AND VI, BY AMENDING AND RESTATING SECTION 78-175 (OVERNIGHT PARKING OF CERTAIN VEHICLES WITHIN RESIDENTIAL AREAS PROHIBITED) AND SECTION 78-286 (STORAGE); PROVIDING FOR UPDATED REGULATIONS GOVERNING THE OVERNIGHT PARKING AND STORAGE OF CERTAIN VEHICLES WITHIN RESIDENTIAL AREAS; PROVIDING FOR A PENALTY; A SEVERABILITY CLAUSE; A SAVINGS CLAUSE, AND AN EFFECTIVE DATE.**

**WHEREAS**, the City Council has determined it necessary to adopt local regulations governing the parking and storage of vehicles in residential areas to protect the health, safety, and welfare of the City's citizens; and

**WHEREAS**, the City Council finds it necessary to prohibit the overnight parking and storage of certain vehicles in and adjacent to residential areas within the City to safeguard and protect the City's residents and residential communities.

**NOW THEREFORE, BE IT ORDAINED BY THE CITY COUNCIL OF THE TOWN OF ADDISON, TEXAS:**

**SECTION 1.** That the recitals and findings set forth above are hereby found to be true and correct and incorporated as if fully set forth herein.

**SECTION 2.** That Chapter 78, Article IV, Section 78-175 is hereby amended and restated to read as follows:

"…

**Sec. 78-175. - Overnight parking of certain vehicles within residential areas prohibited.**

The city council hereby declares its purpose in enacting this section is to reduce hazardous traffic conditions and protect the health, safety, and welfare of the residents by prohibiting the overnight parking of commercial vehicles in and adjacent to residential areas within the city.

(a) The following definitions shall apply to this section:

*Commercial vehicle* means any vehicle with a manufacturer's rating in excess of one (1) ton that is designed, intended, or used to transport passengers or property, other than a private passenger vehicle. The term shall include, but is not limited to, a truck-tractor, road-tractor, semitrailer, bus, motor home, camper trailer, special mobile equipment, truck, or trailer.

*Private passenger vehicle* means a motor vehicle which is used solely for private transportation and not used for the transportation of persons or property directly or indirectly in connection with a business or for compensation.

(b) It shall be an offense for any person to park or stand a commercial vehicle upon any public or private street, highway, alley, parking lot, driveway, or other property located within, or immediately adjacent to, an area of the city classified by the comprehensive zoning ordinance for residential use, including any residential area located within a planned development, mixed-use, or other special zoning district, at any time from 12:00 a.m. (midnight) until 6:00 a.m.

(c) It shall be a defense to prosecution under subsection (b) of this section if:

(i) the commercial vehicle is parked for the purpose of expeditiously loading or unloading passengers, freight, or merchandise; or

(ii) the commercial vehicle is lawfully parked on private property and enclosed in a building or fully concealed from view by a fence or other lawful erected structure.

…"

**SECTION 3.** That Chapter 78, Article VI, Division 3, Section 78-175 is hereby amended and restated to read as follows:

"…

**Sec. 78-286. – Storage.**

(a) The following definitions shall apply to this section:

*Prohibited vehicle* means a mobile home, recreational vehicle, boat, trailer, camper, or a dismantled or inoperative truck or motor vehicle.

*Front yard* means the portion of a lot or tract which abuts a street and extends across the width of the lot or tract between the street and the main building.

*Side yard* means an open, unoccupied space on the same lot with a building, situated between the building and sideline of the lot and extending through from the front yard to the rear yard.

(b) It shall be an offense for any person to place, store or maintain a prohibited vehicle upon a driveway, side yard, or front yard located within, or immediately adjacent to, an area of the city classified by the comprehensive zoning ordinance for residential use, including any residential area located within a planned development, mixed-use, or other special zoning district, for a continuous period in excess of 24 hours.

(c) It shall be a defense to prosecution under subsection (b) of this section if the prohibited vehicle is enclosed in a building or fully concealed from view by a fence or other lawfully erected structure.

…"

**SECTION 4.** Any person, firm, or corporation violating any of the provisions or terms of this ordinance shall be subject to penalty as provided for in the Code of Ordinances, as heretofore

amended, and upon conviction shall be punished by a fine set in accordance with Chapter 1, Section 1-7 of the Code of Ordinances for the Town of Addison.

**SECTION 5.** The provisions of this Ordinance are severable, and should any section, subsection, paragraph, sentence, phrase or word of this Ordinance, or application thereof to any person, firm, corporation or other business entity or any circumstance, be adjudged or held to be unconstitutional, illegal or invalid, the same shall not affect the validity of the remaining or other parts or portions of this Ordinance, and the City Council hereby declares that it would have passed such remaining parts or portions of this Ordinance despite such unconstitutionality, illegality, or invalidity, which remaining portions shall remain in full force and effect.

**SECTION 6.** All ordinances of the City in conflict with the provisions of this ordinance be, and the same are hereby repealed and all other ordinances of the City not in conflict with the provisions of this ordinance shall remain in full force and effect.

**SECTION 7**. This Ordinance shall become effective from and after its passage and approval and after publication as may be required by law or by the City Charter or ordinance.

**PASSED AND APPROVED** by the City Council of the Town of Addison, Texas, on this the ***11TH*** day of ***JANUARY 2022*****.**

**TOWN OF ADDISON, TEXAS**

_____
Joe Chow, Mayor

**ATTEST:**

_____
Irma Parker, City Secretary

**APPROVED AS TO FORM:**

_____
Whitt Wyatt, City Attorney

**UPDATE TO CHAPTER 78 OVERNIGHT PARKING REGULATIONS**

**Section 78-175 – CURRENT LANGUAGE:**

**Sec. 78-175. - Overnight parking of trucks and buses with more than three-quarter ton rated capacity within certain zones prohibited.**

(a) It shall be unlawful and an offense for any person to park overnight, or between the hours of midnight and 6:00 a.m., any truck-tractor, road-tractor, semitrailer, bus, truck or trailer, when such truck or trailer has a manufacturer's rated capacity in excess of three-fourths ton, upon property within any area zoned as either single-family, duplex or multiple-family district zoning under the zoning ordinance of the town.

(b) This section shall not prevent the parking or standing of the vehicles described in subsection (a) of this section in such zoned areas for the purpose of expeditiously loading and unloading passenger, freight or merchandise.

**NEW LANGUAGE:**
New language is underlined in red
Deleted language is in ~~blue strikethrough~~

**Sec. 78-175. - Overnight parking of ~~trucks and buses with more than three-quarter ton rated capacity within certain zones prohibited~~ certain vehicles within residential areas prohibited.**

The city council hereby declares its purpose in enacting this section is to reduce hazardous traffic conditions and protect the health, safety, and welfare of the residents by prohibiting the overnight parking of commercial vehicles in and adjacent to residential areas within the city.

(a) The following definitions shall apply to this section:

*Commercial vehicle* means any vehicle with a manufacturer's rating in excess of ~~three-fourths~~ one (1) ton that is designed, intended, or used to transport passengers or property, other than a private passenger vehicle. The term shall include, but is not limited to, a truck-tractor, road-tractor, semitrailer, bus, motor home, camper trailer, special mobile equipment, truck, or trailer.

*Private passenger vehicle* means a motor vehicle which is used solely for private transportation and not used for the transportation of persons or property directly or indirectly in connection with a business or for compensation.

(b) It shall be ~~unlawful and~~ an offense for any person to park or stand a commercial vehicle upon any public or private street, highway, alley, parking lot, driveway, or other property located within, or immediately adjacent to, an area of the city classified by the comprehensive zoning ordinance for residential use, including any residential area located within a planned development, mixed-use, or other special zoning district, at any time ~~between~~ from 12:00 a.m. (midnight) ~~and~~ until 6:00 a.m.

(c) It shall be a defense to prosecution under subsection (b) of this section if:

(i) the commercial vehicle is parked for the purpose of expeditiously loading or unloading passengers, freight, or merchandise; or

(ii) the commercial vehicle is lawfully parked on private property and enclosed in a building or fully concealed from view by a fence or other lawful erected structure.

**Section 78-286 – CURRENT LANGUAGE:**

**Sec. 78-286. - Storage.**

(a) A person in a residentially zoned area shall not place, store or maintain on his driveway, side yard or front yard, for a continuous period in excess of 24 hours, a mobile home, recreational vehicle, boat, trailer, camper, dismantled or inoperative truck or motor vehicle. For the purpose of this subsection, "side yard" means an open, unoccupied space on the same lot with a building, situated between the building and side line of the lot and extending through from the front yard to the rear yard. For the purpose of this subsection, "front yard" means the portion of a lot or tract which abuts a street and extends across the width of the lot or tract between the street and the main building.

(b) It shall be a defense to prosecution under subsection (a) of this section if the prohibited item is enclosed in a building or structure, or concealed from view by a fence, shrubs or other landscaping.

**NEW LANGUAGE:**
New language is underlined in red
Deleted language is in ~~blue strikethrough~~

**Sec. 78-286. – Storage.**

(a) The following definitions shall apply to this section:

*Prohibited vehicle means* a mobile home, recreational vehicle, boat, trailer, camper, or a dismantled or inoperative truck or motor vehicle.

*Front yard* means the portion of a lot or tract which abuts a street and extends across the width of the lot or tract between the street and the main building.

*Side yard* means an open, unoccupied space on the same lot with a building, situated between the building and side line of the lot and extending through from the front yard to the rear yard.

(b) ~~A person in a residentially zoned area shall not~~ It shall be an offense for any person to place, store or maintain a prohibited vehicle upon a driveway, side yard, or front yard located within, or immediately adjacent to, an area of the city classified by the comprehensive zoning ordinance for residential use, including any residential area located within a planned development, mixed-use, or other special zoning district, for a continuous period in excess of 24 hours.

(c) It shall be a defense to prosecution under subsection (b) of this section if the prohibited ~~item~~ vehicle is enclosed in a building or fully concealed from view by a fence or other lawfully erected structure.

**Council Meeting** **5.**

**Meeting Date:** 01/11/2022

**Department:** City Manager

---

**AGENDA CAPTION:**

Consider Action on a **Resolution Approving a Reimbursement Grant Funding Agreement Between the Town of Addison and Metrocrest Services for Metrocrest Services' Building Our Future Capital Campaign and Authorizing the City Manager to Execute the Agreement** in an Amount Not to Exceed $120,000.

**BACKGROUND:**

For over 50 years, Metrocrest Services (Metrocrest) has provided a variety of programs for Addison residents such as a food pantry, job skills training, senior programs, and rent assistance.

In a letter dated July 15, 2021, Metrocrest Services made a request of the Town to support their *Building Our Future* capital campaign (Campaign) in the amount of $120,000. The Campaign seeks funding for the construction of Metrocrest's new Community Support Facility ($15.8M project) which is slated to open in the spring of 2023. The letter was discussed by Council during the August 24, 2021 and December 14, 2021 Council meetings.

At Council's direction, staff drafted a Reimbursement Grant Funding Agreement between the Town and Metrocrest. Key provisions of the agreement are:

- The Town will provide a Community Facility Support Grant subject to the continued satisfaction of all the terms and conditions of the agreement by Metrocrest.
- The Community Facility Support Grant is to be paid in two (2) installments.
  - The first installment of the Grant ($60,000) shall be paid by the Town to Metrocrest within thirty days after receipt of a Payment Request following the Commencement of Construction.
  - The second installment of the Grant ($60,000) shall be paid by the Town to Metrocrest within thirty days after receipt of a Payment Request that includes certification by Metrocrest that construction of the Community Support Facility is fifty percent complete.
- Failure to submit the Payment Request for the second installment by the Expiration Date shall operate as a forfeiture of the payment of the second installment under this Agreement.
- Metrocrest agrees that the Community Support Facility will be designed, developed, and constructed for the purpose of providing the Town’s

residents enhanced access to local social services including, but not limited to:

- Expanded case management services, space, and staff;
- Center for employment and continued education;
- Expanded food pantry and warehouse;
- Mobile pantry truck program capabilities;
- Volunteer center with training kitchen;
- Teaching garden with nutritional program; and
- Shared space to offer complementary services.

The agreement is attached to this agenda item for Council consideration.

**RECOMMENDATION:**

Administration recommends approval.

---

**Attachments**

Resolution - Grant Funding Agreement Building Our Future Capital Campaign

---

**RESOLUTION NO. _____**

**A RESOLUTION OF THE CITY COUNCIL OF THE TOWN OF ADDISON, TEXAS APPROVING A REIMBURSEMENT GRANT FUNDING AGREEMENT BETWEEN THE TOWN OF ADDISON AND METROCREST SERVICES IN AN AMOUNT NOT TO EXCEED $120,000 FOR THE METROCREST SERVICES BUILDING OUR FUTURE CAMPAIGN; AUTHORIZING THE CITY MANAGER TO EXECUTE THE AGREEMENT; AND PROVIDING FOR AN EFFECTIVE DATE.**

**WHEREAS**, the City Council of the Town of Addison, Texas ("City") has determined that it is in the best interest of the City to provide a grant of public funds to qualifying organizations provide for the public health and welfare of the local community and the City's residents; and

**WHEREAS**, Metrocrest Services ("Metrocrest") has served the local community for over 50 years, providing a comprehensive range of social services, including access to food, job skills training, senior assistance programs, rent assistance, and other critical services for the City's residents; and

**WHEREAS**, approximately seventy-six percent (76%) of Metrocrest's client households report that Metrocrest is the only nonprofit serving their family, and Metrocrest's local community facilities are an essential resource for City residents in need of assistance; and

**WHEREAS**, the economic impacts of the COVID-19 pandemic have created an increase in demand for social services which Metrocrest is endeavoring to provide for the City's residents; and

**WHEREAS**, Metrocrest has undertaken the 'Building Our Future Campaign' to raise funding for the design, development, and construction of a new community support facility for the purpose of improving the accessibility, capacity, and ability of Metrocrest to serve the City's residents; and

**WHEREAS**, the City is authorized by Chapter 380 of the Texas Local Government Code to provide financial incentives and grants to promote local economic development and provide for the public health and welfare of the local community and the City's residents; and

**WHEREAS**, the City has determined that entering into a reimbursement grant agreement with Metrocrest in support of its Building Our Future Campaign in conformance with Chapter 380 of the Texas Local Government Code (the "Agreement") will promote local economic development and provide for the public health and welfare of the City's residents.

**NOW, THEREFORE, BE IT RESOLVED BY THE CITY COUNCIL OF THE TOWN OF ADDISON, TEXAS:**

**SECTION 1**. The recitals set forth above are true and correct and are incorporated as if fully set forth herein.

**SECTION 2**. The City Council hereby approves the Grant Funding Agreement between the Town of Addison and Metrocrest Services providing a reimbursement grant for Metrocrest's Building Our Future Campaign in an amount not-to-exceed of $120,000, a copy of which is attached hereto as **Exhibit A**. The City Manager is hereby authorized to execute the agreement.

**SECTION 3**. This Resolution shall take effect from and after its date of adoption.

**DULY RESOLVED AND ADOPTED** by the City Council of the Town of Addison, Texas, on this the ***11th*** day of ***JANUARY 2022***.

**TOWN OF ADDISON, TEXAS**

Joe Chow, Mayor

**ATTEST:**

Irma Parker, City Secretary

**GRANT FUNDING AGREEMENT**
Metrocrest "Building Our Future" Campaign Grant

This Grant Funding Agreement ("Agreement") is made by and between the Town of Addison, Texas ("City") and Metrocrest Services ("Metrocrest") (each a "party" and collectively the "parties"), acting by and through their respective authorized officers.

**RECITALS:**

**WHEREAS**, Metrocrest has served the local community for over 50 years, providing a comprehensive range of social services, including access to food, job skills training, senior assistance programs, rent assistance, and other critical services for the City's residents; and

**WHEREAS**, approximately seventy-six percent (76%) of Metrocrest's client households report that Metrocrest is the only nonprofit serving their family, and Metrocrest's local community facilities are an essential resource for City residents in need of assistance; and

**WHEREAS**, the economic impacts of the COVID-19 pandemic have created an increase in demand for social services which has impacted the ability of Metrocrest to provide the necessary social services for the City's residents; and

**WHEREAS**, Metrocrest has undertaken the 'Building Our Future Campaign' (the "Campaign") to design, develop, and build the Community Support Facility for the purpose of improving the accessibility, capacity, and ability of Metrocrest to serve the City's residents; and

**WHEREAS,** Metrocrest has requested that the City support the Campaign by providing a reimbursement grant in conformance with this Agreement; and

**WHEREAS,** the City is authorized by Chapter 380 of the Texas Local Government Code to provide financial incentives and grants to promote local economic development and to stimulate business and commercial activity in the City; and

**WHEREAS**, the City has determined that making providing the Community Facility Support Grant to Metrocrest in accordance with this Agreement will promote local economic development, stimulate business and commercial activity, and promote the public health and welfare of the City's residents.

**NOW THEREFORE**, in consideration of the foregoing, and other consideration the receipt and sufficiency of which are hereby acknowledged, the parties agree as follows.

**Article I**
**Definitions**

Wherever used in this Agreement, the following terms shall have the meanings ascribed to them:

"Bankruptcy or Insolvency" shall mean the dissolution or termination of Metrocrest's existence, insolvency, employment of receiver for any part of Metrocrest's property and such appointment is not terminated within ninety (90) days after such appointment is initially made, any general assignment for the benefit of creditors or the commencement of any proceedings under any bankruptcy or insolvency laws by or against Metrocrest and such proceedings are not dismissed within ninety (90) days after the filing thereof.

"City" shall mean the Town of Addison, Texas.

"Commencement of Construction" shall mean that: (i) the building designs and plans have been prepared and all approvals thereof required by applicable governmental authorities have been obtained for construction of the Community Support Facility; (ii) all necessary permits for the construction of the Community Support Facility pursuant to the respective plans therefore have been issued by all the applicable governmental authorities; and (iii) construction of the Community Support Facility has commenced.

"Community Support Facility" shall mean construction of an approximately forty-eight thousand (48,000) square foot facility within the City of Carrollton, Texas in accordance with this Agreement.

"Community Support Facility Grant" or "Grant" shall mean a reimbursement grant in the total amount of One Hundred and Twenty Thousand and 00/100 Dollars ($120,000.00), to be paid by the City to Metrocrest in two (2) installments as set forth in this Agreement.

"Effective Date" shall mean the last date of execution hereof.

"Expiration Date" shall mean December 31, 2024.

"Impositions" shall mean all taxes, assessments, use and occupancy taxes, charges, excises, license and permit fees, and other charges by public or governmental authority, general and special, ordinary and extraordinary, foreseen and unforeseen, which are or may be assessed, charged, levied, or imposed by any public or governmental authority on Metrocrest with respect to the Community Support Facility or any property or any business owned by Metrocrest within the City.

"Metrocrest" shall mean Metrocrest Services, a Texas nonprofit corporation operating under 501(c)(3) of the Internal Revenue Code.

"Payment Request" shall mean a written request from Metrocrest to the City for payment of any portion of the Grant. The Payment Request shall be accompanied by copies of such invoices, bills, receipts, permits, and other information, as may reasonably be requested by the City to substantiate Metrocrest's eligibility to receive payment, including evidence of the actual costs incurred and paid by Metrocrest in connection with the design or construction of the Community Support Facility as of the date of the applicable Payment Request.

"Related Agreement" shall mean any agreement by and between the City and Metrocrest, or any of its affiliated or related entities.

**Article II**
**Term**

The term of this Agreement shall begin on the Effective Date and continue until the Expiration Date, unless sooner terminated as provided herein.

**Article III**
**The Community Facility Support Grant**

3.1 Community Facility Support Grant. Subject to the continued satisfaction of all the terms and conditions of this Agreement by Metrocrest, and the obligation of Metrocrest to repay the Grant funds pursuant to this Agreement, City agrees to provide Metrocrest with the Community Facility Support Grant to be paid in two (2) installments as follows:

(a) *First Installment*. The first installment of the Grant in the amount of Sixty Thousand and 00/100 Dollars ($60,000.00) shall be paid by the City to Metrocrest within thirty (30) days after receipt of a Payment Request following the Commencement of Construction.

(b) *Second Installment*. The second installment of the Grant in the amount of Sixty Thousand and 00/100 Dollars ($60,000.00) shall be paid by the City to Metrocrest within thirty (30) days after receipt of a Payment Request that includes certification by Metrocrest that construction of the Community Support Facility is fifty percent (50%) complete. Failure to submit the Payment Request for the second installment by the Expiration Date shall operate as a forfeiture of the payment of the second installment under this Agreement.

3.3 Current Revenue. The Grant made hereunder shall be paid solely from lawfully available funds. Under no circumstances shall the obligations of the City hereunder be deemed to create any debt within the meaning of any constitutional or statutory provision. The Grant shall be paid from funds of the City consistent with Article III, Section 52(a) of the Texas Constitution. Further, the City shall not be obligated to pay any commercial bank, lender or similar institution for any loan or credit specified herein, with any statute, rule, regulation, grant, contract provision, subsequent federal guidance or other state or federal law, rule, regulation, or other similar restriction that imposes additional or greater requirements than stated herein and that is directly applicable to the services rendered or funds provided under the terms of this Agreement.

**Article IV**
**Grant Conditions**

The obligation of the City to pay the Grant shall be conditioned upon the compliance and satisfaction by Metrocrest of the terms and conditions of this Agreement, including each of the

conditions contained in this Article IV, which shall remain in effect throughout the entire term of this Agreement.

4.1 Payment Request. Metrocrest's submission of a completed Payment Request to the City shall be a condition precedent to City's payment of any portion of the Grant under this Agreement.

4.2 Community Support Facility Purpose; Available Services. Metrocrest agrees that the Community Support Facility will be designed, developed, and constructed for the purpose of providing the City's residents enhanced access to local social services including, but not limited to:

(a) Expanded case management services, space, and staff;
(b) Center for employment and continued education;
(c) Expanded food pantry and warehouse;
(d) Mobile pantry truck program capabilities;
(e) Volunteer center with training kitchen;
(f) Teaching garden with nutritional program; and
(g) Shared space to offer complementary services.

4.3 Laws, Rules, and Regulations. Metrocrest shall ensure the Grant funds are expended in compliance with this Agreement together with all applicable federal, state, and local laws, rules, regulations, and policies (including, without limitation, the Charter and Ordinances of the City), as the same currently exist or as they may be hereafter amended.

4.4 Repayment of Unused Funds. If any Grant funds are not incurred during the term of this Agreement, they shall be returned by Metrocrest to the City within ten (10) business days following the Expiration Date.

4.4 Reporting; Records; Audit.

(a) *Reports*. The Metrocrest shall keep the City informed of all expenditures made under this Agreement during the term of this Agreement in any frequency or format of report or reporting as determined in the City's sole discretion including, but not limited to, annual reports, quarterly reports, and an annual update to the City Council in writing and a presentation to the City Council of the Town of Addison at a meeting of the City Council when requested by the City.

(b) *Access to Records*. Metrocrest agrees that City, or any of its duly authorized representatives, the state, or the federal government has the right of timely and unrestricted access to any books, documents, papers, reports or other records of Metrocrest that are pertinent to this Agreement, or order to make audit, examinations, excerpts, transcripts, and copies of such records. This right also includes timely and reasonable access to Metrocrest personnel for the for the purpose of reviewing, interviewing, evaluating, and monitoring related to such documents.

(c) *Maintenance of Records*. Metrocrest shall track and document all use and expenditures of the Grant. Metrocrest's records, books, and other documents reasonably related to this Agreement shall be kept and maintained in standard accounting form. Such records, books, and documents shall be made available for inspection by City, or any of its duly authorized representatives, upon request.

(e) *Records Retention*. All records, books, and documents reasonably related to this Agreement shall be maintained and kept by Metrocrest for a minimum of four (4) years after the termination or expiration of this Agreement. If any litigation, claim, or audit involving these documents or records begins before the specified period expires, Metrocrest must keep the records and documents for not less than four (4) years and until all litigation, claims, or audit findings are resolved, whichever is later.

(f) *Audit*. Should the City determine it reasonably necessary, Metrocrest shall make all of its records, books, and documents reasonably related to this Agreement available to City, including its personnel and authorized representatives, at reasonable times and within reasonable periods, for inspection or auditing purposes or to substantiate that the use of the Grant funds is in the compliance with this Agreement.

**Article V**
**Termination; Repayment**

5.1 Termination. This Agreement shall terminate upon any one of the following:

(a) upon the Expiration Date;
(b) by written agreement of the parties;
(c) upon written notice by either party in the event the other party breaches any of the terms or conditions of this Agreement or a Related Agreement and such breach is not cured within thirty (30) days after written notice thereof in accordance with this Agreement;
(d) upon written notice by the City, if Metrocrest suffers an event of Bankruptcy or Insolvency;
(e) upon written notice by the City, if any Impositions owed by Metrocrest shall become delinquent (provided, however, Metrocrest retains the right to timely and properly protest and contest any such Impositions); and
(f) upon written notice by either party, if any subsequent federal or state legislation or any decision of a court of competent jurisdiction declares or renders this Agreement invalid, illegal or unenforceable.

5.2 Repayment. In the event the Agreement is terminated by the City pursuant to Section 5.1(c), (d), (e), or (f) Metrocrest shall immediately repay to the City an amount equal to the total Grant previously paid by the City to Metrocrest, plus interest at the rate periodically announced by the Wall Street Journal as the prime or base commercial lending rate, or if the Wall Street Journal shall ever cease to exist or cease to announce a prime or base lending rate, then at

the annual rate of interest from time to time announced by Citibank, N.A. (or by any other New York money center bank reasonably selected by the City) as its prime or base commercial lending rate, which shall accrue from the date the Grant was initially paid to Metrocrest.

5.3 Right of Offset. The City may, at its sole option, offset any amounts due and payable under this Agreement against any debt (including taxes) lawfully due to the City from Metrocrest, regardless of whether the amount due arises pursuant to the terms of this Agreement, a Related Agreement or otherwise and regardless of whether or not the debt due the City has been reduced to judgment by a court.

**Article VI**
**Miscellaneous**

6.1 Binding Agreement; Assignment. This Agreement shall be binding upon and inure to the benefit of the heirs, successors, affiliates, administrators, executors, and permitted assigns of the respective parties. This Agreement may not be assigned by Metrocrest without the prior written consent of the City.

6.2 Independent Contractor. It is acknowledged and agreed by the parties that the terms hereof are not intended to and shall not be deemed to create a partnership or joint venture among the parties. It is understood and agreed between the parties that Metrocrest, in satisfying the conditions of this Agreement, has acted independently and the City assumes no responsibilities or liabilities to third parties in connection with these actions.

6.3 Authorization. Each party represents that it has full capacity and authority to grant all rights and assume all obligations that are granted and assumed under this Agreement. Metrocrest represents and warrants to the City that Metrocrest is a duly formed, validly existing legal entity in good standing under the laws of the state of Texas and is authorized to transact business in the state of Texas.

6.4 Entire Agreement. This Agreement is the entire Agreement between the parties with respect to the subject matter covered in this Agreement. There is no other collateral oral or written Agreement between the parties that in any manner relates to the subject matter of this Agreement.

6.5 Entire Agreement. This Agreement is the entire Agreement between the parties with respect to the subject matter covered in this Agreement. There is no other collateral oral or written Agreement between the parties that in any manner relates to the subject matter of this Agreement, except as provided in any exhibits attached hereto.

6.6 Notice. Any notice required or permitted to be delivered hereunder shall be deemed received three (3) days thereafter sent by United States Mail, postage prepaid, certified mail, return receipt requested, addressed to the party at the address set forth below or on the day actually received as sent by courier or otherwise hand delivered.

If intended for City, to:

Attn: Wesley S. Pierson, City Manager
Town of Addison
5300 Belt Line Rd.
Addison, Texas 75254

With a copy to:

Attn: Whitt L. Wyatt, City Attorney
Wood Banowsky, PLLC
3710 Rawlins St., Suite 1000
Dallas, Texas 75219

If intended for Metrocrest, to:

Attn: Tracy Eubanks, CEO
Metrocrest Services
13801 Hutton Drive, Suite 150
Farmers Branch, Texas 75234

6.7 Governing Law. This Agreement shall be governed by the laws of the state of Texas; and venue for any action concerning this Agreement shall be in the state district court of Dallas County, Texas. The parties agree to submit to the personal and subject matter jurisdiction of said court.

6.8 Amendment. This Agreement may be amended solely by mutual written agreement of the parties.

6.9 Legal Construction. In the event any one or more of the provisions contained in this Agreement shall for any reason be held to be invalid, illegal, or unenforceable in any respect, such invalidity, illegality, or unenforceability shall not affect other provisions, and it is the intention of the parties to this Agreement that in lieu of each provision that is found to be illegal, invalid, or unenforceable, a provision be added to this Agreement which is legal, valid and enforceable and is as similar in terms as possible to the provision found to be illegal, invalid or unenforceable.

6.10 Recitals. The recitals to this Agreement are incorporated herein.

6.11 Counterparts. This Agreement may be executed in counterparts. Each of the counterparts shall be deemed an original instrument, but all of the counterparts shall constitute one and the same instrument.

6.12 Survival of Covenants. Any of the representations, warranties, covenants, and obligations of the parties, as well as any rights and benefits of the parties, pertaining to a period of time following the termination of this Agreement shall survive termination.

6.13 Employment of Undocumented Workers. During the term of this Agreement Metrocrest agrees not to knowingly employ any undocumented workers and if convicted of a violation under 8 U.S.C. Section 1324a (f), Metrocrest shall repay the amount of the Grant and any other funds received by Metrocrest from the City as of the date of such violation within one hundred twenty (120) days after the date Metrocrest is notified by the City of such violation, plus interest at the rate of four

(4%) compounded annually from the date of violation until paid. Metrocrest is not liable for a violation of this section by a subsidiary, affiliate, or franchisee of Metrocrest or by a person with whom Metrocrest contracts.

6.14 Statutory Verifications. Metrocrest's execution of this Agreement shall serve as its verification that:

(a) Metrocrest (i) does not Boycott Israel and agrees that during the term of the Agreement will not Boycott Israel as that term is defined in Texas Government Code Section 808.001, as amended; (ii) does not Boycott Energy Companies and agrees that during the term of this Agreement will not Boycott Energy Companies as that term is defined in Texas Government Code Section 809.001, as amended; and (iii) does not have a practice, policy, guidance, or directive that discriminates against a firearm entity or firearm trade association as those terms are defined in Texas Government Code Section 2274.001, as amended, and will not discriminate during the term of this Agreement against a firearm entity or firearm trade association; or

(b) Metrocrest is exempt from the forgoing verification because it (i) is a sole proprietor, (ii) a nonprofit entity, (iii) a governmental entity, or (iv) has fewer than ten (10) fulltime employees.

6.14 Public Information Act Requirements. Metrocrest acknowledges that any and all records of Metrocrest, including but not limited to documents which describe, relate to, convey and/or illustrate the obligations, terms and conditions set forth in this Agreement may be subject to the Texas Public Information Act (the "Act"), Texas Government Code Chapter 552, as amended. Metrocrest agrees to fully and promptly cooperate with the City in responding to requests for information received by the City for the foregoing information pursuant to the Act. In the event Metrocrest determines that any of its information responsive to a request under the Act is confidential and/or exempt from disclosure to the public under the provisions of the Act, Metrocrest shall, at its cost, be solely responsible for asserting arguments to the Office of the Attorney General pursuant to §552.305(b) of the Act, and for filing any and all subsequent appeals relating to an opinion of the Texas Attorney General that requires disclosure of Metrocrest's confidential information. Notwithstanding the foregoing, Metrocrest agrees that the City may, but shall be under no obligation to, submit arguments to the Attorney General relating to reasons Metrocrest's confidential information is exempt from disclosure to the public under the Act, regardless of whether Metrocrest has asserted its own arguments to the Attorney General.

[REMAINDER OF PAGE INTENTIONALLY LEFT BLANK -
SIGNATURE PAGE FOLLOWS]

IN WITNESS WHEREOF, the parties have executed and delivered this Agreement as of the date of last execution hereof.

| **TOWN OF ADDISON, TEXAS** | **METROCREST SERVICES** |
|---|---|
| By:_____<br>Wesley S. Pierson, City Manager | By:_____<br>Tracy Eubanks, CEO |
| Date: _____ | Date: 12/21/21 |

ATTEST:

By:_____
Irma Parker, City Secretary

**Council Meeting** **6.**

**Meeting Date:** 01/11/2022

**Department:** Infrastructure- Development Services

**Pillars:** Excellence in Asset Management

**Milestones:** Implement the Asset Management Plan in accordance with the Asset Management Policy, utilizing information systems

---

**AGENDA CAPTION:**

Consider Action on a **Resolution Approving an Agreement Between the Town of Addison and Fuquay, Inc. for Manhole Rehabilitation Services for Fiscal Year 2021-2022 and Authorizing the City Manager to Execute the Agreement** in an Amount Not to Exceed $59,467.

**BACKGROUND:**

As part of the Wastewater System Maintenance Program, the Utilities Division of the Public Works and Engineering Services Department contracts out manhole lining repairs.

These repair services are purchased through BuyBoard. This state-wide cooperative purchasing agency bids out services and products for its members to provide the leverage needed to achieve better pricing on products, equipment, and services.

The attached price quote reflects the cost of planned repair services plus $20,000 for unforeseen repairs that may be needed at the Town's discretion. This is included for the sake of efficiency in purchasing. This purchase is budgeted in the Fiscal Year 2021-2022 Utility Operations and Maintenance budget. It is within budget.

**RECOMMENDATION:**

Administration recommends approval.

---

**Attachments**

Resolution - Fuquay Agreement for Annual Utility Manhole and Line Maintenance Rehabilitation

---

**RESOLUTION NO. _____**

**A RESOLUTION OF THE CITY COUNCIL OF THE TOWN OF ADDISON, APPROVING AN AGREEMENT WITH FUQUAY, INC. FOR MANHOLE REHABILITATION SERVICES FOR FISCAL YEAR 2021-2022 IN CONFORMANCE WITH PROPOSAL NO. 635-21; AUTHORIZING THE CITY MANAGER TO EXECUTE THE AGREEMENT; AND PROVIDING AN EFFECTIVE DATE.**

**WHEREAS,** the City Council desires to authorize an agreement for annual manhole rehabilitation services (FY21-22) in conformance with Proposal No. 635-21 submitted by Fuquay, Inc.

**NOW, THEREFORE, BE IT RESOLVED BY THE CITY COUNCIL OF THE TOWN OF ADDISON, TEXAS:**

**SECTION 1**. The City Council hereby approves the contractor agreement between the Town of Addison and Fuquay, Inc. for annual manhole rehabilitation services (FY21-22) in conformance with Proposal No. 635-21, in an amount not-to-exceed of $59,467, a copy of which is attached to this Resolution as **Exhibit A**. The City Manager is hereby authorized to execute the agreement.

**SECTION 2.** This Resolution shall take effect from and after its date of adoption.

**DULY RESOLVED AND ADOPTED** by the City Council of the Town of Addison, Texas, on this the ***11th*** day of ***January 2022*.**

**TOWN OF ADDISON, TEXAS**

_____
Joe Chow, Mayor

**ATTEST:**

_____
Irma Parker, City Secretary

**CONTRACTOR AGREEMENT**
Annual Manhole Rehabilitation Services FY21-22
Proposal #635-21

This **CONTRACTOR AGREEMENT** ("Agreement") is made as of the Effective Date by and between **Fuquay, Inc.,** hereinafter called "CONTRACTOR", and the **Town of Addison, Texas**, hereinafter called "CITY".

RECITALS

**WHEREAS**, CITY desires CONTRACTOR to perform certain work and services set forth in Section 1 (the "Scope of Services"), and

**WHEREAS**, CONTRACTOR has expressed a willingness to perform said work and services, hereinafter referred to only as "services", specified in the Contract Documents, and enumerated under Section 1, of this Agreement;

**NOW, THEREFORE**, for and in consideration of the covenants and promises made one to the other herein, CITY and CONTRACTOR agree as follows:

**Section 1. Scope of Services**

Upon issuance of one more written notice(s) to proceed by CITY, CONTRACTOR agrees to provide to CITY the necessary services, labor, materials, equipment and supplies related to the annual manhole rehabilitation services project for FY21-22 (the "Project") as set forth in Exhibit "A" (Scope of Services) and as more particularly described in the Contract Documents.

**Section 2. Term of Agreement**

The term of this Agreement shall begin on the last date of execution hereof (the "Effective Date") and shall continue until CONTRACTOR completes the services required herein to the satisfaction of CITY and has been paid in full by City, unless sooner terminated as provided in Section 9, below.

**Section 3. Contract Documents**

A. This Agreement is a part of the Contract Documents, which include:

1) This Agreement, including any exhibits or addenda hereto;
2) CITY'S request for proposals for the Project (the "Bid") together with all applicable performance standards and regulations applicable to the services (including all specifications and warranties applicable to the materials for the Project);
3) CITY'S written notice(s) to proceed to the CONTRACTOR;
4) CONTRACTOR's proposal dated October 28, 2021, attached hereto as "Exhibit A" (the "Proposal" or "Response");
5) Properly authorized change orders; and
6) Any other materials distributed by the CITY that relate to the Project.

In the event there exists a conflict between any term, provision, or interpretation of the Contract Documents, the documents shall take precedent and control in the order listed above in this Section 3. If discrepancies are found that may impact CONTRACTOR's work or services related to the Project, it shall be the CONTRACTOR's obligation to seek clarification as to which requirements or provisions control before undertaking any work on that component of the Project. Should CONTRACTOR fail or refuse to seek a

clarification of such conflicting or inconsistent requirements or provisions prior to any work on that component of the Project, CONTRACTOR shall be solely responsible for the costs and expenses - including additional time - necessary to cure, repair and/or correct that component of the Project.

**Section 4. Contractor Obligations**

A. CONTRACTOR shall devote such time as reasonably necessary for the satisfactory performance of the work under this Agreement. Should CITY require additional services not included under this Agreement, CONTRACTOR shall make reasonable effort to provide such additional services at mutually agreed charges or rates, and within the time schedule prescribed by CITY; and without decreasing the effectiveness of the performance of services required under this Agreement.

B. To the extent reasonably necessary for CONTRACTOR to perform the services under this Agreement, CONTRACTOR shall be authorized to engage the services of any agents, assistants, persons, or corporations that CONTRACTOR may deem proper to aid or assist in the performance of the services under this Agreement with the prior written approval of CITY. The cost of such personnel and assistance shall be a reimbursable expense to CONTRACTOR only if authorized in writing in advance by CITY.

C. Unless otherwise agreed, CONTRACTOR shall provide and pay for all materials, supplies, machinery, equipment, tools, superintendence, labor, insurance, and all water, light, power, fuel, transportation and all other facilities necessary for the execution and completion of the work covered by the Scope of Services. Unless otherwise specified, all materials shall be new and both workmanship and materials shall be of a good quality. CONTRACTOR shall, if required, furnish satisfactory evidence as to the kind and quality of materials. Materials or work described in words that so applied have well known, technical or trade meaning shall be held to refer to such recognized standards.

D. CONTRACTOR shall comply with all laws, ordinances, rules and regulations governing CONTRACTOR's performance of this Agreement.

E. All minor details of the work not specifically mentioned in the Scope of Services but obviously necessary for the proper completion of the work, such as the proper connection of new work to old, shall be considered as incidental to and a part of the work for which the prices are set forth in this Agreement. CONTRACTOR will not be entitled to any additional compensation therefor unless specifically stated otherwise. Otherwise the term "extra work" as used in this Agreement shall be understood to mean and include all work that may be required by CITY to be done by CONTRACTOR to accomplish any alteration or addition to the work in conformance with the Contract Documents. It is agreed that CONTRACTOR shall perform all extra work under the direction of the City's designated representative when presented with a written work order signed by the City's representative, subject, however, to the right of CONTRACTOR to require written confirmation of such extra work order by CITY. Payment for extra work shall be as agreed in the work order.

F. CONTRACTOR agrees to indemnify, defend, and save CITY harmless from all claims growing out of any demands of subcontractors, laborers, workmen, mechanics, materialmen, and suppliers of machinery and parts thereof, equipment, power tools, all supplies incurred in the furtherance of the performance of this Agreement. When CITY requests, CONTRACTOR shall furnish satisfactory evidence that all obligations of the nature hereinabove designated have been paid, discharged or waived.

**Section 5. Payment**

A. CITY agrees to pay CONTRACTOR for all services authorized in writing and properly performed by CONTRACTOR in conformance with the Contract Documents in a total amount not to exceed FIFTY-NINE THOUSAND, FOUR HUNDRED AND SIXTY-SEVEN AND NO/100 DOLLARS ($59,467.00) ("Contract Price"), subject to additions or deletions for changes or extras agreed upon in

writing. Unless otherwise provided herein, payment to CONTRACTOR shall be monthly based on the CONTRACTOR'S monthly progress report and detailed monthly itemized statement for services that shows the names of the CONTRACTOR'S employees, agents, contractors performing the services, the time worked, the actual services performed, and the rates charged for such services, in a form reasonably acceptable to CITY. CITY shall pay such monthly statements within thirty (30) days after receipt and CITY verification of the services.

B. CITY may deduct from any amounts due or to become due to CONTRACTOR any sum or sums owing by CONTRACTOR to CITY. In the event of any breach by CONTRACTOR of any provision or obligation of this Agreement, or in the event of the assertion by other parties of any claim or lien against CITY, or the CITY'S premises, arising out of CONTRACTOR's performance of this Agreement, CITY shall have the right to retain out of any payments due or to become due to CONTRACTOR an amount sufficient to completely protect the CITY from any and all loss, damage or expense therefrom, until the breach, claim or lien has been satisfactorily remedied or adjusted by CONTRACTOR.

C. CITY may, on account of subsequently discovered evidence, withhold the whole or part of any payment to such extent as may be necessary to protect itself from loss on account of:

(1) Defective work not remedied;

(2) Claims filed or reasonable evidence indicating possible filing of claims;

(3) Failure of CONTRACTOR to make payments promptly to subcontractors or for material or labor which CITY may pay as an agent for the CONTRACTOR; or

(4) Damages to another contractor or subcontractor.

When the above grounds are removed, or CONTRACTOR provides a surety bond satisfactory to CITY which will protect CITY in the amount withheld because of said grounds, CITY will release the amounts withheld.

**Section 6. Responsibilities**

A. CONTRACTOR shall be responsible for the professional quality, technical accuracy, and the coordination of all materials (including Tremco Incorporated's specifications for the materials), construction, installation and other services furnished by CONTRACTOR under this Agreement. CONTRACTOR shall, without additional compensation, correct or revise any errors or deficiencies in the installation and construction of the Project components to conform with the Contract Documents.

B. Neither CITY's review, approval or acceptance of, nor payment for any of the services required under this Agreement, shall be construed to operate as a waiver of any rights under this Agreement or of any cause of action arising out of the performance of this Agreement, and CONTRACTOR shall be and remain liable to CITY in accordance with applicable law for all damages to CITY caused by CONTRACTOR's negligent performance of any of the services furnished under this Agreement.

**Section 7. Time for Performance**

A. CONTRACTOR shall perform all services as provided for under this Agreement in a proper, efficient, timely, and professional manner in accordance with CITY's requirements. CONTRACTOR shall have completed the work in conformance with the schedule(s) established by CITY, subject to any extension(s) approved by CITY in conformance with this Section 7.

B. In the event CONTRACTOR's performance of this Agreement is delayed or interfered with by acts of the CITY or others, CONTRACTOR may request an extension of time for the performance of same as hereinafter provided, but shall not be entitled to any increase in fee or price, or to damages or additional compensation as a consequence of such delays.

C. No allowance of any extension of time, for any cause whatever, shall be claimed or made to CONTRACTOR, unless CONTRACTOR shall have made written request upon CITY for such extension within forty-eight (48) hours after the cause for such extension occurred, and unless CITY and CONTRACTOR have agreed in writing upon the allowance of additional time to be made.

D. CONTRACTOR understands and agrees that time is of the essence of this contract, and that for each day of delay beyond the scheduled provided for the completion of any component of the work or services herein specified and contracted for (after due allowance for such extension of time as may otherwise be provided for extension of time herein), CITY may withhold permanently from the Contract Price an amount equal to $250 per day, which the parties mutually agree is the amount reasonably necessary to mitigate the effect upon CITY of CONTRACTOR's delay in performance for this particular Project.

E. In case CONTRACTOR should abandon and fail or refuse to resume work within ten (10) days after written notification from the City, or if CONTRACTOR fails to comply with the orders of the CITY, when such orders are consistent with the Contract Documents, then, and in that case, where performance and payment bonds exist, the Sureties on these bonds may be notified in writing by CITY and directed to complete the work (at CITY'S sole discretion), and a copy of said notice shall be delivered to CONTRACTOR. After receiving said notice of abandonment, CONTRACTOR shall not remove from the work any machinery, equipment, tools, materials or supplies then on the job, but the same, together with any materials and equipment under contract for the work, may be held for use on the work by the CITY or the Surety on the performance bond, or another contractor in completion of the work; and CONTRACTOR shall not receive any rental or credit therefor, it being understood that the use of such equipment and materials will ultimately reduce the cost to complete the work and be reflected in the final settlement. Nothing in this section shall be deemed a waiver of any remedy available to the CITY under this Agreement and the CITY shall retain all remedies upon default provided in Section 14 herein.

(1) In case the Surety should fail to commence compliance with the notice for completion hereinbefore provided for, written ten (10) days after service f such notice, then the CITY may provide for completion of the work in either of the following elective manners:

a. The CITY may employ such force of labor and use such machinery, equipment, tools, materials and supplies as said CITY may deem necessary to complete the work and charge the expense of such labor, machinery, equipment, tools, materials and supplies to said CONTRACTOR, and expense so charged shall be deducted and paid by the CITY out of such moneys as may be due, or that may thereafter at any time become due to the CONTRACTOR under and by virtue of this Agreement. In case such expense is less than the sum which would have been payable under this contract, if the same had been completed by the CONTRACTOR, then said CONTRACTOR shall receive the difference. In case such expense is greater than the sum which would have been payable under this contract, if the same had been completed by said CONTRACTOR, then the CONTRACTOR and/or its Surety shall pay the amount of such excess to the CITY; or

b. The CITY under sealed bids, when and in the manner required by law, may let the contract for the completion of the work under substantially the same terms and conditions which are provided in this Agreement. In the case of any increase in

cost to the CITY under the new contract as compared to what would have been the cost under this Agreement, such increase shall be charged to the CONTRACTOR and the Surety shall be and remain bound therefor. However, should the cost to complete any such new contract prove to be less than what would have been the cost to complete under this Agreement, the CONTRACTOR and/his Surety shall be credited therewith.

**Section 8. Ownership of Project; Bill of Sale**

A. CONTRACTOR warrants that title to all work, including all equipment and materials incorporated into the Project, will pass to CITY no later than the time of final payment. CONTRACTOR further warrants that upon payment by CITY, all work for which payments have been received from CITY shall be free and clear of liens, claims, security interests or other encumbrances in favor of CONTRACTOR or any other person or entity whatsoever.

B. CONTRACTOR agrees to assign to CITY at the time of completion of the Scope of Services all manufacturer's warranties relating to equipment, materials and labor used in the Project and further agrees to perform the Project in such manner to preserve all manufacturer's warranties. If necessary as a matter of law, CONTRACTOR may retain the right to enforce directly any such manufacturers' warranties during the one year period following the date of acceptance of the Project by City.

**Section 9. Termination**

A. CITY may suspend or terminate this Agreement for cause or without cause at any time by giving written notice to CONTRACTOR. In the event suspension or termination is without cause, payment to CONTRACTOR, in accordance with the terms of this Agreement, will be made based on services reasonably determined by CITY to be satisfactorily performed to the date of suspension or termination. Such payment will be due upon delivery of all instruments of service to CITY.

B. If CITY requires a modification of this Agreement with CONTRACTOR, and in the event CITY and CONTRACTOR fail to agree upon a modification to this Agreement, CITY shall have the option of terminating this Agreement and CONTRACTOR's services hereunder at no additional cost other than the payment to CONTRACTOR, in accordance with the terms of this Agreement, for the services reasonably determined by CITY to be properly performed by CONTRACTOR prior to such termination date.

**Section 10. Insurance**

A. CONTRACTOR shall during the term hereof maintain in full force and effect all insurance policies required by the CITY, which shall strictly comply with CITY's adopted insurance requirements for projects of this nature and scope, including, at a minimum: (i) a comprehensive general liability policy of insurance for bodily injury, death and property damage insuring against all claims, demands or actions relating to the CONTRACTOR's performance of services pursuant to this Agreement with a minimum combined single limit of not less than $1,000,000.00 per occurrence ($2,000,00.00 aggregate) for injury to persons (including death), and for property damage; (ii) policy of automobile liability insurance covering any vehicles owned and/or operated by CONTRACTOR, its officers, agents, and employees, and used in the performance of this Agreement with policy limits of not less than $1,000,000.00 combined single limit and aggregate for bodily injury and property damage; (iii) statutory Worker's Compensation Insurance at the statutory limits and Employers Liability covering all of CONTRACTOR's employees involved in the provision of services under this Agreement with policy limit of not less than $1,000,000.00.

B. All insurance and certificate(s) of insurance shall contain the following provisions: (1) name CITY, its officers, and employees as additional insureds as to all applicable coverage with the exception of

Workers Compensation Insurance; (2) provide for at least thirty (30) days prior written notice to CITY for cancellation or non-renewal of the insurance; (3) provide for a waiver of subrogation against CITY for injuries, including death, property damage, or any other loss to the extent the same is covered by the proceeds of insurance. Contractor shall provide written notice to CITY of any material change of or to the insurance required herein.

C. All insurance companies providing the required insurance shall be authorized to transact business in Texas and rated at least "A" by AM Best or other equivalent rating service.

D. A certificate of insurance evidencing the required insurance and all endorsements shall be submitted prior to commencement of services.

**Section 11. Indemnification.**

**CITY SHALL NOT BE LIABLE FOR ANY LOSS, DAMAGE, OR INJURY OF ANY KIND OR CHARACTER TO ANY PERSON OR PROPERTY ARISING FROM THE SERVICES OF CONTRACTOR PURSUANT TO THIS AGREEMENT. CONTRACTOR HEREBY WAIVES ALL CLAIMS AGAINST CITY, ITS OFFICERS, AGENTS AND EMPLOYEES (COLLECTIVELY REFERRED TO IN THIS SECTION AS "CITY") FOR DAMAGE TO ANY PROPERTY OR INJURY TO, OR DEATH OF, ANY PERSON ARISING AT ANY TIME AND FROM ANY CAUSE OTHER THAN THE GROSS NEGLIGENCE OR WILLFUL MISCONDUCT OF CITY OR BREACH OF CITY'S OBLIGATIONS HEREUNDER. CONTRACTOR AGREES TO INDEMNIFY AND SAVE HARMLESS CITY FROM AND AGAINST ANY AND ALL LIABILITIES, DAMAGES, CLAIMS, SUITS, COSTS (INCLUDING COURT COSTS, REASONABLE ATTORNEYS' FEES AND COSTS OF INVESTIGATION) AND ACTIONS OF ANY KIND BY REASON OF INJURY TO OR DEATH OF ANY PERSON OR DAMAGE TO OR LOSS OF PROPERTY TO THE EXTENT CAUSED BY CONTRACTOR'S NEGLIGENT PERFORMANCE OF SERVICES UNDER THIS AGREEMENT OR BY REASON OF ANY NEGLIGENT ACT OR OMISSION ON THE PART OF CONTRACTOR, ITS OFFICERS, DIRECTORS, SERVANTS, EMPLOYEES, REPRESENTATIVES, CONSULTANTS, LICENSEES, SUCCESSORS OR PERMITTED ASSIGNS (EXCEPT WHEN SUCH LIABILITY, CLAIMS, SUITS, COSTS, INJURIES, DEATHS OR DAMAGES ARISE FROM OR ARE ATTRIBUTED TO NEGLIGENCE OF CITY, IN WHOLE OR IN PART, IN WHICH CASE CONTRACTOR SHALL INDEMNIFY CITY ONLY TO THE EXTENT OR PROPORTION OF NEGLIGENCE ATTRIBUTED TO CONTRACTOR AND/OR ITS OFFICERS, DIRECTORS, SERVANTS, EMPLOYEES, REPRESENTATIVES, CONSULTANTS, LICENSEES, SUCCESSORS OR PERMITTED ASSIGNS AS DETERMINED BY A COURT OR OTHER FORUM OF COMPETENT JURISDICTION). CONTRACTOR'S OBLIGATIONS UNDER THIS SECTION SHALL NOT BE LIMITED TO THE LIMITS OF COVERAGE OF INSURANCE MAINTAINED OR REQUIRED TO BE MAINTAINED BY CONTRACTOR UNDER THIS AGREEMENT. THIS PROVISION SHALL SURVIVE THE TERMINATION OF THIS AGREEMENT.**

**Section 12. Assignment**

CONTRACTOR shall not assign or sublet this Agreement, or any part thereof, without the prior written consent of CITY.

**Section 13. Applicable Laws**

CONTRACTOR shall comply with all federal, state, county and municipal laws, ordinances, regulations, safety orders, resolutions and building codes relating or applicable to services to be performed under this Agreement. The laws of the state of Texas shall govern this Agreement; and venue for any action

concerning this Agreement shall be in the State District Court of Dallas County, Texas. The parties agree to submit to the personal and subject matter jurisdiction of said court

**Section 14. Default of CONTRACTOR**

In the event CONTRACTOR fails to comply or becomes disabled and unable to comply with the provisions of this Agreement as to the quality or character of the service or time of performance, and the failure is not corrected within ten (10) days after written notice by CITY to CONTRACTOR, CITY may, at its sole discretion without prejudice to any other right or remedy:

A. Terminate this Agreement and be relieved of the payment of any further consideration to CONTRACTOR except for all work determined by CITY to be satisfactorily completed prior to termination. Payment for work satisfactorily completed shall be for actual costs, including reasonable salaries and travel expenses of CONTRACTOR to and from meetings called by CITY at which CONTRACTOR is required to attend, but shall not include any loss of profit of CONTRACTOR. In the event, of such termination, CITY may proceed to complete the services in any manner deemed proper by CITY, either by the use of its own forces or by subletting the work to another contractor.

B. CITY may, without terminating this Agreement or taking over the services, furnish the necessary materials, equipment, supplies and/or help necessary to remedy the situation, at the expense of CONTRACTOR.

**Section 15. Adjustments in Services**

No claims for extra services, additional services or changes in the services will be made by CONTRACTOR without written consent from CITY prior to the performance of such services.

**Section 16. Execution Becomes Effective**

This Agreement will be effective upon signing of the Agreement by authorized representatives of CONTRACTOR and CITY.

**Section 17. Agreement Amendments**

This Agreement contains the entire understanding of the parties with respect to the subject matter hereof and there are no oral understandings, statements or stipulations bearing upon the meaning or effect of this Agreement which have not been incorporated herein. This Agreement may only be modified, amended, supplemented or waived by a written instrument executed by the parties except as may be otherwise provided therein.

**Section 18. Severability.**

In the event any one or more of the provisions contained in this Agreement shall for any reason be held to be invalid, illegal, or unenforceable in any respect, such invalidity, illegality or unenforceability shall not affect any other provisions, and the Agreement shall be construed as if such invalid, illegal, or unenforceable provision had never been contained in it.

**Section 19. Independent Contractor.**

In satisfying the conditions of and providing the services under this Agreement, CONTRACTOR is acting independently, and CITY assumes no responsibility or liabilities to any third party in connection with

CONTRACTOR's actions. All services to be performed by CONTRACTOR pursuant to this Agreement shall be in the capacity of an independent contractor and not as an agent or employee of CITY. CONTRACTOR shall supervise the performance of its services and shall be entitled to control the manner and means by which its services are to be performed, subject to the terms of this Agreement. There is no intended third-party beneficiary to this Agreement.

**Section 20. Right-Of-Access.**

CITY will obtain and/or furnish right-of-access on any project site for CONTRACTOR to perform any required studies, surveys, tests or other necessary investigations in relation to the Scope of Services. CONTRACTOR will take reasonable precautions to minimize damage to the personal or real property in the performance of such surveys, tests, studies and investigations.

**Section 21. Notice.**

Any notice required or permitted to be delivered hereunder may be sent by first class mail, overnight courier or by confirmed telefax or facsimile to the address specified below, or to such other party or address as either party may designate in writing, and shall be deemed received three (3) days after delivery set forth herein:

| | |
|---|---|
| If to CITY: | Wesley S. Pierson, City Manager<br>City of Town of Addison<br>5300 Belt Line Road<br>Town of Addison, Texas 75254 |
| With copy to: | Whitt L. Wyatt, City Attorney<br>Wood Banowsky, PLLC<br>3710 Rawlins St., Suite 1000<br>Dallas, Texas 75219 |
| If to CONTRACTOR: | Fuquay, Inc.<br>4861 Old Hwy 81<br>New Braunfels, Texas 78132 |

**Section 22. Counterparts**

This Agreement may be executed by the parties hereto in separate counterparts, each of which when so executed and delivered shall be an original, but all such counterparts shall together constitute one and the same instrument. Each counterpart may consist of any number of copies hereof each signed by less than all, but together signed by all of the parties hereto.

**Section 23. Recitals; Exhibits.**

All recitals and exhibits attached hereto are incorporated and made a part hereof for all purposes.

**Section 24. Survival of Obligations.**

Any of the representations and obligations of the parties, as well as any rights and benefits of the parties pertaining to a period of time following the termination of this Agreement shall survive termination.

**Section 25. Sales and Use Taxes**

CONTRACTOR understands and acknowledges that CITY is a governmental entity and exempt from the payment of sales and use taxes for certain materials and equipment conveyed to City as part of this Project or otherwise incorporated into the Project. CITY agrees to provide CONTRACTOR such documentation as may otherwise be required by state law to allow CONTRACTOR to avoid payment of sales and uses taxes for materials and equipment with respect to the Project to the extent allowed by law.

**Section 26. Audits and Records.**

CONTRACTOR agrees that during the term hereof the CITY and its representatives may, during normal business hours and as often as deemed necessary, inspect, audit, examine and reproduce any and all of CONTRACTOR's records relating to the services provided pursuant to this Agreement for a period of one year following the date of completion of services as determined by the CITY or date of termination if sooner.

**Section 27. Conflicts of Interests.**

CONTRACTOR represents that no official or employee of the CITY has any direct or indirect pecuniary interest in this Agreement.

**Section 28. Hazardous Materials.**

CONTRACTOR shall report the presence and location of any hazardous materials it notices or which a contractor of similar skill and experience should have noticed to the CITY.

**Section 29. No Boycott Israel and/or No Industry Discrimination.**

Pursuant to Texas Government Code Chapter 2270, the CONTRACTOR's execution of this Agreement shall serve as verification that the Organization does not presently boycott Israel and will not boycott Israel during the term of this Agreement. Pursuant to Texas Government Code Chapter 2251, the CONTRACTOR's execution of this Agreement shall serve as verification that the Organization does not current discriminate against firearm and ammunition industries and will not for the term of the contract. Discriminating means refusing to deal with, terminating business activities with, or otherwise taking any action that is intended to penalize, inflict economic harm on, or limit commercial relations specifically with the firearm or ammunition industry or with a person or entity doing business in the firearm or ammunition industry, but does not include an action made for ordinary business purposes.

[REMAINDER OF PAGE INTENTIONALLY LEFT BLANK -
SIGNATURE PAGE FOLLOWS]

IN WITNESS WHEREOF, the parties have executed and delivered this Agreement as of the date of last execution hereof.

**FOR CITY:**

**Town of Addison, Texas**

By:_____
Wesley S. Pierson, City Manager

Date: _____

ATTEST:

By:_____
Irma Parker, City Secretary

**FOR CONTRACTOR:**

**Fuquay, Inc.**

By: _____

Name: DAVID KALLFELZ

Title: PRESIDENT

Date: 12/13/2021

**EXHIBIT A**

**Scope of Services**
Proposal #635-21

(attached)

FUQUAY, INC.

4861 Old Hwy 81, New Braunfels, TX 78132 Phone (830) 606-1882 Fax (830) 606-1885

BuyBoard Cooperative Purchasing

# PROPOSAL

**DATE:** October 28, 2021
**PROJECT:** CITY OF ADDISON MANHOLE REHABILITATION

## Cured In Place Pipe CIPP for Pipeline Rehabilitation #635-21

| | | | | | | LIST PRICING | | MEMBER PRICING | | | PROJECT SPECIFIC DISCOUNTED PRICING | |
|---|---|---|---|---|---|---|---|---|---|---|---|---|
| **ITEM 22** | | **Structure (Manhole) Rehabilitation and Corrosion Protection and Related Items** | | | | | | | | | | |
| | | **MH 1** | | | | | | | | | | |
| Section II 22 | Item | 22104 | Inflow & Infiltration Repair -- Injection of Chemical Grout Material | GAL | 1 | $267.50 | $267.50 | -$18.73 | $248.78 | $248.78 | $235.00 | $235.00 |
| Section II 22 | Item | 22105 | Inflow & Infiltration Repair -- Injection of Chemical Grout Material-Labor & Equipment | HR | 1 | $203.50 | $203.50 | -$14.25 | $189.26 | $189.26 | $180.00 | $180.00 |
| Section II 22 | Item | 22106 | Manhole Bench and Invert Repair 4' Diameter Base | EA | 1 | $669.00 | $669.00 | -$46.83 | $622.17 | $622.17 | $500.00 | $500.00 |
| Section II 22 | Item | 22110 | Structure Repair (any size) | SQFT | 25 | $48.00 | $1,200.00 | -$3.36 | $44.64 | $1,116.00 | $41.00 | $1,025.00 |
| Section II 22 | Item | 22118 | Manhole Rehabilitation - Polyurethane (PCM) only -- 250 m ils thickness | SQFT | 94 | $27.00 | $2,538.00 | -$1.89 | $25.11 | $2,360.34 | $25.00 | $2,350.00 |
| Section II 22 | Item | 22130 | Travel and Mobilization- Manhole Rehabilitation Crew from New Braunfels, TX | MILE | 260 | $16.00 | $4,160.00 | -$1.12 | $14.88 | $3,868.80 | $0.50 | $130.00 |
| | | | | | | | | | | | TOTAL | $4,420.00 |
| | | **MH 2** | | | | | | | | | | |
| Section II 22 | Item | 22104 | Inflow & Infiltration Repair -- Injection of Chemical Grout Material | GAL | 1 | $267.50 | $267.50 | -$18.73 | $248.78 | $248.78 | $235.00 | $235.00 |
| Section II 22 | Item | 22105 | Inflow & Infiltration Repair -- Injection of Chemical Grout Material-Labor & Equipment | HR | 1 | $203.50 | $203.50 | -$14.25 | $189.26 | $189.26 | $180.00 | $180.00 |
| Section II 22 | Item | 22118 | Manhole Rehabilitation - Polyurethane (PCM) only -- 250 m ils thickness | SQFT | 113 | $27.00 | $3,051.00 | -$1.89 | $25.11 | $2,837.43 | $25.00 | $2,825.00 |
| Section II 22 | Item | 22130 | Travel and Mobilization- Manhole Rehabilitation Crew from New Braunfels, TX | MILE | 260 | $16.00 | $4,160.00 | -$1.12 | $14.88 | $3,868.80 | $0.50 | $130.00 |
| | | | | | | | | | | | TOTAL | $3,370.00 |
| | | **MH 3** | | | | | | | | | | |
| Section II 22 | Item | 22104 | Inflow & Infiltration Repair -- Injection of Chemical Grout Material | GAL | 1 | $267.50 | $267.50 | -$18.73 | $248.78 | $248.78 | $235.00 | $235.00 |
| Section II 22 | Item | 22105 | Inflow & Infiltration Repair -- Injection of Chemical Grout Material-Labor & Equipment | HR | 1 | $203.50 | $203.50 | -$14.25 | $189.26 | $189.26 | $180.00 | $180.00 |
| Section II 22 | Item | 22113 | New manhole frame and cover (Price only includes labor, City of Addison will provide new ring and cover) | EA | 1 | $1,872.50 | $1,872.50 | -$131.08 | $1,741.43 | $1,741.43 | $975.00 | $975.00 |
| Section II 22 | Item | 22118 | Manhole Rehabilitation - Polyurethane (PCM) only -- 250 m ils thickness | SQFT | 145 | $27.00 | $3,915.00 | -$1.89 | $25.11 | $3,640.95 | $25.00 | $3,625.00 |
| Section II 22 | Item | 22129 | Install Ring Encasement | EA | 1 | $856.00 | $856.00 | -$59.92 | $796.08 | $796.08 | $725.00 | $725.00 |
| Section II 22 | Item | 22130 | Travel and Mobilization- Manhole Rehabilitation Crew from New Braunfels, TX | MILE | 260 | $16.00 | $4,160.00 | -$1.12 | $14.88 | $3,868.80 | $0.50 | $130.00 |
| | | | | | | | | | | | TOTAL | $5,870.00 |
| | | **MH 4** | | | | | | | | | | |
| Section II 22 | Item | 22104 | Inflow & Infiltration Repair -- Injection of Chemical Grout Material | GAL | 1 | $267.50 | $267.50 | -$18.73 | $248.78 | $248.78 | $235.00 | $235.00 |
| Section II 22 | Item | 22105 | Inflow & Infiltration Repair -- Injection of Chemical Grout Material-Labor & Equipment | HR | 1 | $203.50 | $203.50 | -$14.25 | $189.26 | $189.26 | $180.00 | $180.00 |
| Section II 22 | Item | 22113 | New manhole frame and cover (Price only includes labor, City of Addison will provide new ring and cover) | EA | 1 | $1,872.50 | $1,872.50 | -$131.08 | $1,741.43 | $1,741.43 | $975.00 | $975.00 |
| Section II 22 | Item | 22118 | Manhole Rehabilitation - Polyurethane (PCM) only -- 250 m ils thickness | SQFT | 151 | $27.00 | $4,077.00 | -$1.89 | $25.11 | $3,791.61 | $25.00 | $3,775.00 |
| Section II 22 | Item | 22129 | Install Ring Encasement | EA | 1 | $856.00 | $856.00 | -$59.92 | $796.08 | $796.08 | $725.00 | $725.00 |
| Section II 22 | Item | 22130 | Travel and Mobilization- Manhole Rehabilitation Crew from New Braunfels, TX | MILE | 260 | $16.00 | $4,160.00 | -$1.12 | $14.88 | $3,868.80 | $0.50 | $130.00 |
| | | | | | | | | | | | TOTAL | $6,020.00 |

| | | | | | | | | | | | | | |
|---|---|---|---|---|---|---|---|---|---|---|---|---|---|
| | | **MH 5** | | | | | | | | | | | |
| Section II 22 | Item | 22104 | Inflow & Infiltration Repair -- Injection of Chemical Grout Material | GAL | 1 | | $267.50 | $267.50 | | -$18.73 | $248.78 | $248.78 | | $235.00 | $235.00 |
| Section II 22 | Item | 22105 | Inflow & Infiltration Repair -- Injection of Chemical Grout Material-Labor & Equipment | HR | 1 | | $203.50 | $203.50 | | -$14.25 | $189.26 | $189.26 | | $180.00 | $180.00 |
| Section II 22 | Item | 22113 | New manhole frame and cover (Price only includes labor, City of Addison will provide new ring and cover) | EA | 1 | | $1,872.50 | $1,872.50 | | -$131.08 | $1,741.43 | $1,741.43 | | $975.00 | $975.00 |
| Section II 22 | Item | 22118 | Manhole Rehabilitation - Polyurethane (PCM) only -- 250 mils thickness | SQFT | 170 | | $27.00 | $4,590.00 | | -$1.89 | $25.11 | $4,268.70 | | $25.00 | $4,250.00 |
| Section II 22 | Item | 22129 | Install Ring Encasement | EA | 1 | | $856.00 | $856.00 | | -$59.92 | $796.08 | $796.08 | | $725.00 | $725.00 |
| Section II 22 | Item | 22130 | Travel and Mobilization- Manhole Rehabilitation Crew from New Braunfels, TX | M LE | 260 | | $16.00 | $4,160.00 | | -$1.12 | $14.88 | $3,868.80 | | $0.50 | $130.00 |
| | | | | | | | | | | | | | | **TOTAL** | **$6,495.00** |
| | | **MH 6** | | | | | | | | | | | |
| Section II 22 | Item | 22103 | Condition Standards and Repair Methods -- Condition 3 | SQFT | 138 | | $45.00 | $6,210.00 | | -$3.15 | $41.85 | $5,775.30 | | $37.00 | $5,106.00 |
| Section II 22 | Item | 22104 | Inflow & Infiltration Repair -- Injection of Chemical Grout Material | GAL | 2 | | $267.50 | $535.00 | | -$18.73 | $248.78 | $497.55 | | $235.00 | $470.00 |
| Section II 22 | Item | 22105 | Inflow & Infiltration Repair -- Injection of Chemical Grout Material-Labor & Equipment | HR | 1 | | $203.50 | $203.50 | | -$14.25 | $189.26 | $189.26 | | $180.00 | $180.00 |
| Section II 22 | Item | 22130 | Travel and Mobilization- Manhole Rehabilitation Crew from New Braunfels, TX | M LE | 260 | | $16.00 | $4,160.00 | | -$1.12 | $14.88 | $3,868.80 | | $0.50 | $130.00 |
| | | | | | | | | | | | | | | **TOTAL** | **$5,886.00** |
| | | **MH 7** | | | | | | | | | | | |
| Section II 22 | Item | 22103 | Condition Standards and Repair Methods -- Condition 3 | SQFT | 163 | | $45.00 | $7,335.00 | | -$3.15 | $41.85 | $6,821.55 | | $37.00 | $6,031.00 |
| Section II 22 | Item | 22104 | Inflow & Infiltration Repair -- Injection of Chemical Grout Material | GAL | 3 | | $267.50 | $802.50 | | -$18.73 | $248.78 | $746.33 | | $235.00 | $705.00 |
| Section II 22 | Item | 22105 | Inflow & Infiltration Repair -- Injection of Chemical Grout Material-Labor & Equipment | HR | 3 | | $203.50 | $610.50 | | -$14.25 | $189.26 | $567.77 | | $180.00 | $540.00 |
| Section II 22 | Item | 22130 | Travel and Mobilization- Manhole Rehabilitation Crew from New Braunfels, TX | M LE | 260 | | $16.00 | $4,160.00 | | -$1.12 | $14.88 | $3,868.80 | | $0.50 | $130.00 |
| | | | | | | | | | | | | | | **TOTAL** | **$7,406.00** |
| | | | | | | | | | | | | | | **MH 1-7 TOTAL** | **$39,467.00** |
| | | **SUPPLEMENTAL (CONTINGENCY) ITEMS FOR UNFORSEEN REPAIRS** | | | | | | | | | | | |
| Section II 22 | Item | 22103 | Condition Standards and Repair Methods -- Condition 3 | SQFT | 540.54 | | $45.00 | $24,324.33 | | -$3.15 | $41.85 | $22,621.62 | | $37.00 | $20,000.00 |
| | | | | | | | | | | | | | | **CONTINGENCY TOTAL** | **$20,000.00** |
| | | | | | | | | | | | | | | **MH 1-7 TOTAL W/ CONTIGENCY SUPPLEMENTAL ITEMS FOR UNFORSEEN REPAIRS** | **$59,467.00** |

**ALL MATERIAL IS GUARANTEED TO BE AS SPECIFIED, AND THE WORK TO BE PERFORMED IN ACCORDANCE WITH THE DRAWING AND SPECIFICATIONS SUBMITTED FOR THE ABOVE WORK AND COMPLETED IN A SUBSTANTIAL WORKMANLIKE MANNER. ANY ALTERATION OR DEVIATION FROM SPECIFICATIONS AND DRAWINGS INVOLVING EXTRA COSTS WILL BE EXECUTED ONLY UPON WRITTEN ORDERS AND WILL BECOME AN EXTRA CHARGE OVER AND ABOVE THE QUOTATION. WORKER'S COMPENSATION AND PUBLIC LIABILITY INSURANCE ON ABOVE WORK TO BE FURNISHED BY FUQUAY, INC. THERE MAY BE AN ADDITIONAL CHARGE FOR PROVIDING A WAIVER OF SUBROGATION AND/OR BEING LISTED AS AN ADDITIONAL INSURED ON FUQUAY'S INSURANCE. THE CHARGE SHALL BE EQUAL TO THE AMOUNT CHARGED TO FUQUAY FOR SAID SERVICE.**

**EXCLUSIONS:**

**BOND, SALES TAX, AND OCP**
**PERMITS, BURDENS, FEES**
**WASTE HAUL-OFF**
**SURVEYING**
**SITE CLEARING**
**BARRICADES, SIGNS, TRAFFIC HANDLING**
**INFILTRATION REPAIR**
**DEWATERING**
**ALL BYPASS PUMPING AND PIPE PLUGGING**
**PROVIDING AND/OR PERFORMING ANY TESTING**

**TERMS:**

PAYMENT FOR SERVICES SHALL BE DUE AND PAYABLE WITHIN THIRTY DAYS OF THE DATE/MONTH THE WORK IS PERFORMED. THIS PROPOSAL MAY BE WITHDRAWN BY US IF NOT ACCEPTED WITHIN THIRTY DAYS.

RESPECTFULLY SUBMITTED,

FUQUAY, INC.

ACCEPTED BY: _____

COMPANY: _____

NAME: _____

TITLE: _____

**Council Meeting** **7.**

**Meeting Date:** 01/11/2022

**Department:** Infrastructure- Development Services

**Pillars:** Excellence in Asset Management

**Milestones:** Implement the Asset Management Plan in accordance with the Asset Management Policy, utilizing information systems

---

**AGENDA CAPTION:**

Consider Action on a **Resolution Approving a Professional Engineering and Design Services Agreement Between the Town of Addison and Kleinfelder, Inc. for the Surveyor Pump Station Electrical Improvements and Authorizing the City Manager to Execute the Agreement** in an Amount Not to Exceed $103,599.

**BACKGROUND:**

The purpose of this item is to request approval of a Professional Services Agreement with Kleinfelder, Inc. to provide the Town with professional engineering services for the Surveyor Pump Station Electrical Improvements Project. The electrical and the control system for the Surveyor Pump Station was installed in the 1980s and has reached the end of its service life. After approximately 40 years of service, most of the electrical components at the pump station are difficult to replace due to their age and parts for the current components are difficult to acquire.

The scope of this project includes upgrades to the pump station's electrical critical infrastructure and the control system to bring it to the current standard and to improve system reliability and safety. This will include instrumentation and controls upgrades, installation of new wiring and associated conduit, replacement, and testing of electrical distribution components and controls for the existing motor control center serving all three pumps at the Surveyor Road Pump Station. The comprehensive breakdown of Kleinfelder's services can be found in Exhibit A of the agreement.

Kleinfelder, Inc. is uniquely qualified to perform the design work because of prior experience and familiarity with the Town's Public Utility Infrastructure System. The work associated with this project is included in the overall project budget of $980,000 in the Fiscal Year 2022 Utility Capital Improvement Funds. The design for this project is expected to take approximately 7 months to complete. The construction is anticipated to be bid in early fall of 2022.

**RECOMMENDATION:**

Administration recommends approval.

---

**Attachments**

Resolution - Kleinfelder PSA Surveyor Electrical

---

**RESOLUTION NO. _____**

**A RESOLUTION OF THE CITY COUNCIL OF THE TOWN OF ADDISON, TEXAS APPROVING AN AGREEMENT WITH KLEINFELDER INC. FOR PROFESSIONAL ENGINEERING AND DESIGN SERVICES IN CONNECTION WITH SURVEYOR PUMP STATION ELECTRICAL IMPROVEMENTS; AUTHORIZING THE CITY MANAGER TO EXECUTE THE AGREEMENT; AND PROVIDING AN EFFECTIVE DATE.**

**WHEREAS,** the City Council desires to authorize an agreement with Kleinfelder Inc. to provide professional engineering and design services in connection with Surveyor Pump Station Electrical Improvements within the City (the "Agreement").

**NOW, THEREFORE, BE IT RESOLVED BY THE CITY COUNCIL OF THE TOWN OF ADDISON, TEXAS:**

**SECTION 1**. The City Council hereby approves the Agreement between the Town of Addison and Kleinfelder Inc. in an amount not to exceed of $103,599 for professional engineering and design services in connection with connection with Surveyor Pump Station Electrical Improvements within the City. A true and correct copy of the Agreement is attached to this Resolution as **Exhibit A** and the City Manager is hereby authorized to execute the same.

**SECTION 2.** This Resolution shall take effect from and after its date of adoption.

**DULY RESOLVED AND ADOPTED** by the City Council of the Town of Addison, Texas, on this the ***11th*** day of ***JANUARY 2022.***

**TOWN OF ADDISON, TEXAS**

_____
Joe Chow, Mayor

**ATTEST:**

_____
Irma Parker, City Secretary

# Exhibit A

## PROFESSIONAL SERVICES AGREEMENT
## Surveyor Pump Station Electrical Improvements

This Professional Services Agreement ("Agreement") is made by and between the **Town of Addison** ("City"), and **Kleinfelder, Inc.** (**"**Professional") (each a "Party" and collectively the "Parties"), acting by and through their respective authorized representatives.

## RECITALS

**WHEREAS**, City desires Professional to perform certain work and services set forth in Section 1, Scope of Services and

**WHEREAS**, Professional has expressed a willingness to perform said work and services, hereinafter referred to only as "services", specified in said Scope of Services, and enumerated under Section 1, of this Agreement;

**NOW, THEREFORE**, for and in consideration of the covenants and promises made one to the other herein, City and Professional agree as follows:

### Section 1. Scope of Services

Upon issuance of a written notice to proceed by City, Professional agrees to provide to City the professional services for the Surveyor Pump Station Electrical Improvements ("Project"), as set forth in the Scope of Services attached hereto as Exhibit "A" and incorporated herein by reference (the "Scope of Services").

### Section 2. Term of Agreement

The term of this Agreement shall begin on the last date of execution hereof (the "Effective Date") and shall continue until Professional completes the services required herein, unless sooner terminated as provided in Section 8, below.

### Section 3. Professional Obligations

A. Professional shall devote such time as reasonably necessary for the performance of the work under this Agreement in accordance to the Standard of Care. Should City require additional services not included under this Agreement, Professional shall make reasonable effort to provide such additional services in accordance with the fee schedule set forth in Exhibit "A", attached hereto and incorporated herein by reference, and within the time schedule mutually agreed upon with City; and in accordance to the Standard of Care, defined herein as performing work in a manner consistent with that level of care and skill ordinarily exercised by other members of Professional's profession practicing in the same locality under similar conditions and at the date the work is provided ("Standard of Care").

B. To the extent reasonably necessary for Professional to perform the services under this Agreement, Professional shall be authorized to engage the services of any agents, assistants,

persons, or corporations that Professional may deem proper to aid or assist in the performance of the services under this Agreement with the prior written approval of City. The cost of such personnel and assistance shall be a reimbursable expense to Professional only if authorized in writing in advance by City.

C. Professional shall furnish and pay for all labor, tools, materials, equipment, supplies, transportation and management necessary to perform all services set forth in the Scope of Services.

**Section 4. Payment**

A. City agrees to pay Professional for all services authorized in writing and properly performed by Professional in accordance with the payment schedule set forth in Exhibit "A," attached hereto and incorporated herein by reference, subject to additions or deletions for changes or extras agreed upon in writing. All payments to Professional by City shall be based on detailed monthly invoices submitted by Professional for work performed and accepted by City, less any previous payments. Payment will be due within 30 days of the City's receipt of an approved invoice.

B. City reserves the right to delay, without penalty, any payment to Professional when, in the opinion of City, Professional has not made satisfactory progress on the Project in accordance to the Standard of Care and as described in the Scope of Services.

C. The total compensation to Professional shall be as specified in payment schedule set forth in Exhibit "A", which shall not exceed **One Hundred Three Thousand Five Hundred and Ninety Nine Dollars ($103,599)**. City may deduct from any amounts due or to become due to Professional any sum or sums owing by Professional to City under this Agreement. In the event of any material breach by Professional of any provision or obligation of this Agreement, or in the event of the assertion by other parties of any claim or lien against City, or City's premises, arising out of Professional's performance of this Agreement, City shall have the right to retain out of any payments due or to become due to Professional an amount sufficient to completely protect City from any and all loss, damage or expense therefrom, until the breach, claim or lien has been satisfactorily remedied or adjusted by Professional.

**Section 5. Responsibilities**

A. Professional shall be responsible for the professional quality, technical accuracy, and the coordination of all designs, drawings, specifications, plans and other services furnished by Professional under this Agreement in accordance to the Standard of Care. Professional shall, without additional compensation, re-perform any non-conforming work in the design, drawings, specifications, plans and other services, provided such non-conforming work is identified within twelve (12) months from completion of Professional's services under this Agreement.

B. Neither City's review, approval/acceptance of, nor payment for any of the services required under this Agreement, shall be construed to operate as a waiver of any rights under this Agreement or of any cause of action arising out of the performance of this Agreement, and

Professional shall be and remain liable to City in accordance with applicable law for all damages to City caused by Professional's negligent performance of any of the services furnished under this Agreement.

C. The rights and remedies of City under this Agreement are as provided by law.

**Section 6. Time for Performance**

A. Professional shall perform all services as provided for under this Agreement in a proper, efficient, timely, and professional manner in accordance with City's requirements consistent with sound engineering principles.

B. In the event Professional's performance of this Agreement is delayed or interfered with by acts of the City or others, Professional may request an extension of time for the performance of same as hereinafter provided. Unless otherwise agreed by the parties, Professional shall not be entitled to any increase in fee or price, or to damages or additional compensation as a consequence of such delays.

C. No allowance of any extension of time, for any cause whatever, shall be claimed or made to Professional, unless Professional shall have made written request upon City for such extension within three (3) business days after the cause for such extension occurred, and unless City and Professional have agreed in writing upon the allowance of additional time to be made.

**Section 7. Documents**

A. All surveys, studies, proposals, applications, drawings, plans, specifications and other documents, including those in electronic form, first prepared by Professional and its consultants, subcontractors, agents, representatives, and/or employees in connection with this Agreement ("Project Documents") are intended for the use and benefit of City. Professional and its consultants, subcontractors, agents, representatives, and/or employees shall be deemed the authors of their respective part of the Project Documents. Notwithstanding, upon payment by City as required by this Agreement, City shall own, have, keep and retain all rights, title and interest in and to all Project Documents, including all ownership, common law, statutory, and other reserved rights, including copyrights (except copyrights held by the Professional) in and to all Project Documents, whether in draft form or final form, which are produced at City's request and in furtherance of this Agreement. City shall have full authority to authorize contractor(s), subcontractors, sub-subcontractors, City consultants, and material or equipment suppliers to reproduce applicable portions of the Project Documents to and for use in their execution of the work or for any other purpose. All materials and reports prepared by Professional in connection with this Agreement are "works for hire" and shall be the property of City upon payment of Professional as provided in this Agreement. City shall have the right to publish, disclose, distribute and otherwise use Project Documents in accordance with the Engineering Practice Act of the State of Texas (Texas Occupation Code, Chapter 1001, as amended) and/or Texas Occupations Code, Chapter 1051, as amended. Professional shall, upon completion of the services and full payment for Professional's services by the City, or earlier termination and appropriate compensation as provided by this Agreement, provide City with reproductions of all materials, reports, and exhibits

prepared by Professional pursuant to this Agreement in a TIFF, JPEG or PDF format, and a DXF format in current version of AutoCAD with NAD-83 coordinate format of all such instruments of service to the City.

B. All instruments of service (including plans, specifications, drawings, reports, designs, computations, computer programs, computer code, software, estimates, surveys, other data or work items, etc.) first prepared under this Agreement shall be submitted for approval of City. All instruments of service shall be professionally sealed as may be required by law or by City.

C. Acceptance and approval of the Project Documents by City shall not constitute nor be deemed a release of the responsibility and liability of Professional, its employees, associates, agents and consultants for the accuracy or competency of their designs, working drawings and specifications, or other documents and work; nor shall such approval be deemed to be an assumption of such responsibility by City for any defect in the designs, working drawings and specifications, or other documents prepared by Professional, its employees, contractor, agents and consultants.

D. The Project Documents are not intended to be suitable for re-use by the City or others on any project other than the Project contemplated by this Agreement. Any re-use, without the prior written verification or adaptation by the Professional for the specific purpose intended, will be at City's sole risk and without liability or legal exposure to Professional.

**Section 8. <u>Termination</u>**

A. City may suspend or terminate this Agreement for cause or without cause at any time by giving written notice to Professional. In the event suspension or termination is without cause, payment to Professional, in accordance with the terms of this Agreement, will be made on the basis of services reasonably determined by City to be satisfactorily performed to the date of suspension or termination. Such payment will be due upon delivery of all instruments of service to City.

B. Should City require a modification of this Agreement with Professional, and in the event City and Professional fail to agree upon a modification to this Agreement, City shall have the option of terminating this Agreement and Professional's services hereunder at no additional cost other than the payment to Professional, in accordance with the terms of this Agreement, for the services reasonably determined by City to be properly performed by Professional prior to such termination date.

C. <u>Termination for Force Majeure</u>. To the extent either Party of this agreement shall be wholly or partially prevented from the performance of the term specified, or of any obligation or duty placed on such party by reason of or through work strikes, stoppage of labor, riot, fire, flood, acts of war, insurrection, court judgment, act of God, or other specific cause reasonably beyond the parties control and not attributable to its malfeasance, neglect or nonfeasance. In such

event, the time for performance of such obligation or duty shall be suspended until such disability to perform is removed.

**Section 9. Insurance**

A. Professional shall during the term hereof maintain in full force and effect the following insurance:

(i) A commercial general liability policy of insurance for bodily injury, death and property damage insuring against all claims, demands or actions relating to the Professional's performance of services pursuant to this Agreement with a minimum combined single limit of not less than $1,000,000.00 per occurrence for injury to persons (including death), and for property damage;

(ii) An automobile liability insurance policy covering any vehicles owned and/or operated by Professional, its officers, agents, and employees, and used in the performance of this Agreement with policy limits of not less than $500,000.00 combined single limit and aggregate for bodily injury and property damage;

(iii) Statutory Worker's Compensation Insurance at the statutory limits and Employers' Liability covering all of Professional's employees involved in the provision of services under this Agreement with policy limit of not less than $500,000.00; and

(iv) Professional Liability covering negligent acts, errors and omissions in the performance of professional services with policy limit of not less than $1,000,000.00 per claim and $1,000,000.00 in the aggregate.

B. All insurance and certificate(s) of insurance shall contain the following provisions:

(i) Name the City, its officers, and employees as additional insureds as to all applicable coverage (not including the Workers Compensation Insurance and Professional Liability);

(ii) Provide for at least thirty (30) days prior written notice to the City for cancellation or non-renewal of the insurance or reduction in coverage limits; and

(iii) Provide for a waiver of subrogation against the City for injuries, including death, property damage, or any other loss to the extent the same is covered by the proceeds of insurance (not including the Professional Liability Insurance).

C. All insurance companies providing the required insurance shall be authorized to transact business in Texas and rated at least "A" by AM Best or other equivalent rating service.

D. A certificate of insurance evidencing the required insurance and all endorsements shall be delivered to City prior to commencement of services.

**Section 12. Indemnification.**

**CITY SHALL NOT BE LIABLE FOR ANY LOSS, DAMAGE, OR INJURY OF ANY KIND OR CHARACTER TO ANY PERSON OR PROPERTY ARISING FROM THE SERVICES OF PROFESSIONAL PURSUANT TO THIS AGREEMENT. PROFESSIONAL HEREBY WAIVES ALL CLAIMS AGAINST CITY, ITS OFFICERS, AGENTS AND EMPLOYEES (COLLECTIVELY REFERRED TO IN THIS SECTION AS "CITY INDEMNITEES") FOR DAMAGE TO ANY PROPERTY OR INJURY TO, OR DEATH OF, ANY PERSON ARISING AT ANY TIME AND FROM ANY CAUSE OTHER THAN THE NEGLIGENCE OR WILLFUL MISCONDUCT OF THE CITY INDEMNITEES. PROFESSIONAL AGREES TO INDEMNIFY THE CITY INDEMNITEES FROM AND AGAINST ANY LIABILITIES, DAMAGES, CLAIMS, SUITS, COSTS (INCLUDING COURT COSTS, REASONABLE ATTORNEYS' FEES AND COSTS OF INVESTIGATION) AND ACTIONS BY REASON OF INJURY TO OR DEATH OF ANY PERSON OR DAMAGE TO OR LOSS OF PROPERTY TO THE EXTENT CAUSED BY THE NEGLIGENT PERFORMANCE OF SERVICES UNDER THIS AGREEMENT OR BY REASON OF ANY NEGLIGENT ACT OR OMISSION ON THE PART OF PROFESSIONAL, ITS OFFICERS, DIRECTORS, SERVANTS, EMPLOYEES, REPRESENTATIVES, CONSULTANTS, LICENSEES, SUCCESSORS OR PERMITTED ASSIGNS (EXCEPT WHEN SUCH LIABILITY, CLAIMS, SUITS, COSTS, INJURIES, DEATHS OR DAMAGES ARISE FROM OR ARE ATTRIBUTED TO NEGLIGENCE OF A CITY INDEMNITEE, IN WHOLE OR IN PART, IN WHICH CASE PROFESSIONAL SHALL INDEMNIFY THE CITY INDEMNITEE ONLY TO THE EXTENT OF NEGLIGENCE ATTRIBUTED TO PROFESSIONAL, ITS OFFICERS, AGENTS, OR EMPLOYEES AS DETERMINED BY A COURT OR OTHER FORUM OF COMPETENT JURISDICTION). PROFESSIONAL'S OBLIGATIONS UNDER THIS SECTION SHALL NOT BE LIMITED TO THE LIMITS OF COVERAGE OF INSURANCE MAINTAINED OR REQUIRED TO BE MAINTAINED BY PROFESSIONAL UNDER THIS AGREEMENT. THIS PROVISION SHALL SURVIVE THE TERMINATION OF THIS AGREEMENT. NEITHER PARTY SHALL BE LIABLE TO THE OTHER FOR ANY SPECIAL, INCIDENTAL, INDIRECT, EXEMPLARY, PUNITIVE, PENAL OR CONSEQUENTIAL DAMAGES, HOWEVER ARISING, INCURRED BY EITHER PROFESSIONAL OR CITY OR FOR WHICH EITHER MAY BE LIABLE TO A THIRD PARTY.**

**Section 13. Assignment**

Neither Party may assign or sublet this Agreement, or any part thereof, without the prior written consent of the other Party.

**Section 14**. **Applicable Laws**

Professional shall comply with all Federal, State, County and Municipal laws, ordinances, regulations, safety orders, resolutions and building codes relating or applicable to services to be performed under this Agreement. The laws of the State of Texas shall govern this Agreement; and venue for any action concerning this Agreement shall be in the State District Court of Dallas County, Texas. The Parties agree to submit to the personal and subject matter jurisdiction of said court

**Section 15**. **Default of Professional**

In the event, Professional fails to comply or becomes disabled and unable to comply with the provisions of this Agreement as to the quality or character of the service or time of performance, and the failure is not corrected within ten (10) days after written notice by City to Professional, City may, at its sole discretion without prejudice to any other right or remedy:

A. Terminate this Agreement and be relieved of the payment of any further consideration to Professional except for all work determined by City to be satisfactorily completed prior to termination. Payment for work satisfactorily completed shall be for actual costs, including reasonable salaries and travel expenses of Professional to and from meetings called by City at which Professional is required to attend, but shall not include any loss of profit of Professional. In the event of such termination, City may proceed to complete the services in any manner deemed proper by City, either by the use of its own forces or by re-subletting to others.

B. City may, without terminating this Agreement or taking over the services, furnish the necessary materials, equipment, supplies and/or help necessary to remedy the situation, at the expense of Professional.

**Section 16. Adjustments in Services**

No claims for extra services, additional services or changes in the services will be made by Professional without a written agreement with City prior to the performance of such services.

**Section 17. Execution becomes Effective**

This Agreement will be effective on the date when signed by authorized representatives of Professional and City ("the Effective Date").

**Section 18. Agreement Amendments**

This Agreement contains the entire understanding of the Parties with respect to the subject matter hereof and there are no oral understandings, statements or stipulations bearing upon the meaning or effect of this Agreement which have not been incorporated herein. This Agreement may only be modified, amended, supplemented or waived by a written instrument executed by the Parties except as may be otherwise provided therein.

**Section 19. Severability**.

In the event any one or more of the provisions contained in this Agreement shall for any reason be held to be invalid, illegal, or unenforceable in any respect, such invalidity, illegality or unenforceability shall not affect any other provisions, and the Agreement shall be construed as if such invalid, illegal, or unenforceable provision had never been contained in it.

**Section 20. Independent Contractor**.

It is understood and agreed by and between the Parties that Professional in satisfying the conditions of this Agreement, is acting independently, and that City assumes no responsibility or liabilities to any third party in connection with Professional's actions. All services to be performed by Professional pursuant to this Agreement shall be in the capacity of an independent contractor, and not as an agent or employee of City. Professional shall supervise the performance of its services and shall be entitled to control the manner and means by which its services are to be performed, subject to the terms of this Agreement. There is no intended third party beneficiary to this Agreement.

**Section 21. Right-Of-Access.**

City will obtain and/or furnish right-of-access on any project site for Professional to perform any required studies, surveys, tests or other necessary investigations in relation to the Scope of Services.

**Section 22. Notice.**

Any notice required or permitted to be delivered hereunder may be sent by first class mail, overnight courier or by confirmed telefax or facsimile to the address specified below, or to such other party or address as either party may designate in writing, and shall be deemed received three (3) days after delivery set forth herein:

| | |
|---|---|
| If to City: | Wesley S. Pierson, City Manager<br>Town of Addison<br>16801 Westgrove Dr.<br>Addison, Texas 75001 |
| With copy to: | Whitt Wyatt, City Attorney<br>Wood Banowsky, PLLC<br>3710 Rawlins St., Ste 1000<br>Dallas, Texas 75219 |
| If to Professional: | David R. Boes, PG (TX)<br>VP, Area Manager<br>7805 Mesquite Bend, Suite 100<br>Irving, Texas 75063 |

**Section 23. Counterparts**.

This Agreement may be executed by the Parties in separate counterparts, each of which when so executed and delivered shall be an original, but all such counterparts shall together constitute one and the same instrument. Each counterpart may consist of any number of copies hereof each signed by less than all, but together signed by all of the Parties.

**Section 24. Exhibits**.

The exhibits attached hereto are incorporated herein and made a part hereof for all purposes.

**Section 25. Survival of Obligations**.

Any of the representations and obligations of the Parties, as well as any rights and benefits of the Parties pertaining to a period of time following the termination of this Agreement shall survive termination.

**Section 26. Authorization**.

Each Party represents that it has full capacity and authority to grant all rights and assume all obligations granted and assumed under this Agreement.

**Section 27. Successors and Assigns**.

Subject to the provisions regarding assignment, this Agreement shall be binding on and inure to the benefit of the Parties to it and their respective heirs, executors, administrators, legal representatives, successors and assigns.

**Section 28. Recitals**.

The recitals to this Agreement are incorporated herein.

**Section 29**. **Audits and Records**.

Professional agrees that during the term hereof the City and its representatives may, during normal business hours and as often as deemed necessary, inspect, audit, examine and reproduce any and all of Professional's non-proprietary, project-specific records relating to the services provided pursuant to this Agreement for a period of one year following the date of completion of services as determined by the City or date of termination if sooner.

**Section 30**. **Conflicts of Interests**.

Professional represents that no official or employee of the City has any direct or indirect pecuniary interest in this Agreement.

**Section 31**. **Hazardous Materials; Warranty of Title, Waste Ownership**

Professional shall report the presence and location of any hazardous materials it notices or which an engineer of similar skill and experience should have noticed to the City. Notwithstanding the foregoing or any other provision of this Agreement, Professional will not take title to, will not accept risk of loss with respect to, and will not be responsible for the removal and disposal of any hazardous materials found at the jobsite.

**Section 32**. **No Boycott Israel and/or No Industry Discrimination**.

Pursuant to Texas Government Code Chapter 2270, the Professional's execution of this Agreement shall serve as verification that the Organization does not presently boycott Israel and will not boycott Israel during the term of this Agreement. Pursuant to Texas Government Code Chapter 2251, the Professional's execution of this Agreement shall serve as verification that the Organization does not current discriminate against firearm and ammunition industries and will not for the term of the contract. Discriminating means refusing to deal with, terminating business activities with, or otherwise taking any action that is intended to penalize, inflict economic harm on, or limit commercial relations specifically with the firearm or ammunition industry or with a person or entity doing business in the firearm or ammunition industry, but does not include an action made for ordinary business purposes.

[REMAINDER OF PAGE INTENTIONALLY LEFT BLANK -
SIGNATURE PAGE FOLLOWS]

IN WITNESS WHEREOF, the Parties have executed and delivered this Agreement as of the date of last execution hereof.

**FOR CITY:**

**Town of Addison, Texas**

By:_____
Wesley S. Pierson, City Manager

Date: _____

ATTEST:

By:_____
Irma Parker, City Secretary

**FOR PROFESSIONAL**

**Kleinfelder, Inc.**

By:_____
David R. Boes, VP Area Manager

Date: 11.23.2021

**EXHIBIT "A"**
**SCOPE OF SERVICES**

## PROPOSED PROJECT DESCRIPTION

Town of Addison (Town) would like to make the necessary upgrade to the electrical distribution and controls (ED&C) and instrumentation and controls at the existing Surveyor Road Pump Station. Kleinfelder Inc. will perform the ED&C design as described in the scope of work. Instrumentation and controls upgrades will be done by a vendor contracted directly by the Town.

## SCOPE OF WORK

The work to be performed under this contract includes the engineering design, bid assistance, and construction administration services for ED&C improvements.

### Task 1: PROJECT MANAGEMNET

Task 1.1 – Project Management Services

Kleinfelder's project manager will interface with Town of Addison's (Town) project manager on a regular basis. Manage the project scope of work for a period upto 12 months, including monitoring schedule and budget, making staff assignments to maintain the project schedule, and general management and coordination of project staff and the Client as described below:

Task 1.2 - Develop Health and Safety Plan

Kleinfelder will prepare a Health and Safety Plan (HASP) for the site, including a list of project personnel responsible for health and safety, hazard analysis for the anticipated activities, required personal protective equipment, safety programs, emergency response planning, contingency measures, and forms. Field personnel will be briefed on the plan and will be provided a copy of the HASP. Kleinfelder's field team will consist of engineering staff.

Task 1.3 - Review Available Information.

Our project team will review all the information provided by the Town. Our team may request the following facility information:

- Any existing design plans or record drawing for the electrical component at Surveyor Road Pump Station.
- Any known electrical or instrumentation issue
- Any maintenance record for the Surveyor Road Pump Station

### Task 2: DESIGN PHASE SERVICES

Kleinfelder will provide engineering services for ED&C improvements as shown below:

Task 2.1 – Kick-Off Meeting

Kleinfelder team will attend one (1) kick-off meeting with project team to review the design phase for the project. Kleinfelder will set up the meeting, prepare meeting agenda and provide meeting minutes.

Task 2.2 – Design Services

Our team will prepare a set of construction drawings, specifications, and opinion of probable construction cost for the electrical improvements at Surveyor Road Pump Station that includes:

- Electrical Distribution and Controls:
    - The Pump Station includes three water pumps, one driven by a 200HP motor and the other two by 250HP motors. All motors are 3-phase, 460V.
    - The existing motor control center (MCC) serving thee pumps is to be replaced.
        - The plan is to replace the MCC in kind and in place. The existing conduit between the existing MCC and the pump motors is to be reused. New wire will be installed to each motor.
        - No variable frequency drives (VFDs) will be installed.
- Instrumentation and Controls:
    - The I&C work is to be designed by others.
    - Coordination will be conducted so that our team will include the instrument locations and associated conduit/wiring on the ED&C sheets.
    - The basic P&ID is assumed to remain unchanged (P&ID to be provided with the I&C design).
    - No modification to be made to the building security system.
- Work Definition: This work will include the following administrative services:
    - Our team will provide the following submittals for Owner's review:
        - 90% Design for Owner's review
        - 100% Design for Owner's review
        - Sealed and signed documents for advertisement
        - Conformed documents for construction
    - The duration of this Project is expected to be:
        a. Design Phase: 4-6 months
        b. Construction Phase: 8-12 month
    - Our team will conduct site surveys after notice to proceed is received as needed.
    - Our team will participate in various design team coordinating conference calls (upto 6) to review design progress

Task 2.3 – Preparation of Plans

Intermediate submittals of the construction plans, specifications and contract documents shall be submitted to the Town of Addison at 90%, and 100% completion levels. A maximum of two (2) weeks will be allotted for internal review of the documents by the Town of Addison at each complete level before proceedings to the next level.

Task 2.4 – Design Review Submittals

| Submittal | Drawings | Specifications | Opinion of Cost | No. of Copies |
|---|---|---|---|---|
| 90% | Draft | Draft | Preliminary | 1 |
| 100% | Final | Final | Final | 1 |

It has been assumed that Town of Addison will reproduce and distribute drawings and specifications for bidders during the bid phase.

Task 2.5 – Opinion of Probable Construction Cost

Prepare updated opinion of probable construction costs at the 90% and 100% completion stages.

**Deliverables**

- One (1) electronic copy of rehabilitation drawings and technical specifications at 90% design level.
- One (1) electronic copy of rehabilitation drawings and technical specifications at 100% design level.
- One (1) set of opinion of probable construction cost will be submitted as part of the 90% and 100% design submittal.

**TASK 3 – BID PHASE SERVICES**

Our team will provide Bid Phase services to include the following:

Task 3.1 – Advertising and Pre-bid Meeting

Assist Town staff in advertising for bids. Coordinate agenda, sign in sheet and provide meeting minutes.

Task 3.2 - Plan Distribution

Furnish Plans and specifications to the Town for bid purposes.

Task 3.3 – Addenda

Prepare and distribute up to two (2) addenda required to modify the requirements of the project during bidding, respond to requests for clarification, and issued instructions to bidders as directed by the Town.

Task 3.4 - Bid Tabulation

Prepare a tabulation of bids for the project and verify the bid amounts. Evaluate the lowest and second lowest bidder, including obtaining information on past work history and physical resources.

Task 3.5 - Recommendation for Award

Prepare a recommendation for award of contract or other action and notify bidders of the action taken by the Town of Addison.

Task 3.6 - Provide Conformance Set

Final specifications and contract book will be prepared incorporating the contractors executed contract documents and unit bid prices. Full sized plans that are released for construction shall be supplied as well.

## TASK 4 – CONSTRUCTION DESIGN SUPPORT SERVICES

Our team will provide Construction Administration services to include the following:

Task 4.1 – Construction Coordination Meetings

Kleinfelder team will attend the pre-construction meeting. Kleinfelder team will also attend up to four (4) conference calls during the construction phase with the contractor, subcontractors, and Town staff monthly to discuss the progress of the project.

Task 4.2 – Shop Drawing, Submittal Reviews, and Change Orders

Review shop drawings, submittals, substitutions, up to two (2) change orders, and other documents provided by the contractor to determine compliance with the contract requirements, design intent, and review pay applications. We estimate that approximately fifteen (15) shop drawings submittals will be reviewed. Prepare responses and comments on each submittal and transmit copies of the contractor and Town staff. Maintain a record of all submittals and responses. Routine shop drawings and submittals generally will be reviewed and returned withing seven (7) working days. Critical path items shall be reviewed and returned sooner.

Task 4.3 – Requests for Information

Receive and review submittal of request for information (RFI) for any questions, clarification or revision to the contract documents. Kleinfelder team will coordinate with Town staff and respond to contractor's RFI's. When appropriate, suggestions and alternatives will be provided to the contactor and/or Town staff. A log of RFIs will be maintained. Up to five (5) RFIs are included as a part of this contract.

Task 4.4 - Pay Application Reviews and Approvals

Review Pay Apps provided by the contractor and approvals provided by the Town of Addison Inspector to determine compliance with the contract requirements, design intent, list of items, contract unit prices specified, and work completed, as verified by the Town Inspector. Prepare responses and comments on each submittal and transmit copies to the contractor and Town staff. Maintain a record of all submittals and responses. Routine Pay Apps and Approvals generally will be reviewed and returned withing seven (7) working days.

Task 4.5 – Construction and Start Up Site Visit

Our team will conduct the site visit throughout the project construction for site inspection for the improvements as various stages listed below:

- Initial demolition of MCC
- Initial setting of new MCC
- Initial energization of MCC
- Testing of cable to motors
- Startup of first pump

Task 4.6 – Final Punchlist Site Visit

Our team will conduct a final walk-through site visit to confirm all the improvements are in accordance with the contract documents. The site visit will be scheduled with Client. A punchlist will be with all the outstanding repairs and improvements will prepared for the contract to address. An additional follow up site visit will be completed to confirm the improvements.

Task 4.7 – Record Documents

Utilizing contractor construction record information, prepare and provide an electronic copy containing Record Drawing in digital format (PDF and CAD).

**ANTICIPATED SCHEDULE**

| | |
|---|---|
| Notice to proceed (NTP) for Design: | 1 day |
| Submittal of the 90% design submittal for review: | 8–10 weeks after NTP |
| Review by Client: | 2 weeks |
| Submittal of the 100% design submittal for review: | 3-4 weeks after review comments |
| Review by Client: | 2 weeks |
| Submittal of the Sealed and Signed Submittal: | 1 week after review comments |
| Bid Phase | 4 weeks |
| Construction | 8-12 Months |

**INFORMATION/SERVICES PROVIDED BY CLIENT**

- Town of Addison provide existing data for the Surveyor Road Pump Station.
- Any work to be completed by Prime Controls

**ADDITIONAL SERVICES/ASSUMPTIONS**

The following services are not included in the *Scope of Services* and will be considered as *Additional Services*, if and when they are required and authorized:

- No HVAC or ventilation/heating changes are included in this proposal.
- The I&C instrumentation and control logic will be modified (Prime Controls)
- Opinions of Probable Construction Costs are engineering estimates and are not warranted.
- This proposal does not include any software licenses or hardware in this proposal.

- We will use the same building background CAD file as used during the previous Surveyor GST Rehabilitation Project.
- Preliminary Engineering Report is not included in this scope of work.
- Any other services not specifically included in the above scope.

**COMPENSATION**

Kleinfelder's fee estimate breakdown to complete the scope of work described above is summarized as follows:

| Task No. | Description | Estimated Fee |
|---|---|---|
| 1 | Project Management | $ 6,163.00 |
| 2 | Design Phase Services | $ 62,003.00 |
| 3 | Bid Phase Services | $ 8,349.00 |
| 4 | Construction Design Support Services | $ 27,084.00 |
| **TOTAL FEE** | | **$ 103,599.00** |

**AUTHORIZATION**

To authorize the scope of work described herein, please provide a Professional Services Agreement for our signature. Acceptance of the proposal indicates Client review and understanding of the scope of services.

**LIMITATIONS**

Our work will be performed in a manner consistent with that level of care and skill ordinarily exercised by other members of Kleinfelder's profession practicing in the same locality, under similar conditions, and at the date the services are provided. Our conclusions, opinions, and recommendations will be based on a limited number of observations and data. It is possible that conditions could vary between or beyond the data evaluated. Kleinfelder makes no guarantee or warranty, express or implied, regarding the services, communication (oral or written), report, opinion, or instrument of service provided.

This proposal is valid for a period of 60 days from the date of this proposal. This proposal was prepared specifically for Client and may not be provided to others without Kleinfelder's express permission.

We appreciate the opportunity to submit this proposal and look forward to working with you on this project. If you have any questions or comments, or if the scope of work we developed differs from that which you intended, please contact CP Nawal, PE at (972) 868-5900.

**Council Meeting** **8.**

**Meeting Date:** 01/11/2022

**Department:** Infrastructure- Development Services

**Pillars:** Innovative in Entrepreneurship & Business

**Milestones:** Promote and protect the Addison Way

---

**AGENDA CAPTION:**

Consider Action on a **Resolution Approving a Professional Engineering and Design Services Agreement Between the Town of Addison and Icon Consulting Engineers, Inc. in Connection with Vitruvian Park Public Infrastructure Phase 9, Block 701 to Serve Vitruvian Townhomes and Authorizing the City Manager to Execute the Agreement** in an Amount Not to Exceed $103,980.

**BACKGROUND:**

The purpose of this item is to request approval of a Professional Services Agreement with Icon Consulting Engineers for professional engineering services for the public infrastructure in Phase 9, Block 701 of the Vitruvian Development.

Phase 9, Block 701, is located at the northeast corner of Vitruvian Way and Bella Lane and is a part of the Vitruvian Park development. The Master Facilities Agreement between the Town and UDR provides for, among other things, the allocation and expenditure of the authorized funds that are to design and construct the public infrastructure improvements necessary to support the private development.

The scope of work for the project will include the installation of wastewater and water lines, electrical, lighting, miscellaneous conduits, paving, landscaping, and irrigation.

The project will be phased into two (2) parts to facilitate the on-site private construction activities. After demolition and mass grading operations have been completed by UDR, the public utility improvements will be constructed and completed by the Town. The streetscape and trail improvements will begin later after most of the on-site private building construction has taken place to minimize the impact to pedestrian ways around the perimeter of the Vitruvian Townhomes project during construction.

Icon Consulting Engineers, Inc. (Icon) was selected to perform the design work for the Vitruvian Park Public Infrastructure Phase 9, Block 701 Project because

of their experience and familiarity with the project area. Icon has designed both the public and private portions of the improvements for all phases of the Vitruvian Development, making them uniquely qualified to perform these services due to their extensive knowledge of the entire development.

The design for this project is expected to be completed within five months. The construction is anticipated to be bid in early summer 2022. The Engineer's Opinion of Project Cost for this project is $1,334,944.25. The work associated with this project is included in the overall Phase 9 project budget of approximately $2.63 million in the Vitruvian Bond Funds.

**RECOMMENDATION:**

Administration recommends approval.

---

**Attachments**

Resolution - Professional Services Agreement - Icon

Exhibit -Vitruvian Park Public Infrastructure Phase 9, Block 701

Vitruvian Park Public Infrastructure Funding Information

Icon Engineer's Opinion of Project Cost

---

**RESOLUTION NO. _____**

**A RESOLUTION OF THE CITY COUNCIL OF THE TOWN OF ADDISON, TEXAS APPROVING AN AGREEMENT WITH ICON CONSULTING ENGINEERS, INC. FOR PROFESSIONAL ENGINEERING AND DESIGN SERVICES IN CONNECTION WITH VITRUVIAN PARK PUBLIC INFRASTRUCTURE - PHASE 9, BLOCK 701 TO SERVE VITRUVIAN TOWNHOMES; AUTHORIZING THE CITY MANAGER TO EXECUTE THE AGREEMENT; AND PROVIDING AN EFFECTIVE DATE.**

**WHEREAS,** the City Council desires to authorize an agreement with Icon Consulting Engineers Inc. to provide professional engineering and design services in connection with Vitruvian Park Public Infrastructure Phase 9, Block 701 to serve Vitruvian Townhomes within the City (the "Agreement").

**NOW, THEREFORE, BE IT RESOLVED BY THE CITY COUNCIL OF THE TOWN OF ADDISON, TEXAS:**

**SECTION 1**. The City Council hereby approves the Agreement between the Town of Addison and Icon Consulting Engineers Inc. in an amount not-to-exceed of $103,980 for professional engineering and design services in connection with connection with Vitruvian Park Public Infrastructure Phase 9, Block 701 to serve Vitruvian Townhomes within the City. A true and correct copy of the Agreement is attached to this Resolution as **Exhibit A** and the City Manager is hereby authorized to execute the same.

**SECTION 2.** This Resolution shall take effect from and after its date of adoption.

**DULY RESOLVED AND ADOPTED** by the City Council of the Town of Addison, Texas, on this the ***11th*** day of ***JANUARY 2022.***

**TOWN OF ADDISON, TEXAS**

_____
Joe Chow, Mayor

**ATTEST:**

_____
Irma Parker, City Secretary

**Exhibit A**

**PROFESSIONAL SERVICES AGREEMENT**
for
**Vitruvian Park Infrastructure, Phase 9, Block 701**
to serve
**Vitruvian Townhomes**

This Professional Services Agreement ("Agreement") is made by and between the **Town of Addison, Texas** ("City"), and **Icon Consulting Engineers, Inc.** (**"**Professional") (each a "Party" and collectively the "Parties"), acting by and through their respective authorized representatives.

**RECITALS**

**WHEREAS**, City desires Professional to perform certain work and services set forth in Section 1, Scope of Services and

**WHEREAS**, Professional has expressed a willingness to perform said work and services, hereinafter referred to only as "services", specified in said Scope of Services, and enumerated under Section 1, of this Agreement;

**NOW, THEREFORE**, for and in consideration of the covenants and promises made one to the other herein, City and Professional agree as follows:

**Section 1. Scope of Services**

Upon issuance of a written notice to proceed by City, Professional agrees to provide to City the professional services for the **Vitruvian Park Infrastructure – Phase 9, Block 701 to serve Vitruvian Townhomes** ("Project"), as set forth in the Scope of Services attached hereto as Exhibit "A" and incorporated herein by reference (the "Scope of Services").

**Section 2. Term of Agreement**

The term of this Agreement shall begin on the last date of execution hereof (the "Effective Date") and shall continue until Professional completes the services required herein to the satisfaction of City, unless sooner terminated as provided in Section 8, below.

**Section 3. Professional Obligations**

A. Professional shall devote such time as reasonably necessary for the satisfactory performance of the work under this Agreement. Should City require additional services not included under this Agreement, Professional shall make reasonable effort to provide such additional services in accordance with the fee schedule set forth in Exhibit "A", attached hereto and incorporated herein by reference, and within the time schedule prescribed by City; and without decreasing the effectiveness of the performance of services required under this Agreement.

B. To the extent reasonably necessary for Professional to perform the services under this Agreement, Professional shall be authorized to engage the services of any agents, assistants, persons, or corporations that Professional may deem proper to aid or assist in the performance of the services under this Agreement with the prior written approval of City. The cost of such personnel and assistance shall be a reimbursable expense to Professional only if authorized in writing in advance by City.

C. Professional shall furnish and pay for all labor, tools, materials, equipment, supplies, transportation and management necessary to perform all services set forth in the Scope of Services.

**Section 4. Payment**

A. City agrees to pay Professional for all services authorized in writing and properly performed by Professional in accordance with the payment schedule set forth in Exhibit "A," attached hereto and incorporated herein by reference, subject to additions or deletions for changes or extras agreed upon in writing. All payments to Professional by City shall be based on detailed monthly invoices submitted by Professional for work performed and accepted by City, less any previous payments. Payment will be due within 30 days of the City's receipt of an approved invoice.

B. City reserves the right to delay, without penalty, any payment to Professional when, in the opinion of City, Professional has not made satisfactory progress on the Project as described in the Scope of Services.

C. The total compensation to Professional shall be as specified in payment schedule set forth in Exhibit "A", which shall not exceed **one hundred three thousand nine hundred eighty dollars ($103,980)**. City may deduct from any amounts due or to become due to Professional any sum or sums owing by Professional to City. In the event of any breach by Professional of any provision or obligation of this Agreement, or in the event of the assertion by other parties of any claim or lien against City, or City's premises, arising out of Professional's performance of this Agreement, City shall have the right to retain out of any payments due or to become due to Professional an amount sufficient to completely protect City from any and all loss, damage or expense therefrom, until the breach, claim or lien has been satisfactorily remedied or adjusted by Professional.

**Section 5. Responsibilities**

A. Professional shall be responsible for the professional quality, technical accuracy, and the coordination of all designs, drawings, specifications, plans and other services furnished by Professional under this Agreement. Professional shall, without additional compensation, correct or revise any errors or deficiencies in the design, drawings, specifications, plans and other services.

B. Neither City's review, approval/acceptance of, nor payment for any of the services required under this Agreement, shall be construed to operate as a waiver of any rights under this Agreement or of any cause of action arising out of the performance of this Agreement, and

Professional shall be and remain liable to City in accordance with applicable law for all damages to City caused by Professional's negligent performance of any of the services furnished under this Agreement.

C. The rights and remedies of City under this Agreement are as provided by law.

**Section 6. Time for Performance**

A. Professional shall perform all services as provided for under this Agreement in a proper, efficient, timely, and professional manner in accordance with City's requirements.

B. In the event Professional's performance of this Agreement is delayed or interfered with by acts of the City or others, Professional may request an extension of time for the performance of same as hereinafter provided but shall not be entitled to any increase in fee or price, or to damages or additional compensation as a consequence of such delays.

C. No allowance of any extension of time, for any cause whatever, shall be claimed or made to Professional, unless Professional shall have made written request upon City for such extension within forty-eight (48) hours after the cause for such extension occurred, and unless City and Professional have agreed in writing upon the allowance of additional time to be made.

**Section 7. Documents**

A. All surveys, studies, proposals, applications, drawings, plans, specifications and other documents, including those in electronic form, prepared by Professional and its consultants, subcontractors, agents, representatives, and/or employees in connection with this Agreement ("Project Documents") are intended for the use and benefit of City. Professional and its consultants, subcontractors, agents, representatives, and/or employees shall be deemed the authors of their respective part of the Project Documents. Notwithstanding, upon payment by City as required by this Agreement, City shall own, have, keep and retain all rights, title and interest in and to all Project Documents, including all ownership, common law, statutory, and other reserved rights, including copyrights (except copyrights held by the Professional) in and to all Project Documents, whether in draft form or final form, which are produced at City's request and in furtherance of this Agreement. City shall have full authority to authorize contractor(s), subcontractors, sub-subcontractors, City consultants, and material or equipment suppliers to reproduce applicable portions of the Project Documents to and for use in their execution of the work or for any other purpose. All materials and reports prepared by Professional in connection with this Agreement are "works for hire" and shall be the property of City upon payment of Professional as provided in this Agreement. City shall have the right to publish, disclose, distribute and otherwise use Project Documents in accordance with the Engineering Practice Act of the State of Texas (Texas Occupation Code, Chapter 1001, as amended) and/or Texas Occupations Code, Chapter 1051, as amended. Professional shall, upon completion of the services and full payment for Professional's services by the City, or earlier termination and appropriate compensation as provided by this Agreement, provide City with reproductions of all materials, reports, and exhibits prepared by Professional pursuant to this Agreement in a TIFF, JPEG or PDF format, and a DXF

format in current version of AutoCAD with NAD-83 coordinate format of all such instruments of service to the City.

B. All instruments of service (including plans, specifications, drawings, reports, designs, computations, computer programs, computer code, software, estimates, surveys, other data or work items, etc.) prepared under this Agreement shall be submitted for approval of City. All instruments of service shall be professionally sealed as may be required by law or by City.

C. Acceptance and approval of the Project Documents by City shall not constitute nor be deemed a release of the responsibility and liability of Professional, its employees, associates, agents and consultants for the accuracy or competency of their designs, working drawings and specifications, or other documents and work; nor shall such approval be deemed to be an assumption of such responsibility by City for any defect in the designs, working drawings and specifications, or other documents prepared by Professional, its employees, contractor, agents and consultants.

**Section 8. Termination**

A. City may suspend or terminate this Agreement for cause or without cause at any time by giving written notice to Professional. In the event suspension or termination is without cause, payment to Professional, in accordance with the terms of this Agreement, will be made on the basis of services reasonably determined by City to be satisfactorily performed to the date of suspension or termination. Such payment will be due upon delivery of all instruments of service to City.

B. Should City require a modification of this Agreement with Professional, and in the event City and Professional fail to agree upon a modification to this Agreement, City shall have the option of terminating this Agreement and Professional's services hereunder at no additional cost other than the payment to Professional, in accordance with the terms of this Agreement, for the services reasonably determined by City to be properly performed by Professional prior to such termination date.

C. Termination for Force Majeure. To the extent either Party of this agreement shall be wholly or partially prevented from the performance of the term specified, or of any obligation or duty placed on such party by reason of or through work strikes, stoppage of labor, riot, fire, flood, acts of war, insurrection, court judgment, act of God, or other specific cause reasonably beyond the parties control and not attributable to its malfeasance, neglect or nonfeasance. In such event, the time for performance of such obligation or duty shall be suspended until such disability to perform is removed.

**Section 9. Insurance**

A. Professional shall during the term hereof maintain in full force and effect the following insurance:

(i) A commercial general liability policy of insurance for bodily injury, death and property damage insuring against all claims, demands or actions

relating to the Professional's performance of services pursuant to this Agreement with a minimum combined single limit of not less than $1,000,000.00 per occurrence for injury to persons (including death), and for property damage;

(ii) An automobile liability insurance policy covering any vehicles owned and/or operated by Professional, its officers, agents, and employees, and used in the performance of this Agreement with policy limits of not less than $500,000.00 combined single limit and aggregate for bodily injury and property damage;

(iii) Statutory Worker's Compensation Insurance at the statutory limits and Employers' Liability covering all of Professional's employees involved in the provision of services under this Agreement with policy limit of not less than $500,000.00; and

(iv) Professional Liability covering negligent acts, errors and omissions in the performance of professional services with policy limit of not less than $1,000,000.00 per claim and $1,000,000.00 in the aggregate.

B. All insurance and certificate(s) of insurance shall contain the following provisions:

(i) Name the City, its officers, and employees as additional insureds as to all applicable coverage (not including the Workers Compensation Insurance and Professional Liability);

(ii) Provide for at least thirty (30) days prior written notice to the City for cancellation or non-renewal of the insurance or reduction in coverage limits; and

(iii) Provide for a waiver of subrogation against the City for injuries, including death, property damage, or any other loss to the extent the same is covered by the proceeds of insurance (not including the Professional Liability Insurance).

C. All insurance companies providing the required insurance shall be authorized to transact business in Texas and rated at least "A" by AM Best or other equivalent rating service.

D. A certificate of insurance evidencing the required insurance and all endorsements shall be delivered to City prior to commencement of services.

**Section 12. <u>Indemnification</u>.**

**CITY SHALL NOT BE LIABLE FOR ANY LOSS, DAMAGE, OR INJURY OF ANY KIND OR CHARACTER TO ANY PERSON OR PROPERTY ARISING FROM THE SERVICES OF PROFESSIONAL PURSUANT TO THIS AGREEMENT.**

**PROFESSIONAL HEREBY WAIVES ALL CLAIMS AGAINST CITY, ITS OFFICERS, AGENTS AND EMPLOYEES (COLLECTIVELY REFERRED TO IN THIS SECTION AS "CITY INDEMNITEES") FOR DAMAGE TO ANY PROPERTY OR INJURY TO, OR DEATH OF, ANY PERSON ARISING AT ANY TIME AND FROM ANY CAUSE OTHER THAN THE NEGLIGENCE OR WILLFUL MISCONDUCT OF THE CITY INDEMNITEES. PROFESSIONAL AGREES TO INDEMNIFY AND SAVE HARMLESS THE CITY INDEMNITEES FROM AND AGAINST ANY AND ALL LIABILITIES, DAMAGES, CLAIMS, SUITS, COSTS (INCLUDING COURT COSTS, REASONABLE ATTORNEYS' FEES AND COSTS OF INVESTIGATION) AND ACTIONS OF ANY KIND BY REASON OF INJURY TO OR DEATH OF ANY PERSON OR DAMAGE TO OR LOSS OF PROPERTY TO THE EXTENT CAUSED BY THE NEGLIGENT PERFORMANCE OF SERVICES UNDER THIS AGREEMENT OR BY REASON OF ANY NEGLIGENT ACT OR OMISSION ON THE PART OF PROFESSIONAL, ITS OFFICERS, DIRECTORS, SERVANTS, EMPLOYEES, REPRESENTATIVES, CONSULTANTS, LICENSEES, SUCCESSORS OR PERMITTED ASSIGNS (EXCEPT WHEN SUCH LIABILITY, CLAIMS, SUITS, COSTS, INJURIES, DEATHS OR DAMAGES ARISE FROM OR ARE ATTRIBUTED TO NEGLIGENCE OF A CITY INDEMNITEE, IN WHOLE OR IN PART, IN WHICH CASE PROFESSIONAL SHALL INDEMNIFY THE CITY INDEMNITEE ONLY TO THE EXTENT OR PROPORTION OF NEGLIGENCE ATTRIBUTED TO PROFESSIONAL, ITS OFFICERS, AGENTS, OR EMPLOYEES AS DETERMINED BY A COURT OR OTHER FORUM OF COMPETENT JURISDICTION). PROFESSIONAL'S OBLIGATIONS UNDER THIS SECTION SHALL NOT BE LIMITED TO THE LIMITS OF COVERAGE OF INSURANCE MAINTAINED OR REQUIRED TO BE MAINTAINED BY PROFESSIONAL UNDER THIS AGREEMENT. THIS PROVISION SHALL SURVIVE THE TERMINATION OF THIS AGREEMENT.**

**Section 13**. **Assignment**

Professional shall not assign or sublet this Agreement, or any part thereof, without the prior written consent of City.

**Section 14**. **Applicable Laws**

Professional shall comply with all Federal, State, County and Municipal laws, ordinances, regulations, safety orders, resolutions and building codes relating or applicable to services to be performed under this Agreement. The laws of the State of Texas shall govern this Agreement; and venue for any action concerning this Agreement shall be in the State District Court of Dallas County, Texas. The Parties agree to submit to the personal and subject matter jurisdiction of said court

**Section 15**. **Default of Professional**

In the event, Professional fails to comply or becomes disabled and unable to comply with the provisions of this Agreement as to the quality or character of the service or time of performance, and the failure is not corrected within ten (10) days after written notice by City to Professional, City may, at its sole discretion without prejudice to any other right or remedy:

A. Terminate this Agreement and be relieved of the payment of any further consideration to Professional except for all work determined by City to be satisfactorily completed prior to termination. Payment for work satisfactorily completed shall be for actual costs, including reasonable salaries and travel expenses of Professional to and from meetings called by City at which Professional is required to attend, but shall not include any loss of profit of Professional. In the event of such termination, City may proceed to complete the services in any manner deemed proper by City, either by the use of its own forces or by re-subletting to others.

B. City may, without terminating this Agreement or taking over the services, furnish the necessary materials, equipment, supplies and/or help necessary to remedy the situation, at the expense of Professional.

**Section 16. Adjustments in Services**

No claims for extra services, additional services or changes in the services will be made by Professional without a written agreement with City prior to the performance of such services.

**Section 17. Execution becomes Effective**

This Agreement will be effective on the date when signed by authorized representatives of Professional and City ("the Effective Date").

**Section 18. Agreement Amendments**

This Agreement contains the entire understanding of the Parties with respect to the subject matter hereof and there are no oral understandings, statements or stipulations bearing upon the meaning or effect of this Agreement which have not been incorporated herein. This Agreement may only be modified, amended, supplemented or waived by a written instrument executed by the Parties except as may be otherwise provided therein.

**Section 19. Severability**.

In the event any one or more of the provisions contained in this Agreement shall for any reason be held to be invalid, illegal, or unenforceable in any respect, such invalidity, illegality or unenforceability shall not affect any other provisions, and the Agreement shall be construed as if such invalid, illegal, or unenforceable provision had never been contained in it.

**Section 20. Independent Contractor**.

It is understood and agreed by and between the Parties that Professional in satisfying the conditions of this Agreement, is acting independently, and that City assumes no responsibility or liabilities to any third party in connection with Professional's actions. All services to be performed by Professional pursuant to this Agreement shall be in the capacity of an independent contractor, and not as an agent or employee of City. Professional shall supervise the performance of its services and shall be entitled to control the manner and means by which its services are to be

performed, subject to the terms of this Agreement. There is no intended third party beneficiary to this Agreement.

**Section 21. Right-Of-Access.**

City will obtain and/or furnish right-of-access on any project site for Professional to perform any required studies, surveys, tests or other necessary investigations in relation to the Scope of Services.

**Section 22. Notice.**

Any notice required or permitted to be delivered hereunder may be sent by first class mail, overnight courier or by confirmed telefax or facsimile to the address specified below, or to such other party or address as either party may designate in writing, and shall be deemed received three (3) days after delivery set forth herein:

| | |
|---|---|
| If to City: | Wesley S. Pierson, City Manager<br>Town of Addison, Texas<br>16801 Westgrove Drive<br>Addison, Texas 75001 |
| With copy to: | Whitt Wyatt, City Attorney<br>3710 Rawlins St., Ste 1000<br>Dallas, Texas 75219 |
| If to Professional: | Clayton T. Redinger, Vice President<br>Icon Consulting Engineers, Inc.<br>2840 W. Southlake Blvd., Suite 110<br>Southlake, Texas 76092 |

**Section 23. Counterparts.**

This Agreement may be executed by the Parties in separate counterparts, each of which when so executed and delivered shall be an original, but all such counterparts shall together constitute one and the same instrument. Each counterpart may consist of any number of copies hereof each signed by less than all, but together signed by all of the Parties.

**Section 24. Exhibits**.

The exhibits attached hereto are incorporated herein and made a part hereof for all purposes.

**Section 25. Survival of Obligations**.

Any of the representations and obligations of the Parties, as well as any rights and benefits of the Parties pertaining to a period of time following the termination of this Agreement shall survive termination.

**Section 26. Authorization**.

Each Party represents that it has full capacity and authority to grant all rights and assume all obligations granted and assumed under this Agreement.

**Section 27**. **Successors and Assigns**.

Subject to the provisions regarding assignment, this Agreement shall be binding on and inure to the benefit of the Parties to it and their respective heirs, executors, administrators, legal representatives, successors and assigns.

**Section 28. Recitals**.

The recitals to this Agreement are incorporated herein.

**Section 29**. **Audits and Records**.

Professional agrees that during the term hereof the City and its representatives may, during normal business hours and as often as deemed necessary, inspect, audit, examine and reproduce any and all of Professional's records relating to the services provided pursuant to this Agreement for a period of one year following the date of completion of services as determined by the City or date of termination if sooner.

**Section 30**. **Conflicts of Interests**.

Professional represents that no official or employee of the City has any direct or indirect pecuniary interest in this Agreement.

**Section 31**. **Hazardous Materials**.

Professional shall report the presence and location of any hazardous materials it notices or which an engineer of similar skill and experience should have noticed to the City.

**Section 32**. **No Boycott Israel and/or No Industry Discrimination**.

Pursuant to Texas Government Code Chapter 2270, the Professional's execution of this Agreement shall serve as verification that the Organization does not presently boycott Israel and will not boycott Israel during the term of this Agreement. Pursuant to Texas Government Code Chapter 2251, the Professional's execution of this Agreement shall serve as verification that the Organization does not current discriminate against firearm and ammunition industries and will not for the term of the contract. Discriminating means refusing to deal with, terminating business activities with, or otherwise taking any action that is intended to penalize, inflict economic harm on, or limit commercial relations specifically with the firearm or ammunition industry or with a person or entity doing business in the firearm or ammunition industry, but does not include an action made for ordinary business purposes.

(*Signature page follows*)

IN WITNESS WHEREOF, the Parties have executed and delivered this Agreement as of the date of last execution hereof.

**FOR CITY:**

**Town of Addison, Texas**

By:_____

Wesley S. Pierson, City Manager

Date: _____

ATTEST:

By:_____

Irma Parker, City Secretary

**FOR PROFESSIONAL**

**Icon Consulting Engineers, Inc.**

By:_____

Name: Clayton T. Redinger, Vice President

Date: 12/8/21

**EXHIBIT "A"**
**SCOPE OF SERVICES**

**PROFESSIONAL SERVICES AGREEMENT**
between the Town of Addison, Texas (City)
and Icon Consulting Engineers, Inc. (Consultant)
for
**Vitruvian Park Phase 9, Block 701**
to serve
**Vitruvian Townhomes**

---

## Summary of Project Scope

The scope of work for this project encompasses Vitruvian Park Public Infrastructure Phase 9, Block 701 to serve the proposed Vitruvian Townhomes development. The scope of work includes Sanitary Sewer and Water Improvements within the development, Streetscape Improvements along the north right-of-way of Bella Lane, the east right of way of Vitruvian Way, the south right-of-way of Spring Valley Road and Trail Improvements within the development along the eastern property line. Design services for the Vitruvian Park Phase 9, Block 701 project will include sanitary sewer line, water line, demolition, layout, grading, electrical, lighting, miscellaneous conduits, paving, landscaping and irrigation. The project will be phased into two (2) parts to facilitate the on-site private construction activities with the on-site public construction requirements. After private demolition and mass grading operations have been completed, the public sanitary sewer & water improvements will be constructed and completed. The streetscape and trail improvements will begin later after most of the on-site private building construction has taken place. This will minimize the impact to pedestrian ways around the perimeter of the Vitruvian Townhomes project during construction. With this proposal, we are proposing to provide the following specific scope of services for the public infrastructure improvements:

## I. SANITARY SEWER AND WATER IMPROVEMENTS

### 1. Sanitary Sewer & Water Plans

Icon will prepare sanitary sewer & water plans including detailed layout, stationing, drafting and specifications for all proposed public sanitary sewer & water improvements to serve the proposed Vitruvian Townhomes development in accordance with Town of Addison requirements. Three (3) new 8" sanitary sewer lines will be extended through the Townhome property and connect to the existing sanitary sewer lines located within Vitruvian Way and Bella Lane. Three (3) new 8" water lines will be looped throughout the Townhome property and connect to the existing water lines located within Vitruvian Way and Bella Lane. Icon will then provide all technical support necessary to facilitate acceptance of these plans by the Town of Addison.

**2. Sanitary Sewer Line Profiles**

Icon will prepare sanitary sewer profile plans showing detailed vertical alignment, stationing, drafting and specifications for all public sanitary sewer improvements to serve the proposed Vitruvian Townhomes development in accordance with Town of Addison requirements. Icon will plot all crossing utilities and design required vertical clearances from the proposed sanitary sewer lines. Icon will then provide all technical support necessary to facilitate acceptance of these plans by the Town of Addison.

**3. Water Line Profiles**

Icon will prepare sanitary sewer profile plans showing detailed vertical alignment, stationing, drafting and specifications for all public sanitary sewer improvements to serve the proposed Vitruvian Townhomes development in accordance with Town of Addison requirements. Icon will plot all crossing utilities and design required vertical clearances from the proposed water lines. Icon will then provide all technical support necessary to facilitate acceptance of these plans by the Town of Addison.

**4. Erosion & Sediment Control Plans**

Icon will prepare Erosion & Sediment Control Plans in compliance with the Texas Pollutant Discharge Elimination System (TPDES) program administered by the Texas Commission on Environmental Quality (TCEQ). The plans will include erosion and sediment control measures to be used during the construction of the sanitary sewer & water lines portion of the project.

**5. Project Meetings**

During the planning and design phases, Icon will attend project meetings with the Town of Addison and/or other project design team members.

**6. Design Support Construction Phase Services**

After the design phase has been completed and accepted by the Town, Icon will provide design support for the construction phase of the sanitary sewer & water public improvements. Icon will provide the following construction phase services:

**A.** Prepare project manual, specifications and contract documents for proposed sanitary sewer & water public infrastructure improvements.

**B.** Prepare bid quantities and proposal forms for proposed sanitary sewer & water public infrastructure improvements.

**C.** Prepare and issue addenda as appropriate to clarify, correct or change the bidding documents.

**D.** Attend the pre-bid meeting for public water and sanitary sewer infrastructure improvements.

**E.** Respond to contractor questions during the bidding process.

**F.** Prepare a tabulation of bids for the project and verify bid amounts. Evaluate the lowest and second lowest bidder, including obtaining information on past work history and physical resources.

**G.** Prepare a recommendation for the award of contract or other action and notify bidders of the action taken by the Town of Addison.

**H.** Provide assistance to the Town of Addison in the preparation of construction documents for execution by the Town of Addison and the successful contractor. Prepare 4 conformance sets and 2 original sets of the final plans and specifications.

**I.** Attend the pre-construction meeting with selected bidders. Assist in the preparation of the meeting agenda, meeting record and distribute to all attendees.

**J.** Review request for information (RFI), shop drawings, material submittals, test reports, and change orders related to the work.

**K.** Attend construction progress meetings as needed. Perform site visits, as needed, as directed by the Town of Addison.

**L.** Review and approve contractor pay applications.

**M.** When the construction of the sanitary sewer & water public improvements has been completed, perform a final review (in conjunction with Town of Addison staff) of the public infrastructure improvements and related work. Prepare "Final Work" documents as directed by the Town of Addison.

### 7. Record Drawings

Upon completion of construction, Icon will prepare record drawing electronic files in CAD and PDF formats for the Town of Addison based on marked-up plans to be provided by the contractor.

## II. STREETSCAPE AND TRAIL IMPROVEMENTS

### 1. Topographic Design Surveys

Icon will perform topographic design surveys for the planning and design of public infrastructure improvements. Surveys along Bella Lane will include the area from the existing centerline to approximately 35' north along the Vitruvian Townhomes project.

Surveys along Vitruvian Way will include the area from the existing east median curb to approximately 50' east along the Vitruvian Townhomes project. Surveys along Spring Valley Road will include the area from the existing south median curb to approximately 50' south along the Vitruvian Townhomes project. Icon will contact Texas One Call, or the appropriate utility locator companies, to field locate the existing underground utility lines along all survey areas. The location of the lines as marked will then be surveyed for design purposes. Survey information provided will include all visible features and 1' contour elevations. A map of the results of the topographic design surveys will not be prepared. The results of the surveys will be incorporated into the plan design drawings

**2. Demolition Plans**

Icon will prepare demolition plans including detailed design, drafting, specifications and locations of existing facilities to be removed or abandoned within the existing right of way along Bella Lane, Vitruvian Way and Spring Valley Road adjacent to the proposed Vitruvian Townhomes development in accordance with Town of Addison requirements.

**3. Layout and Grading Plans**

Icon will prepare layout & grading plans showing detailed design, layout, grading, paving, drafting and specifications to provide information to perform construction layout and paving of the proposed streetscape and proposed trail improvements adjacent to and within the subject property and all other miscellaneous public improvements serving the proposed Vitruvian Townhomes development in accordance with Town of Addison requirements. The plan will be prepared to include underground drainage facilities pertaining to any planting beds or tree wells.

**4. Streetscape Paving Details**

Icon will prepare streetscape paving details including detail layout, design, drafting and specifications for the proposed streetscape along Bella Lane, Vitruvian Way and Spring Valley Road adjacent to the proposed Vitruvian Townhomes development in accordance with Town of Addison requirements.

**5. Street Lighting Plans**

Icon will prepare street lighting plans for removal, relocation and modification of existing street lighting along Bella Lane and Vitruvian Way. The street lighting plans will include removal & demolition of existing facilities, installation of new light pole foundations, electrical wiring re-configurations detailed design, drafting and specifications in accordance with Town of Addison requirements.

**6. Holiday Lighting Plans**

Icon will prepare holiday lighting plans for the completion of electrical power outlets along the north side Bella Lane and the east side of Vitruvian Way adjacent to the south and

southwest portions of the proposed Vitruvian Townhomes development in accordance with Town of Addison requirements. Holiday lighting electrical power outlets are currently existing along other Bella Lane and Vitruvian Way portions which were installed during previous Vitruvian Park public infrastructure construction projects and adjacent to the previous developments. Existing electrical service and conduit provisions, installed previously, will be utilized and extended to complete the Bella Lane & Vitruvian Way portions. The holiday lighting plans will include detailed layout, design, drafting and specifications.

**7. Streetscape Landscape Plans**

Icon will prepare streetscape landscape plans including detailed design, drafting and specifications for the proposed right-of-way along Bella Lane, Vitruvian Way and Spring Valley Road adjacent to the proposed Vitruvian Townhomes development in accordance with Town of Addison requirements. Design shall be in general compliance with the Planned Development agreement for various street right-of-way sections. Drawings will be prepared to provide layout and construction details required to properly bid and install landscape planting. The plan will be prepared to include material locations, genus/species, quantity spacing, size and varieties to be utilized on site. Details and enlargements will be prepared as necessary in order to clarify intent of layout.

**8. Streetscape Irrigation Plans**

Icon will prepare streetscape irrigation plans including detailed design, drafting and specifications for the proposed right-of-way along Bella Lane, Vitruvian Way and Spring Valley Road adjacent to the proposed Vitruvian Townhomes development in accordance with Town of Addison requirements. Design shall be in general compliance with the Planned Development agreement for various street right-of-way sections. Drawings will be prepared to provide layout and construction details required to properly bid and install the irrigation system. The plan will be prepared to include location and model of all heads, valves, meters, controller electrical service, wiring, etc. as well as size of all piping and sleeving. Details and enlargements will be prepared as necessary in order to clarify intent of layout.

**9. Erosion & Sediment Control Plans**

Icon will prepare Erosion & Sediment Control Plans in compliance with the Texas Pollutant Discharge Elimination System (TPDES) program administered by the Texas Commission on Environmental Quality (TCEQ). The plans will include erosion and sediment control measures to be used during the construction of streetscape & trail portions of the project.

**10. Project Meetings**

During the planning and design phases, Icon will attend project meetings with the Town of Addison and/or other project design team members.

## 11. Design Support Construction Phase Services

After the design phase has been completed and accepted by the Town, Icon will provide design support for the construction phase of the streetscape & trail public improvements. Icon will provide the following construction phase services:

**A.** Prepare project manual, specifications and contract documents for proposed streetscape & trail public infrastructure improvements.

**B.** Prepare bid quantities and proposal forms for proposed streetscape & trail public infrastructure improvements.

**C.** Prepare and issue addenda as appropriate to clarify, correct or change the bidding documents.

**D.** Attend the pre-bid meeting for public streetscape & trail infrastructure improvements.

**E.** Respond to contractor questions during the bidding process.

**F.** Prepare a tabulation of bids for the project and verify bid amounts. Evaluate the lowest and second lowest bidder, including obtaining information on past work history and physical resources.

**G.** Prepare a recommendation for the award of contract or other action and notify bidders of the action taken by the Town of Addison.

**H.** Provide assistance to the Town of Addison in the preparation of construction documents for execution by the Town of Addison and the successful contractor. Prepare 4 conformance sets and 2 original sets of the final plans and specifications.

**I.** Attend the pre-construction meeting with selected bidders. Assist in the preparation of the meeting agenda, meeting record and distribute to all attendees.

**J.** Review request for information (RFI), shop drawings, material submittals, test reports, and change orders related to the work.

**K.** Attend construction progress meetings as needed. Perform site visits, as needed, as directed by the Town of Addison.

**L.** Review and approve contractor pay applications.

**M.** When the construction of the streetscape & trail public improvements has been completed, perform a final review (in conjunction with Town of Addison staff) of the public infrastructure improvements and related work. Prepare "Final Work" documents as directed by the Town of Addison.

## 12. Record Drawings

Upon completion of construction, Icon will prepare record drawing electronic files in CAD and PDF formats for the Town of Addison based on marked-up plans to be provided by the contractor.

**PROFESSIONAL SERVICES AGREEMENT**
between the Town of Addison, Texas (City)
and Icon Consulting Engineers, Inc. (Consultant)
for
**Vitruvian Park Phase 9, Block 701**
to serve
**Vitruvian Townhomes**

---

## COMPENSATION SCHEDULE / PROJECT BILLING SUMMARY

Icon Consulting Engineers, Inc. proposes to provide the Scope of Services as described above on a "not-to-exceed" fee basis as follows:

### I. SANITARY SEWER AND WATER IMPROVEMENTS

1. **Sanitary Sewer & Water Plans -** Icon will perform the services as described for a not-to-exceed fee of **$16,000**.

2. **Sanitary Sewer Line Profiles -** Icon will perform the services as described for a not-to-exceed fee of **$3,840**.

3. **Water Line Profiles -** Icon will perform the services as described for a not-to-exceed fee of **$5,760**.

4. **Erosion & Sediment Control Plans -** Icon will perform the services as described for a not-to-exceed fee of **$1,248**.

5. **Project Meetings -** Icon will perform the services as described for a not-to-exceed fee of **$2,560**.

6. **Design Support Construction Phase Services -** Icon will perform the services as described for a not-to-exceed fee of **$11,956**.

7. **Record Drawings -** Icon will perform the services as described for a not-to-exceed fee of **$1,536**.

8. **Reimbursable Expenses -** As needed for a not-to-exceed fee of **$1,000**.

**TOTAL NOT-TO-EXCEED FEE FOR TASKS 1 THROUGH 8 = $43,900.**

## II. STREETSCAPE AND TRAIL IMPROVEMENTS

1. **Topographic Design Surveys -** Icon will perform the services as described for a not-to-exceed fee of **$3,960**.

2. **Demolition Plans -** Icon will perform the services as described for a not-to-exceed fee of **$2,496**.

3. **Layout and Grading Plans -** Icon will perform the services as described for a not-to-exceed fee of **$15,040**.

4. **Streetscape Paving Details -** Icon will perform the services as described for a not-to-exceed fee of **$4,160**.

5. **Street Lighting Plans -** Icon will perform the services as described for a not-to-exceed fee of **$2,080**.

6. **Holiday Lighting Plans -** Icon will perform the services as described for a not-to-exceed fee of **$2,080**.

7. **Streetscape Landscape Plans -** Icon will perform the services as described for a not-to-exceed fee of **$5,655**.

8. **Streetscape Irrigation Plans -** Icon will perform the services as described for a not-to-exceed fee of **$3,045**.

9. **Erosion & Sediment Control Plans -** Icon will perform the services as described for a not-to-exceed fee of **$1,664**.

10. **Project Meetings -** Icon will perform the services as described for a not-to-exceed fee of **$2,560**.

11. **Design Support Construction Phase Services -** Icon will perform the services as described for a not-to-exceed fee of **$14,804**.

12. **Record Drawings -** Icon will perform the services as described for a not-to-exceed fee of **$1,536**.

13. **Reimbursable Expenses -** As needed for a not-to-exceed fee of **$1000**.

**TOTAL NOT-TO-EXCEED FEE FOR TASKS 1 THROUGH 13 = $60,080.**

**TOTAL NOT-TO-EXCEED FEE SUMMARY**

| | | |
|---|---|---|
| **Sanitary Sewer and Water Improvements** | **=** | **$ 43,900** |
| **Streetscape and Trail Improvements** | **=** | **$ 60,080** |
| **TOTAL NOT-TO-EXCEED FEE** | **=** | **$103,980** |

## III. ADDITIONAL SERVICES

**1.** Compensation for Additional Services authorized by the Town shall be in addition to the Consultant's Fee and shall be based on an hourly basis according to the following personnel rates. The rates set forth in this chart are subject to reasonable change provided prior written notice of said change is given to Town.

| | |
|---|---|
| Principal Engineer | $190.00 |
| Registered Professional Engineer | $175.00 |
| Senior Project Manager | $160.00 |
| Engineer in Training | $150.00 |
| CAD Production Manager | $150.00 |
| Engineering Technician | $120.00 |
| CAD Designer | $100.00 |
| CAD Operator | $ 80.00 |
| Administrative Assistant | $ 70.00 |

**PROFESSIONAL SERVICES AGREEMENT**
between the Town of Addison, Texas (City)
and Icon Consulting Engineers, Inc. (Consultant)
for
**Vitruvian Park Phase 9, Block 701**
to serve
**Vitruvian Townhomes**

---

## DESIGN SCHEDULE

Icon Consulting Engineers, Inc. proposes the following design schedule:

### I. SANITARY SEWER AND WATER IMPROVEMENTS

Jul. 26th, 2021 to Jan. 11th, 2022: Prepare Final Design Drawings
Jan. 12th to Jan. 28th, 2022: Submittal of Design Drawings to Town for Review.
Jan. 31st to Feb. 4th, 2022: Plan Revisions by Icon to Address Town Comments
Feb. 7th to Feb 18th, 2022: Re-submittal of Design Drawings to Town for Review.
Feb. 21st to Feb. 25th, 2022: Final Revisions by Icon to Address Town Comments
Feb. 28th to Mar. 4th, 2022: Final Review and Approval of Public Improvements

### II. STREETSCAPE AND TRAIL IMPROVEMENTS

Jul. 26th, 2021 to Jan. 11th, 2022: Prepare Final Design Drawings
Jan. 12th to Feb. 25th, 2022: Submittal of Design Drawings to Town for Review.
Feb. 28th to Mar. 11th, 2022: Plan Revisions by Icon to Address Town Comments
Mar. 14th to Apr 1st, 2022: Re-submittal of Design Drawings to Town for Review.
Apr. 4th to Apr. 15th, 2022: Final Revisions by Icon to Address Town Comments
Apr. 18th to Apr. 29th, 2022: Final Review and Approval of Public Improvements

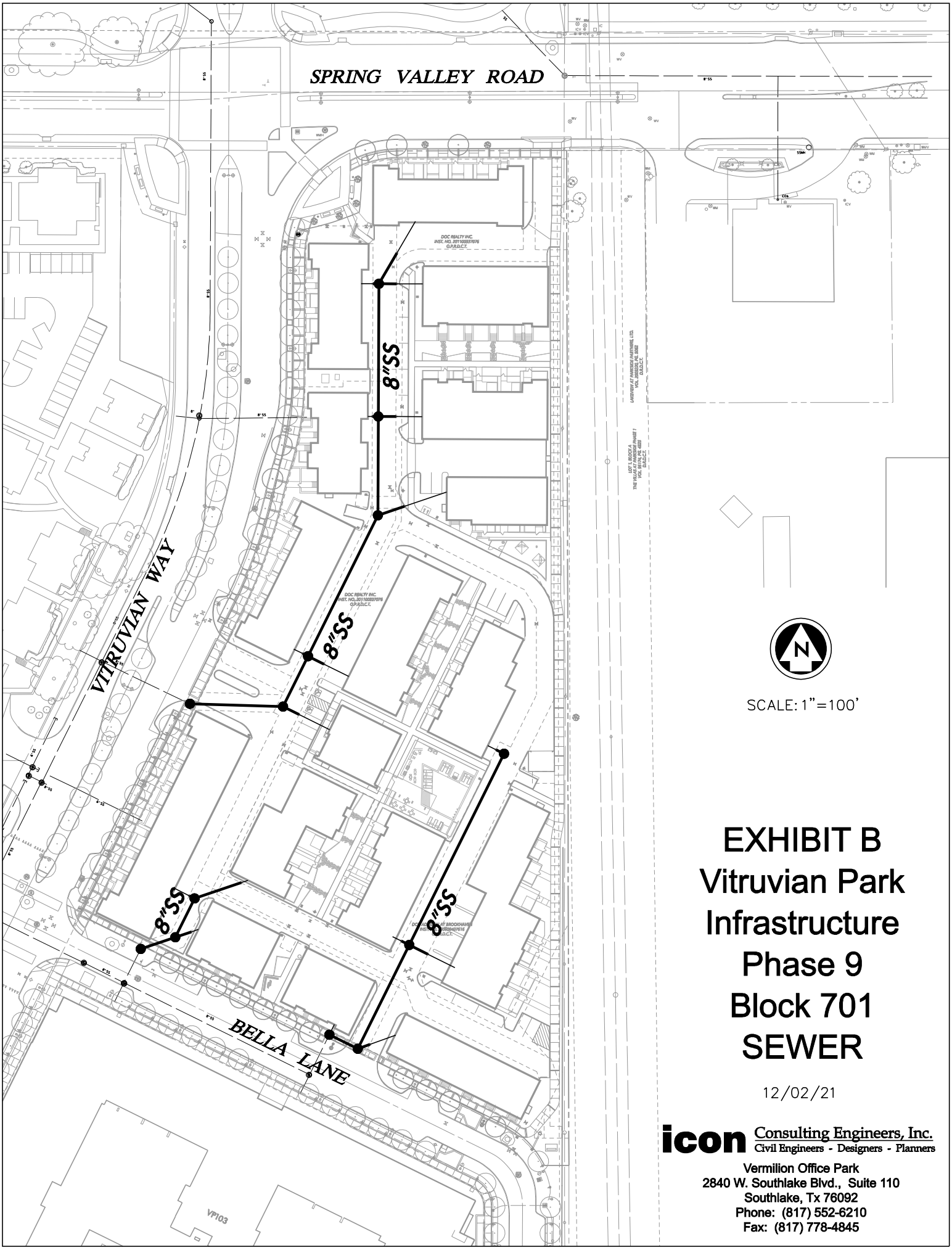


SCALE: 1"=100'

# EXHIBIT B
# Vitruvian Park
# Infrastructure
# Phase 9
# Block 701
# SEWER

12/02/21

icon Consulting Engineers, Inc.
Civil Engineers - Designers - Planners
Vermilion Office Park
2840 W. Southlake Blvd., Suite 110
Southlake, Tx 76092
Phone: (817) 552-6210
Fax: (817) 778-4845

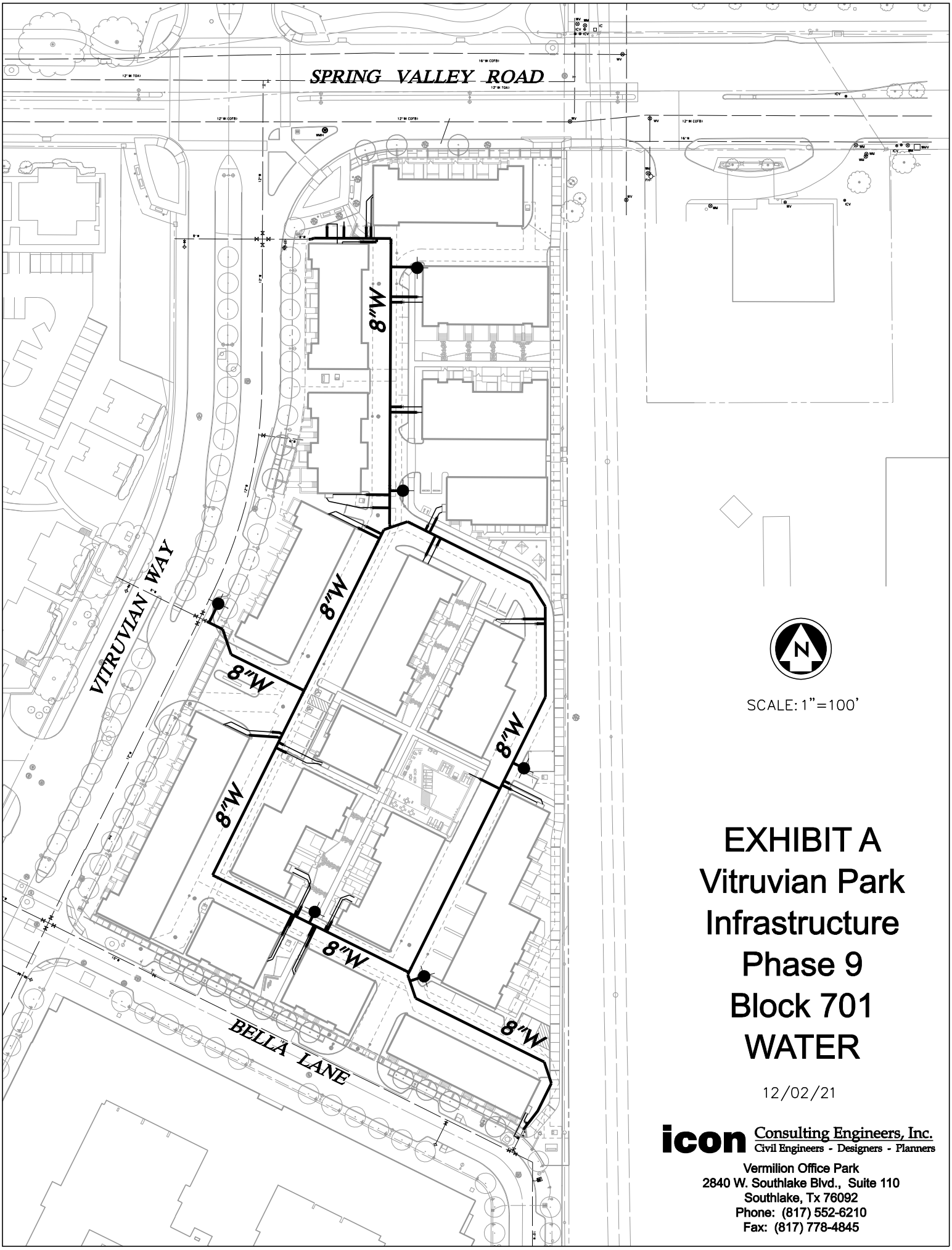


SCALE: 1"=100'

# EXHIBIT A
# Vitruvian Park Infrastructure Phase 9 Block 701 WATER

12/02/21

icon Consulting Engineers, Inc.
Civil Engineers - Designers - Planners
Vermilion Office Park
2840 W. Southlake Blvd., Suite 110
Southlake, Tx 76092
Phone: (817) 552-6210
Fax: (817) 778-4845

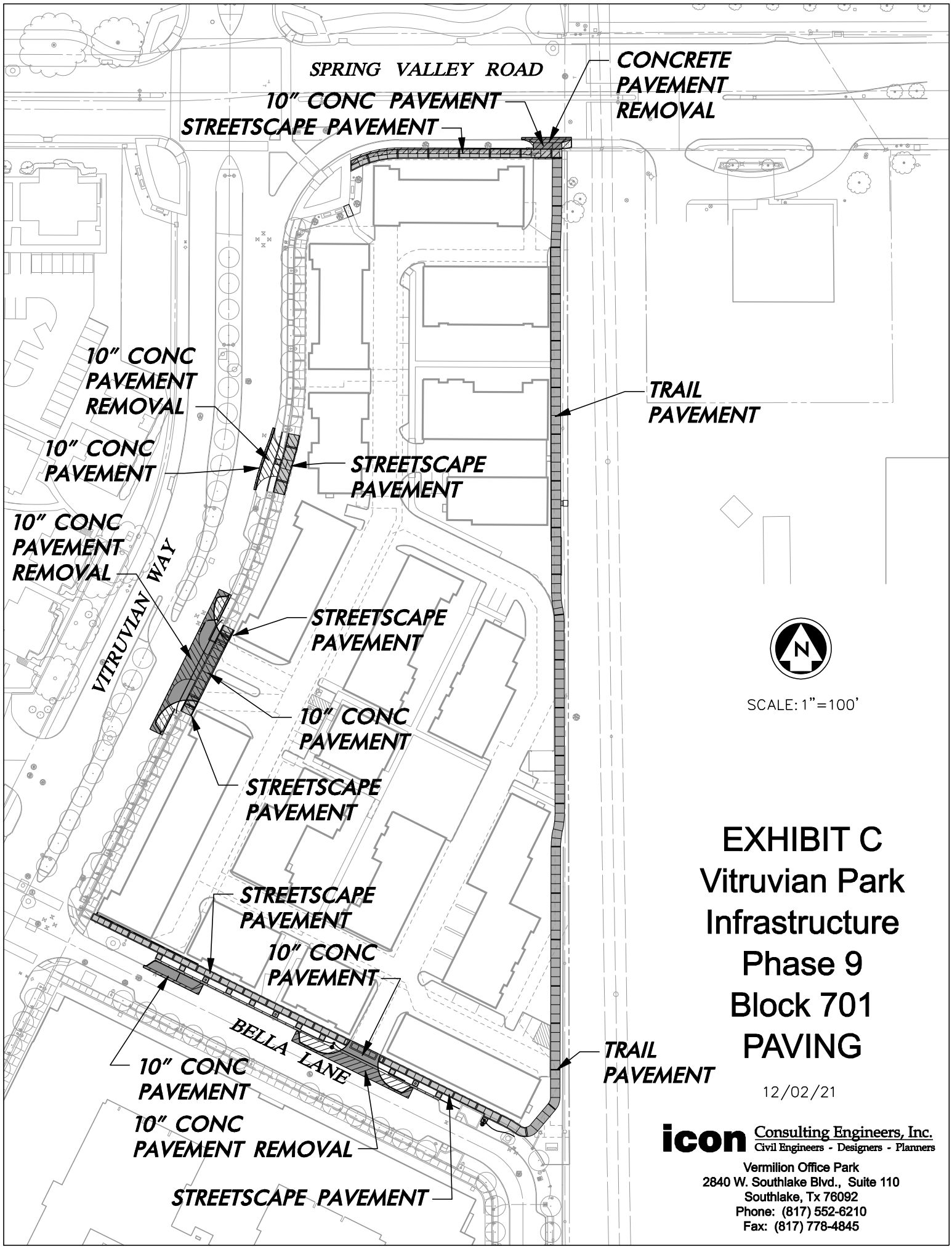


# EXHIBIT C
# Vitruvian Park Infrastructure Phase 9 Block 701 PAVING

12/02/21


icon Consulting Engineers, Inc.
Civil Engineers - Designers - Planners

Vermilion Office Park
2840 W. Southlake Blvd., Suite 110
Southlake, Tx 76092
Phone: (817) 552-6210
Fax: (817) 778-4845




SCALE: 1"=250'


**icon** Consulting Engineers, Inc.
Civil Engineers - Designers - Planners
Bicentennial Financial Center
250 W. Southlake Blvd., Suite 117
Southlake, Tx 76092
Phone: (817) 552-6210
Fax: (817) 778-4845


## Infrastructure Improvements

| | |
|---|---|
| Phase 3 | $ 1,100,226 |
| Phase 4 | $ 1,775,577 |
| Phase 5 | $ 4,780,852 |
| Phase 6 | $ 4,446,496 |
| Phase 7 | $ 4,255,411 |
| Phase 8 | $ 7,605,149 |
| Phase 9 | $ 2,625,618 |
| **TOTAL FUNDING** | **$26,589,329** |

Phase 3 - Vitruvian Park Restroom, Streetscape, Streetscape Electrical & Northeast Screen Wall for Block 103 and Farmers Branch Creek Imprvmts

Phase 4 - Alpha Road Connection through Brookhaven College

Phase 5 - Paving, Drainage & Utility Improvements for Development Block 2

Phase 6 - Paving, Drainage & Utility Improvements for Development Block 3

Phase 7 - Paving, Drainage & Utility Improvements for Development Blocks 4

Phase 8 - Paving, Drainage & Utility Improvements for Development Block 5 and Park Extension

Phase 9 - Paving, Drainage & Utility Improvements for Development Blocks 6 & 7

* $ 6,589,329 allocated in Funding No. 2 is subject to future Council authorization

Vitruvian Park Public Infrastructure Phase 9, Block 707

# EXHIBIT "C–2"
# FUNDING NO. 2
# Sheet 1 of 2

06/19/13

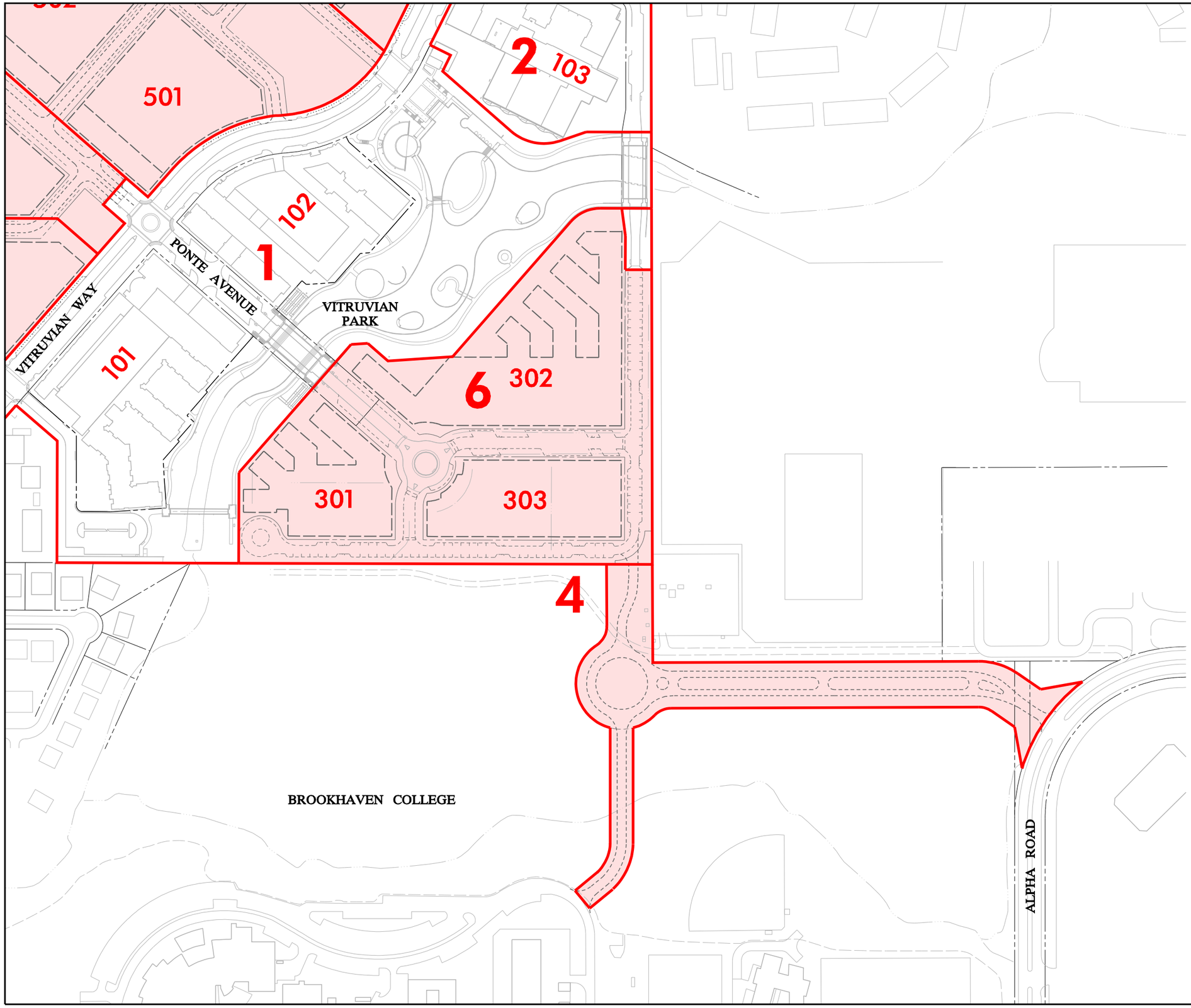


SCALE: 1"=250'

icon Consulting Engineers, Inc.
Civil Engineers - Designers - Planners
Bicentennial Financial Center
250 W. Southlake Blvd., Suite 117
Southlake, Tx 76092
Phone: (817) 552-6210
Fax: (817) 778-4845

# EXHIBIT "C–2"
# FUNDING NO. 2
## Sheet 2 of 2

06/19/13

## VITRUVIAN PARK INFRASTRUCTURE - PHASE 9, BLOCK 701
### Vitruvian Park Townhomes
**Date: December 02, 2021**

## ENGINEER'S OPINION OF PROJECT COST

| ITEM | PROJECT PHASE | % | AMOUNT | SUB-TOTAL |
|---|---|---|---|---|
| **I** | **DEMOLITION** | | | |
| | Construction Cost | | | $ 69,894.50 |
| | Contingencies | 5 | $ 3,494.73 | $ 73,389.23 |
| | Engineering Design | 12 | $ 8,387.34 | $ 81,776.57 |
| | Testing & Management | 12 | $ 8,387.34 | $ 90,163.91 |
| | **Phase Cost: DEMOLITION** | | | **$ 90,163.91** |
| **II** | **SANITARY SEWER** | | | |
| | Construction Cost | | | $ 182,635.00 |
| | Contingencies | 5 | $ 9,131.75 | $ 191,766.75 |
| | Engineering Design | 12 | $ 21,916.20 | $ 213,682.95 |
| | Testing & Management | 12 | $ 21,916.20 | $ 235,599.15 |
| | **Phase Cost: SANITARY SEWER** | | | **$ 235,599.15** |
| **III** | **WATER** | | | |
| | Construction Cost | | | $ 284,204.00 |
| | Contingencies | 5 | $ 14,210.20 | $ 298,414.20 |
| | Engineering Design | 12 | $ 34,104.48 | $ 332,518.68 |
| | Testing & Management | 12 | $ 34,104.48 | $ 366,623.16 |
| | **Phase Cost: WATER** | | | **$ 366,623.16** |
| **IV** | **STREET LIGHTING** | | | |
| | Construction Cost | | | $ 19,774.25 |
| | Contingencies | 5 | $ 988.71 | $ 20,762.96 |
| | Engineering Design | 12 | $ 2,372.91 | $ 23,135.87 |
| | Testing & Management | 12 | $ 2,372.91 | $ 25,508.78 |
| | **Phase Cost: STREET LIGHTING** | | | **$ 25,508.78** |
| **V** | **HOLIDAY LIGHTING** | | | |
| | Construction Cost | | | $ 98,130.00 |
| | Contingencies | 5 | $ 4,906.50 | $ 103,036.50 |
| | Engineering Design | 12 | $ 11,775.60 | $ 114,812.10 |
| | Testing & Management | 12 | $ 11,775.60 | $ 126,587.70 |
| | **Phase Cost: HOLIDAY LIGHTING** | | | **$ 126,587.70** |
| **VI** | **PAVING** | | | |
| | Construction Cost | | | $ 289,280.00 |
| | Contingencies | 5 | $ 14,464.00 | $ 303,744.00 |
| | Engineering Design | 12 | $ 34,713.60 | $ 338,457.60 |
| | Testing & Management | 12 | $ 34,713.60 | $ 373,171.20 |
| | **Phase Cost: PAVING** | | | **$ 373,171.20** |
| **VII** | **LANDSCAPE** | | | |
| | Construction Cost | | | $ 90,922.75 |
| | Contingencies | 5 | $ 4,546.14 | $ 95,468.89 |
| | Engineering Design | 12 | $ 10,910.73 | $ 106,379.62 |
| | Testing & Management | 12 | $ 10,910.73 | $ 117,290.35 |
| | **Phase Cost: LANDSCAPE** | | | **$ 117,290.35** |
| | | | | |
| | **TOTAL PROJECT COST: VITRUVIAN PARK INFRASTRUCTURE - Phase 9, Block 701** | | | **$ 1,334,944.25** |

**Council Meeting** **9.**

**Meeting Date:** 01/11/2022

**Department:** General Services

**Pillars:** Excellence in Asset Management

**Milestones:** Implement the Asset Management Plan in accordance with the Asset Management Policy, utilizing information systems

---

**AGENDA CAPTION:**

Consider Action on a **Resolution Approving a Professional Engineering and Design Services Agreement Between the Town of Addison and MPI Architects for Phase II of the Facilities Utilization Study and Authorizing the City Manager to Execute the Agreement** in an Amount Not to Exceed $122,500.

**BACKGROUND:**

Town staff worked with the LPA architecture firm to conduct Phase 1 of a facility study that evaluated Town facilities including the Conference and Theatre Center, Finance building, Central Fire Station, Fire Station 2, Police and Courts building , Service Center, and Town Hall. The findings were presented at the City Council meeting on April 14, 2020.

At that presentation, Council asked that staff continue the study in a second phase and consider the following:

- Financial Analysis
  - What is the tipping point of building new versus modernizing facilities?
  - What is the most economical plan over the next 40-50 years?
  - How does this fit into the Transit Oriented Development plans?
- Develop a strategy for each facility.
- Explore the Public-Private Partnership (P3) option for funding.

To conduct Phase II, staff had to identify a new vendor because an acceptable scope of work and price could not be negotiated with LPA. Staff identified MPI Architects (MPI). MPI is an Addison business with a long history of working with the Town on facility related projects including facility studies. MPI was asked to present a proposal that capitalized on data collected in Phase 1 and provide a financial analysis and strategy for three concepts:

1. The Town remaining in existing facilities and reorganizing the departments with facility updates to meet current needs.
2. Expand existing facilities to meet current and future needs.
3. Rough square footage requirements for a new City Center to bring several

departments and functions into a more traditional City Hall facility.

This second phase will also include:

1. How the Town will address staff and visitor safety in facilities from viruses such as Covid-19.
2. Aspects of the Addison TreeHouse where Economic Development and Tourism is currently located.

Staff will explore the P3 options separately from this study.

Phase II is included in the Fiscal Year 2021-2022 budget for $125,000. The project is under budget.

Phase II is expected to take six months to complete. Once completed, MPI will present the findings to the City Council for consideration.

**RECOMMENDATION:**

Administration recommends approval.

---

**Attachments**

Resolution - MPI Phase II Facilities Utilization Study

---

**RESOLUTION NO. _____**

**A RESOLUTION OF THE CITY COUNCIL OF THE TOWN OF ADDISON, TEXAS APPROVING AN AGREEMENT WITH MPI ARCHITECTS FOR PROFESSIONAL ENGINEERING AND DESIGN SERVICES FOR THE TOWN OF ADDISON PHASE II FACILITIES UTILIZATION STUDY; AUTHORIZING THE CITY MANAGER TO EXECUTE THE AGREEMENT; AND PROVIDING ANEFFECTIVE DATE.**

**WHEREAS,** the City Council desires to authorize an agreement with MPI Architects to provide professional engineering and design services for the Town of Addison Phase II Facilities Utilization Study (the "Agreement").

**NOW, THEREFORE, BE IT RESOLVED BY THE CITY COUNCIL OF THE TOWN OF ADDISON, TEXAS:**

**SECTION 1**. The City Council hereby approves the Agreement between the Town of Addison and MPI Architects in an amount not-to-exceed of $122,500.00 for professional engineering and design services for the Town of Addison Phase II Facilities Utilization Study, a copy of which is attached to this Resolution as **Exhibit A**. The City Manager is hereby authorized to execute the Agreement.

**SECTION 2.** This Resolution shall take effect from and after its date of adoption.

**DULY RESOLVED AND ADOPTED** by the City Council of the Town of Addison, Texas, on this the **11th** day of ***JANUARY 2022*.**

**TOWN OF ADDISON, TEXAS**

_____
Joe Chow, Mayor

**ATTEST:**

_____
Irma Parker, City Secretary

**PROFESSIONAL SERVICES AGREEMENT**
Town of Addison Phase II Facilities Utilization Study

This Professional Services Agreement ("Agreement") is made by and between the **Town of Addison, Texas** ("City"), and **MPI Architects** (**"**Professional") (each a "party" and collectively the "parties"), acting by and through their respective authorized representatives.

**RECITALS**

**WHEREAS**, City desires Professional to perform certain work and services set forth in Section 1, Scope of Services and

**WHEREAS**, Professional has expressed a willingness to perform said work and services, hereinafter referred to only as "services", specified in said Scope of Services, and enumerated under Section 1, of this Agreement;

**NOW, THEREFORE**, for and in consideration of the covenants and promises made one to the other herein, City and Professional agree as follows:

**Section 1. Scope of Services**

Upon issuance of a written notice to proceed by City, Professional agrees to provide to City the professional services for the Town of Addison Phase II Facilities Utilization Study ("Project"), as set forth in the Scope of Services attached hereto as Exhibit "A" and incorporated herein by reference (the "Scope of Services").

**Section 2. Term of Agreement**

The term of this Agreement shall begin on the last date of execution hereof (the "Effective Date") and shall continue until Professional completes the services required herein to the satisfaction of City, unless sooner terminated as provided in Section 8, below.

**Section 3. Professional Obligations**

A. Professional shall devote such time as reasonably necessary for the satisfactory performance of the work under this Agreement. Should City require additional services not included under this Agreement, Professional shall make reasonable effort to provide such additional services in accordance with the fee schedule set forth in Exhibit "A", attached hereto and incorporated herein by reference, and within the time schedule prescribed by City; and without decreasing the effectiveness of the performance of services required under this Agreement.

B. To the extent reasonably necessary for Professional to perform the services under this Agreement, Professional shall be authorized to engage the services of any agents, assistants, persons, or corporations that Professional may deem proper to aid or assist in the performance of the services under this Agreement with the prior written approval of City. The cost of such

personnel and assistance shall be a reimbursable expense to Professional only if authorized in writing in advance by City.

C. Professional shall furnish and pay for all labor, tools, materials, equipment, supplies, transportation and management necessary to perform all services set forth in the Scope of Services.

**Section 4. Payment**

A. City agrees to pay Professional for all services authorized in writing and properly performed by Professional in accordance with the fee schedule set forth in Exhibit "A," attached hereto and incorporated herein by reference, subject to additions or deletions for changes or extras agreed upon in writing. All payments to Professional by City shall be based on detailed monthly invoices submitted by Professional for work performed and accepted by City, less any previous payments. Payment will be due within 30 days of the City's receipt of an approved invoice.

B. City reserves the right to delay, without penalty, any payment to Professional when, in the opinion of City, Professional has not made satisfactory progress on the Project as described in the Scope of Services.

C. The total compensation to Professional shall be as specified in payment schedule set forth in Exhibit "A", which shall not exceed ONE HUNDRED AND TWENTY-TWO THOUSAND FIVE HUNDRED DOLLARS AND No/100 ($122,500.00). City may deduct from any amounts due or to become due to Professional any sum or sums owing by Professional to City. In the event of any breach by Professional of any provision or obligation of this Agreement, or in the event of the assertion by other parties of any claim or lien against City, or City's premises, arising out of Professional's performance of this Agreement, City shall have the right to retain out of any payments due or to become due to Professional an amount sufficient to completely protect City from any and all loss, damage or expense therefrom, until the breach, claim or lien has been satisfactorily remedied or adjusted by Professional.

**Section 5. Responsibilities**

A. Professional shall be responsible for the professional quality, technical accuracy, and the coordination of all designs, drawings, specifications, plans and other services furnished by Professional under this Agreement. Professional shall, without additional compensation, correct or revise any errors or deficiencies in the design, drawings, specifications, plans and other services.

B. Neither City's review, approval/acceptance of, nor payment for any of the services required under this Agreement, shall be construed to operate as a waiver of any rights under this Agreement or of any cause of action arising out of the performance of this Agreement, and Professional shall be and remain liable to City in accordance with applicable law for all damages to City caused by Professional's negligent performance of any of the services furnished under this Agreement.

C. The rights and remedies of City under this Agreement are as provided by law.

**Section 6. Time for Performance**

A. Professional shall perform all services as provided for under this Agreement in a proper, efficient, timely, and professional manner in accordance with City's requirements. Notwithstanding the foregoing, the parties agree that the services identified in the Scope of Services shall be completed by Professional within six (6) months of the City's issuance of a written notice to proceed to Professional.

B. In the event Professional's performance of this Agreement is delayed or interfered with by acts of the City or others, Professional may request an extension of time for the performance of same as hereinafter provided but shall not be entitled to any increase in fee or price, or to damages or additional compensation as a consequence of such delays.

C. No allowance of any extension of time, for any cause whatever, shall be claimed or made to Professional, unless Professional shall have made written request upon City for such extension within forty-eight (48) hours after the cause for such extension occurred, and unless City and Professional have agreed in writing upon the allowance of additional time to be made.

**Section 7. Documents**

A. All surveys, studies, proposals, applications, drawings, plans, specifications and other documents, including those in electronic form, prepared by Professional and its consultants, subcontractors, agents, representatives, and/or employees in connection with this Agreement ("Project Documents") are intended for the use and benefit of City. Professional and its consultants, subcontractors, agents, representatives, and/or employees shall be deemed the authors of their respective part of the Project Documents. Notwithstanding, upon payment by City as required by this Agreement, City shall own, have, keep and retain all rights, title and interest in and to all Project Documents, including all ownership, common law, statutory, and other reserved rights, including copyrights (except copyrights held by the Professional) in and to all Project Documents, whether in draft form or final form, which are produced at City's request and in furtherance of this Agreement. City shall have full authority to authorize contractor(s), subcontractors, sub-subcontractors, City consultants, and material or equipment suppliers to reproduce applicable portions of the Project Documents to and for use in their execution of the work or for any other purpose. All materials and reports prepared by Professional in connection with this Agreement are "works for hire" and shall be the property of City upon payment of Professional as provided in this Agreement. City shall have the right to publish, disclose, distribute and otherwise use Project Documents in accordance with the Engineering Practice Act of the State of Texas (Texas Occupation Code, Chapter 1001, as amended) and/or Texas Occupations Code, Chapter 1051, as amended. Professional shall, upon completion of the services and full payment for Professional's services by the City, or earlier termination and appropriate compensation as provided by this Agreement, provide City with reproductions of all materials, reports, and exhibits prepared by Professional pursuant to this Agreement in such electronic format(s) as may be requested by the City.

B. All instruments of service (including plans, specifications, drawings, reports, designs, computations, computer programs, computer code, software, estimates, surveys, other data or work items, etc.) prepared under this Agreement shall be submitted for approval of City. All instruments of service shall be professionally sealed as may be required by law or by City.

C. Acceptance and approval of the Project Documents by City shall not constitute nor be deemed a release of the responsibility and liability of Professional, its employees, associates, agents and consultants for the accuracy or competency of their designs, working drawings and specifications, or other documents and work; nor shall such approval be deemed to be an assumption of such responsibility by City for any defect in the designs, working drawings and specifications, or other documents prepared by Professional, its employees, contractor, agents and consultants.

**Section 8. Termination**

A. City may suspend or terminate this Agreement for cause or without cause at any time by giving written notice to Professional. In the event suspension or termination is without cause, payment to Professional, in accordance with the terms of this Agreement, will be made on the basis of services reasonably determined by City to be satisfactorily performed to the date of suspension or termination. Such payment will be due upon delivery of all instruments of service to City.

B. Should City require a modification of this Agreement with Professional, and in the event City and Professional fail to agree upon a modification to this Agreement, City shall have the option of terminating this Agreement and Professional's services hereunder at no additional cost other than the payment to Professional, in accordance with the terms of this Agreement, for the services reasonably determined by City to be properly performed by Professional prior to such termination date.

C. Termination for Force Majeure. To the extent either party of this agreement shall be wholly or partially prevented from the performance of the term specified, or of any obligation or duty placed on such party by reason of or through work strikes, stoppage of labor, riot, fire, flood, acts of war, insurrection, court judgment, act of God, or other specific cause reasonably beyond the parties control and not attributable to its malfeasance, neglect or nonfeasance. In such event, the time for performance of such obligation or duty shall be suspended until such disability to perform is removed. In the event of any such disability, the time for performance of such obligations (other than a payment obligation) shall be extended for a period equal to the time lost by reason of the disability. A party claiming the benefit of this provision shall, as soon as reasonably practicable after the occurrence of any such event, (a) provide written notice to the other party of the nature and extent of any such Force Majeure condition; and (b) use commercially reasonable efforts to remove any such causes and resume performance under this Agreement as soon as reasonably practicable.

**Section 9.** **Insurance**

A. Professional shall during the term hereof maintain in full force and effect the following insurance:

(i) A commercial general liability policy of insurance for bodily injury, death and property damage insuring against all claims, demands or actions relating to the Professional's performance of services pursuant to this Agreement with a minimum combined single limit of not less than $1,000,000.00 per occurrence ($2,000,000.00 aggregate) for injury to persons (including death), and for property damage;

(ii) An automobile liability insurance policy covering any vehicles owned and/or operated by Professional, its officers, agents, and employees, and used in the performance of this Agreement with policy limits of not less than $1,000,000.00 combined single limit and aggregate for bodily injury and property damage;

(iii) Statutory Worker's Compensation Insurance at the statutory limits and Employers' Liability covering all of Professional's employees involved in the provision of services under this Agreement with policy limit of not less than $1,000,000.00; and

(iv) Professional Liability covering negligent acts, errors and omissions in the performance of professional services with policy limit of not less than $1,000,000.00 per claim and $1,000,000.00 in the aggregate.

B. All insurance and certificate(s) of insurance shall contain the following provisions:

(i) Name the City, its officers, and employees as additional insureds as to all applicable coverage (not including the Workers Compensation Insurance and Professional Liability);

(ii) Provide for at least thirty (30) days prior written notice to the City for cancellation or non-renewal of the insurance or reduction in coverage limits; and

(iii) Provide for a waiver of subrogation against the City for injuries, including death, property damage, or any other loss to the extent the same is covered by the proceeds of insurance (not including the Professional Liability Insurance).

C. All insurance companies providing the required insurance shall be authorized to transact business in Texas and rated at least "A" by AM Best or other equivalent rating service.

D. A certificate of insurance evidencing the required insurance and all endorsements shall be delivered to City prior to commencement of services.

**Section 12. Indemnification.**

**CITY SHALL NOT BE LIABLE FOR ANY LOSS, DAMAGE, OR INJURY OF ANY KIND OR CHARACTER TO ANY PERSON OR PROPERTY ARISING FROM THE SERVICES OF PROFESSIONAL PURSUANT TO THIS AGREEMENT. PROFESSIONAL HEREBY WAIVES ALL CLAIMS AGAINST CITY, ITS OFFICERS, AGENTS AND EMPLOYEES (COLLECTIVELY REFERRED TO IN THIS SECTION AS "CITY INDEMNITEES") FOR DAMAGE TO ANY PROPERTY OR INJURY TO, OR DEATH OF, ANY PERSON ARISING AT ANY TIME AND FROM ANY CAUSE OTHER THAN THE GROSS NEGLIGENCE OR WILLFUL MISCONDUCT OF THE CITY INDEMNITEES. PROFESSIONAL AGREES TO INDEMNIFY AND SAVE HARMLESS THE CITY INDEMNITEES FROM AND AGAINST ANY AND ALL LIABILITIES, DAMAGES, CLAIMS, SUITS, COSTS (INCLUDING COURT COSTS, REASONABLE ATTORNEYS' FEES AND COSTS OF INVESTIGATION) AND ACTIONS OF ANY KIND BY REASON OF INJURY TO OR DEATH OF ANY PERSON OR DAMAGE TO OR LOSS OF PROPERTY TO THE EXTENT CAUSED BY THE NEGLIGENT PERFORMANCE OF SERVICES UNDER THIS AGREEMENT OR BY REASON OF ANY NEGLIGENT ACT OR OMISSION ON THE PART OF PROFESSIONAL, ITS OFFICERS, DIRECTORS, SERVANTS, EMPLOYEES, REPRESENTATIVES, CONSULTANTS, LICENSEES, SUCCESSORS OR PERMITTED ASSIGNS (EXCEPT WHEN SUCH LIABILITY, CLAIMS, SUITS, COSTS, INJURIES, DEATHS OR DAMAGES ARISE FROM OR ARE ATTRIBUTED TO NEGLIGENCE OF A CITY INDEMNITEE, IN WHOLE OR IN PART, IN WHICH CASE PROFESSIONAL SHALL INDEMNIFY THE CITY INDEMNITEE ONLY TO THE EXTENT OR PROPORTION OF NEGLIGENCE ATTRIBUTED TO PROFESSIONAL, ITS OFFICERS, AGENTS, OR EMPLOYEES AS DETERMINED BY A COURT OR OTHER FORUM OF COMPETENT JURISDICTION). PROFESSIONAL'S OBLIGATIONS UNDER THIS SECTION SHALL NOT BE LIMITED TO THE LIMITS OF COVERAGE OF INSURANCE MAINTAINED OR REQUIRED TO BE MAINTAINED BY PROFESSIONAL UNDER THIS AGREEMENT. THIS PROVISION SHALL SURVIVE THE TERMINATION OF THIS AGREEMENT.**

**Section 13. Assignment**

Professional shall not assign or sublet this Agreement, or any part thereof, without the prior written consent of City.

**Section 14. Applicable Laws**

Professional shall comply with all federal, state, county and municipal laws, ordinances, regulations, safety orders, resolutions and building codes relating or applicable to services to be performed under this Agreement. The laws of the state of Texas shall govern this Agreement; and venue for any action concerning this Agreement shall be in the state district court of Dallas County, Texas. The parties agree to submit to the personal and subject matter jurisdiction of said court

**Section 15. Default of Professional**

In the event, Professional fails to comply or becomes disabled and unable to comply with the provisions of this Agreement as to the quality or character of the service or time of performance, and the failure is not corrected within ten (10) days after written notice by City to Professional, City may, at its sole discretion without prejudice to any other right or remedy:

A. Terminate this Agreement and be relieved of the payment of any further consideration to Professional except for all work determined by City to be satisfactorily completed prior to termination. Payment for work satisfactorily completed shall be for actual costs, including reasonable salaries and travel expenses of Professional to and from meetings called by City at which Professional is required to attend, but shall not include any loss of profit of Professional. In the event of such termination, City may proceed to complete the services in any manner deemed proper by City, either by the use of its own forces or by re-subletting to others.

B. City may, without terminating this Agreement or taking over the services, furnish the necessary materials, equipment, supplies and/or help necessary to remedy the situation, at the expense of Professional.

**Section 16. Adjustments in Services**

No claims for extra services, additional services or changes in the services will be made by Professional without a written agreement with City prior to the performance of such services.

**Section 17. Execution becomes Effective**

This Agreement will be effective on the date when signed by authorized representatives of Professional and City ("the Effective Date").

**Section 18. Agreement Amendments**

This Agreement contains the entire understanding of the parties with respect to the subject matter hereof and there are no oral understandings, statements or stipulations bearing upon the meaning or effect of this Agreement which have not been incorporated herein. This Agreement may only be modified, amended, supplemented or waived by a written instrument executed by the parties except as may be otherwise provided therein.

**Section 19. Severability.**

In the event any one or more of the provisions contained in this Agreement shall for any reason be held to be invalid, illegal, or unenforceable in any respect, such invalidity, illegality or unenforceability shall not affect any other provisions, and the Agreement shall be construed as if such invalid, illegal, or unenforceable provision had never been contained in it.

**Section 20. Independent Contractor.**

It is understood and agreed by and between the parties that Professional in satisfying the conditions of this Agreement, is acting independently, and that City assumes no responsibility or liabilities to any third party in connection with Professional's actions. All services to be performed by Professional pursuant to this Agreement shall be in the capacity of an independent contractor, and not as an agent or employee of City. Professional shall supervise the performance of its services and shall be entitled to control the manner and means by which its services are to be performed, subject to the terms of this Agreement. There is no intended third party beneficiary to this Agreement.

**Section 21. Right-Of-Access.**

City will obtain and/or furnish right-of-access on any project site for Professional to perform any required studies, surveys, tests or other necessary investigations in relation to the Scope of Services.

**Section 22. Exhibits.**

The exhibits attached hereto are incorporated herein and made a part hereof for all purposes.

**Section 23. Survival of Obligations.**

Any of the representations and obligations of the parties, as well as any rights and benefits of the parties pertaining to a period of time following the termination of this Agreement shall survive termination.

**Section 24. Counterparts.**

This Agreement may be executed by the parties in separate counterparts, each of which when so executed and delivered shall be an original, but all such counterparts shall together constitute one and the same instrument. Each counterpart may consist of any number of copies hereof each signed by less than all, but together signed by all of the parties.

**Section 25. Notice.**

Any notice required or permitted to be delivered hereunder may be sent by first class mail, overnight courier or by confirmed electronic mail to the address specified below, or to such other party or address as either party may designate in writing, and shall be deemed received three (3) days after delivery set forth herein:

| | |
|---|---|
| If to City: | Wesley S. Pierson, City Manager<br>City of Town of Addison<br>5300 Belt Line Road<br>Town of Addison, Texas 75254<br>E: wpierson@addisontx.gov |
| With copy to: | Whitt Wyatt, City Attorney<br>3710 Rawlins St., Ste 1000<br>Dallas, Texas 75219<br>E: whitt@woodbanowsky.com |
| If to Professional: | Dennis DeLisse, Principal<br>MPI Architects<br>4949 Addison Circle<br>Addison, Texas 75001<br>E: _____ |

**Section 26. Authorization.**

Each party represents that it has full capacity and authority to grant all rights and assume all obligations granted and assumed under this Agreement.

**Section 27. Successors and Assigns.**

Subject to the provisions regarding assignment, this Agreement shall be binding on and inure to the benefit of the parties to it and their respective heirs, executors, administrators, legal representatives, successors and assigns.

**Section 28. Recitals.**

The recitals to this Agreement are incorporated herein.

**Section 29. Audits and Records.**

Professional agrees that during the term hereof the City and its representatives may, during normal business hours and as often as deemed necessary, inspect, audit, examine and reproduce any and all of Professional's records relating to the services provided pursuant to this Agreement for a period of one year following the date of completion of services as determined by the City or date of termination if sooner.

**Section 30. Conflicts of Interests.**

Professional represents that no official or employee of the City has any direct or indirect pecuniary interest in this Agreement.

**Section 31.** **Hazardous Materials**.

Professional shall report the presence and location of any hazardous materials it notices or which an engineer of similar skill and experience should have noticed to the City.

**Section 32.** **No Boycott Israel**.

Pursuant to Texas Government Code Chapter 2270, Professional's execution of this Agreement shall serve as verification that Professional's organization does not presently boycott Israel and will not boycott Israel during the term of this Agreement. Pursuant to Texas Government Code Chapter 2251, Professional's execution of this Agreement shall further serve as verification that Professional does not current discriminate against firearm and ammunition industries and will not for the term of this Agreement. Discriminating means refusing to deal with, terminating business activities with, or otherwise taking any action that is intended to penalize, inflict economic harm on, or limit commercial relations specifically with the firearm or ammunition industry or with a person or entity doing business in the firearm or ammunition industry, but does not include an action made for ordinary business purposes.

[REMAINDER OF PAGE INTENTIONALLY LEFT BLANK -
SIGNATURE PAGE FOLLOWS]

IN WITNESS WHEREOF, the parties have executed and delivered this Agreement as of the date of last execution hereof.

| **FOR CITY:** | **FOR PROFESSIONAL** |
|---|---|
| **Town of Addison, Texas** | **MPI Architects** |
| By:_____<br>Wesley S. Pierson, City Manager | By:_____<br>Dennis DeLisse, Principal |
| Date: _____ | Date: 1-5-2022 |

ATTEST:

By:_____
Irma Parker, City Secretary

**EXHIBIT "A"**
**SCOPE OF SERVICES**

(attached)

MPI Architects

September 13, 2021

Rob Bourestom
Director of General Services
Town of Addison
16801 Westgrove Drive
Addison, Texas 75001

Re: **Town of Addison Phase II Facilities Utilization Study**

Mr. Bourestom:

MPI Architects appreciates the opportunity to provide the Town of Addison with a proposal for Professional Services for the 'Town of Addison Phase II Facilities Utilization Study'. The proposed services include further analysis of Phase I Facilities Utilization Study (previously completed by LPA).

## PROJECT DESCRIPTION

The Town of Addison has previously executed a Phase I Study that shall be expanded to incorporate further analysis of the existing infrastructure of the Town of Addison. The additional information will assist the Town of Addison to present the analysis to City Council with budgetary "rough order of magnitude" (ROM) costs for three (3) options:

1. Town of Addison remaining in the existing buildings & re-organizing the departments with building upgrades to current building codes

2. Square footage requirements to expand existing buildings and existing building upgrades to current building codes

3. Rough square footage requirements for a new "City Center"

4. Buildings to include:
   a. Central Fire
   b. Conference Center
   c. Finance
   d. Fire Station #2
   e. Police & Courts
   f. Service Center
   g. Addison Theater
   h. Town Hall
   i. Tree House

Construction of ADA upgrades are in process under the current bond program and are not part of this analysis.



Architecture ▪ Planning ▪ Interior Design

4949 Addison Circle ▪ Addison, Texas 75001 ▪ (972) 788-0078 www.mpiarch.com

MPI Architects

## SCOPE of WORK

1. Building/Facility Analysis
   - A. Program including space requirements and proximities
     - 1.Confirm general data previously collected from Phase I
     - 2. Refine data as required
     - 3.Visit with each department for full day sessions to confirm needs of previous study.
   - B. Existing Building Review
     - 1. Building Shell
       - a. Roof, walls, windows, doors
       - b. Building HVAC
       - c. Building Electrical and Communication
       - d. Building Security
       - e. Energy deficiencies
     - 2. Site Review
       - a. Parking Quality and Quantity
       - b. Landscape and Irrigation
     - 3. Building and Site TAS required improvements (based on previous ADA report completed by others)
   - C. 'Rough Order of Magnitude' (ROM) Cost for the following:
     1. Each Building Modernized
     2. Each building Renovated per program requirements
     3. Each building required additions to meet program requirements.
     4. Site improvements to meet current needs
     5. Site improvements to meet program needs
     6. Cost to replace facility with new facility including site if applicable (excluding cost of land)
     7. Cost to remove existing facility and site if applicable
   - D. Illustrate cost comparison between existing facility and new facility in broad cost terms.

## COMPENSATION

| | Architectural |
|---|---|
| Phase I | $120,000 |
| | |
| SUB-TOTAL | **$120,000** |
| | |
| Expenses | $2,500 |
| | |
| TOTAL FEE | **$122,500** |



4949 Addison Circle ▪ Addison, Texas 75001 ▪ (972) 788-0078 www.mpiarch.com

MPI Architects

## EXCLUSIONS

1. Consultant services: civil engineering, interior design, kitchen equipment design and layout, acoustical engineering, landscape design.
2. Fire sprinkler and alarm engineering.
3. Geotechnical Engineering and Soils Testing.
4. Asbestos Testing at existing building.
5. Asbestos or Lead-Based Paint design documents.
6. Payment and Performance Bonds.
7. Systems or consultants other than described under scope of services above.
8. Boundary Verification and Platting.
9. Site Plan Application.
10. Permitting and Approvals.
11. Taxes/fees: city state and federal
12. Construction cost estimating
13. Construction management
14. FF&E: Fixtures, Furniture & Equipment selection and procurement
15. Signage design, engineering and permitting
16. Record As-built Documents.
17. Low voltage design, CCTV, Access Control Systems, security systems, etc.

[continues on following page]

MPI Architects

# Schedule of Hourly Rates by Personnel Classification

Charges for architectural, planning, interior design, production, and administrative services are based on the following hourly rates:

**Administrative - $85.00/hour**

**Architectural/Interiors Production - $95.00/hour**

**Architect, Planner, Interior Designer - $125.00/hour**

**Project Manager - $165.00/hour**

**Principal - $195.00/hour**

**Expenses:**

The charges for reimbursable expenses are:

1. Reproduction work – multiple of 1.1 of receipted invoice.
2. Travel and subsistence – multiple of 1.1 of receipted invoice.
3. Consultants – multiple of 1.1 of receipted invoice.
4. All other expenses – multiple of 1.1 of receipted invoice.

**This schedule is subject to change with written notice.**

[end of scope of services]



Architecture ▪ Planning ▪ Interior Design

4949 Addison Circle ▪ Addison, Texas 75001 ▪ (972) 788-0078 www.mpiarch.com

**Council Meeting** **10.**

**Meeting Date:** 01/11/2022

**Department:** General Services

**Pillars:** Excellence in Asset Management

**Milestones:** Implement the Asset Management Plan in accordance with the Asset Management Policy, utilizing information systems

---

**AGENDA CAPTION:**

Consider Action on a **Resolution Approving the Purchase of (2) 2022 BMW Police Motorcycles for the Town of Addison Police Department Utilizing an Interlocal Agreement with the City of Fort Worth, Texas and Authorizing the City Manager to Execute the Purchase Order** in an Amount Not to Exceed $55,251.74.

**BACKGROUND:**

The Asset Management System (AMS) is utilized to track the Town's vehicles. Staff reviews and evaluates the condition of the vehicles on an annual basis to determine which assets warrant replacement.

Purchasing cooperatives solicit competitive bids from many vendors for products and services for their members. Purchasing through a cooperative streamlines the procurement process for public entities resulting in a savings of both administrative time and money. Staff identified the vendor and purchasing cooperative in the table below as being able to provide the replacement motorcycles needed.

The Capital Equipment Replacement Fund (CERF) was established to accumulate sufficient resources to replace existing capital rolling stock and equipment that has reached the end of its useful life. Capital Equipment Replacement Fund resources acquired through charges to operating departments. The charges are calculated using a straight line depreciation method based on an item's expected life.

Using funds budgeted in the Fiscal Year 2021-2022 CERF, the following vehicles are recommended for replacement based on the AMS and staff condition assessment.

**Recommended Replacement From Fiscal Year 2021-2022 CERF**

| Items | Department | Total Cost | Budgeted Amount | Vendor |
|---|---|---|---|---|

| | | | | |
|---|---|---|---|---|
| (2) 2022 BMW | Police | $55,251.74 | $60,000.00 | BMW Motorcycles of North Dallas |

**RECOMMENDATION:**

Administration recommends approval.

---

**Attachments**

Resolution - Approving the Purchase of BMW Motorcycles

---

**RESOLUTION NO. _____**

**A RESOLUTION OF THE CITY COUNCIL OF THE TOWN OF ADDISON, TEXAS APPROVING THE PURCHASE OF TWO (2) BMW MOTORCYCLES FOR THE TOWN OF ADDISON POLICE DEPARTMENT UTILIZING AN INTERLOCAL COOPERATIVE PURCHASING AGREEMENT WITH THE CITY OF FORT WORTH; AUTHORIZING THE CITY MANAGER TO EXECUTE THE PURCHASE ORDER; AND PROVIDING AN EFFECTIVE DATE.**

**WHEREAS,** the City Council desires to authorize the purchase of two BMW motorcycles for the Town of Addison Police Department; and

**WHEREAS,** City staff utilized the current interlocal cooperative purchasing agreement between the Town of Addison and the City of Fort Worth to identify BMW Motorcycles of North Dallas the preferred vendor and obtain a price proposal for the purchase of the above-referenced vehicle(s), a true and correct copy of which is attached to this Resolution as **Exhibit "A"** (the "Quote").

**NOW, THEREFORE, BE IT RESOLVED BY THE CITY COUNCIL OF THE TOWN OF ADDISON, TEXAS:**

**SECTION 1**. The City Council hereby approves the purchase of the following vehicles from BMW Motorcycles of North Dallas in conformance with the Quote attached hereto as **Exhibit "A"**:

| Vehicle | Department | Qty | Price | Total |
|---|---|---|---|---|
| BMW R12RTP | Addison Police Department | 2 | $27,625.87 | $55,251.74 |

**SECTION 2.** The City Council hereby authorizes the City Manager to execute the purchase order(s) and such other documents as may be necessary to effectuate the foregoing purchase.

**SECTION 3.** This Resolution shall take effect from and after its date of adoption.

**DULY RESOLVED AND ADOPTED** by the City Council of the Town of Addison, Texas, on this the ***11th*** day of ***JANUARY 2022.***

**TOWN OF ADDISON, TEXAS**

_____
Joe Chow, Mayor

**ATTEST:**

_____
Irma Parker, City Secretary

# EXHIBIT A

## R 1250 RT-P Motor Pricing Form

BMW Motorrad

| | Color | Option Code |
|---|---|---|
| 0 | Night Black & Alpine White III | 753 |
| 0 | Night Black | 716 |
| 1 | Alpine White III (special order) | 751 |
| 0 | Black Blue (special order +60 days) | 754 |
| 0 | Saphir Blue (special order + 60 days) | 755 |
| 0 | Violet Blue (special order +60 days) | 756 |
| 0 | Glacier Silver Metallic (special order) | N99 |

| | Quotation: | | | Motorcycle |
|---|---|---|---|---|
| | **Addison PD** | Option Code | Retail Price | $21,250.00 |
| | **Factory Special-Order Options - Plan 90-120 Days for Delivery** | | | |
| 0 | Adaptive Headlight (includes 219) | 134 | $550.00 | $0.00 |
| 0 | Keyless Ride w/two transmitters | 193 | $400.00 | $0.00 |
| 0 | Gear Shift Assist Pro | 222 | $450.00 | $0.00 |
| 0 | Ride Modes Pro (includes 18B) | 224 | $220.00 | $0.00 |
| 0 | Chrome Exhaust | 350 | $150.00 | $0.00 |
| 0 | Additional LED Headlights (driving lights) | 562 | $450.00 | $0.00 |
| 0 | PA Microphone | 599 | $565.00 | $0.00 |
| 0 | High Seat Black | 610 | $0.00 | $0.00 |
| 0 | Low Seat Black | 776 | $0.00 | $0.00 |
| | **The Options Below denote Standard Order Deck - Removal is only by Special Order - Option Delete** | | | |
| 1 | Heated Seat | 518 | $200.00 | $200.00 |
| 1 | Tire Pressure Monitoring | 530 | $200.00 | $200.00 |
| 1 | Cruise Control (standard feature) | 538 | $0.00 | $0.00 |
| 1 | Weather Protection | 649 | $185.00 | $185.00 |
| | **Additional Labor Operations Provided by Dealer** | | | |
| 1 | FMSA-MT-SSE SIDE STAND EXTENSION | | | $36.00 |
| 1 | FMSA-EL-ACP ACC 1-3 CONNECTION PLUG | | | $9.50 |
| 1 | FMSA-EL-RPP RADIO CONNECTION PLUG CODE A | | | $10.00 |
| 1 | FMSA-EL-SCP SPEAKER CONNECTION PLUG | | | $9.50 |
| 1 | FMSA-EL-FFH FORNT FUSED POWER SCOCKET HARNESS | | | $33.00 |
| 1 | FMSA-MT-LGAP LIDAR GUN HOLSTER ADAPTER PLATE | | | $26.95 |
| 1 | FMSA-EA-USB FAIRING USB OULET | | | $49.00 |
| 1 | FMSA-EA-LSF FIARING MOUNT POWER SOCKET | | | $45.00 |
| 1 | FMSA-EL-RCP RADAR CONNECTION PLUG | | | $9.50 |
| | | | | $0.00 |

| Units | | | |
|---|---|---|---|
| 1 | Quotation valid for 60 days from date noted below. | Total Price - Page 1 | $22,063.45 |
| | | Total Price - Page 2 | $2,791.75 |
| | | Total Price - Page 3 | $528.44 |
| | 7/1/2020 | Accessories From Other Suppliers - Page 4 | $0.00 |
| | | Dealer Basic Assembly / Preparation | $1,747.23 |
| | | Motorcycle Freight | $495.00 |
| | | Total Retail Price per Unit with Options | $27,625.87 |
| | 0.00% | State Sales Tax (if applicable) | $0.00 |
| | | Total Retail Price per Unit with Options | $27,625.87 |

Note: Prices subject to change without notice. Final price is always determined by the selling authorized BMW Motorcycle dealer.

# EXHIBIT A

## R 1250 RT-P Motor Pricing Form - Page 2

See Special Notation Comment

**Quotation for:**
**Addison PD**

BMW Motorrad

| Per | | BMW P/N | Order # | Retail | Total Retail |
|---|---|---|---|---|---|
| | **Blue ID Light Selection (1)** | | | | |
| 1 | Standard Blue Pod-Mounted ID Lights - SID | 63 17 2 361 717 | | $0.00 | $0.00 |
| 0 | Round Blue License Plate ID Lights - RID | 71 60 2 452 897 | | $0.00 | $0.00 |
| | **Emergency Warning Lights (10)** | | | | |
| 5 | Red LED-X Light | 63 17 2 361 718 | 5 | $108.36 | $541.82 |
| 5 | Blue LED-X Light | 63 17 2 361 719 | 5 | $108.36 | $541.82 |
| 0 | Amber LED-X Light | 63 17 2 361 720 | 0 | $108.36 | $0.00 |
| 0 | White LED-X Light | 63 17 2 361 721 | 0 | $117.09 | $0.00 |
| 0 | Green LED-X Light | 63 17 2 450 782 | 0 | $117.09 | $0.00 |
| | **Rear Duplex Emergency Warning Light (1)** | | | | |
| 0 | Duplex LED-X Red / Red | 63 17 2 361 728 | 0 | $345.88 | $0.00 |
| 0 | Duplex LED-X Blue / Blue | 63 17 2 361 729 | 0 | $378.25 | $0.00 |
| 1 | Duplex LED-X Red / Blue | 63 17 2 361 730 | 1 | $362.07 | $362.07 |
| 0 | Duplex LED-X Blue / Amber | 63 17 2 361 731 | 0 | $362.07 | $0.00 |
| 0 | Duplex LED-X Green / Green | 63 17 2 450 783 | 0 | $362.07 | $0.00 |
| 0 | Duplex LED-X Amber / Amber | 63 17 2 450 784 | 0 | $362.07 | $0.00 |
| | **Take-Down (4) Alley (2) TS (2) BT (2) Saddlebag Light (1) Red ID (1)** | | | | |
| 6 | White Torus LED TDL/Alley | 63 17 2 361 722 | 6 | $76.91 | $461.44 |
| 2 | Auxiliary LED Turn Signals | 63 17 2 361 725 | 2 | $72.82 | $145.65 |
| 2 | Auxiliary LED Brake/Tail Light | 63 17 2 361 726 | 2 | $56.64 | $113.27 |
| 1 | Saddlebag LED Lights w/sensor switch | 63 17 2 361 727 | 1 | $143.61 | $143.61 |
| 0 | Red ID Lights (replacing blue ID lights) | 63 17 2 361 724 | 0 | $107.33 | $0.00 |
| 0 | Round Blue License Plate ID Light Kit | 71 60 2 452 876 | 0 | $130.59 | $0.00 |
| | **Dealer Installed Options / Retrofits** | | | | |
| 0 | Shift Assistant Pro (hardware) | 23 41 8 536 884 | 0 | $677.22 | $0.00 |
| 0 | Shift Assistant Pro - Enabling Code | 77 15 8 395 839 | 0 | $40.54 | $0.00 |
| 0 | Ride Modes Pro - Enabling Code | 77 53 8 395 840 | 0 | $202.89 | $0.00 |
| 0 | Also Requires DTC Enabling Code | 77 53 8 395 841 | 0 | $52.71 | $0.00 |
| 0 | LED Auxiliary Headlights Nano (order 2) | 63 17 8 556 937 | 0 | $154.00 | $0.00 |
| 0 | Bolt 6 x 40 (order 2) | 63 12 7 699 141 | 0 | $5.35 | $0.00 |
| 0 | M6 Hex Nut (order 2) | 07 12 9 905 826 | 0 | $3.06 | $0.00 |
| | Requires Activation by Dealer - No Code Needed | | | | |
| | **Convenience Options** | | | | |
| 0 | Extra Ignition Key - No Keyless Ride | 51 25 8 540 950 | 0 | $91.60 | $0.00 |
| 1 | Extra Ignition Key - Keyless Fob Transmitter | 66 12 8 555 168 | 1 | $320.66 | $320.66 |
| 0 | Heated Seat - Low | 52 53 8 544 786 | 0 | $529.58 | $0.00 |
| 0 | Heated Seat - High | 52 53 8 544 792 | 0 | $529.58 | $0.00 |
| 0 | Tire Pressure Gauge | 82 12 0 140 377 | 0 | $32.12 | $0.00 |
| 1 | BMW Motorrad Battery Charger (2.5 Ah) | 77 02 2 470 951 | 1 | $161.41 | $161.41 |
| 0 | DVD Repair Manuals R Models K5x | 01 59 8 405 651 | 0 | $91.55 | $0.00 |
| 0 | Motorcycle Full Cover | 71 60 2 450 408 | 0 | $136.88 | $0.00 |

Note: Prices subject to change without notice. Always verify accuracy of part pricing before submitting quotations.
Final price is always determined by the selling authorized BMW Motorcycle dealer.

# EXHIBIT A

# R 1250 RT-P Motor Pricing Form - Page 3




**Quotation for:**
**Addison PD**

## Additional Accessories

| Qty Per | Item Description<br>Additional Accessories | BMW P/N | Order # | Retail | Page 3<br>Total Retail |
|---|---|---|---|---|---|
| | **GPS Navigation** | | | | |
| 0 | BMW Navigator VI GPS Kit Complete | 77 52 8 504 069 | 0 | $759.20 | $0.00 |
| 0 | Retro Fit for Instrument Cluster Nav VI* | 46 63 8 553 830 | 0 | $326.71 | $0.00 |
| | * Parts Needed to Retrofit Nav to Std. Order Deck Unit | | | | |
| 0 | Car Kit for Navigator VI | 77 52 8 544 460 | 0 | $147.41 | $0.00 |
| | **Storage Options** | | | | |
| 0 | Saddlebag Liners (each) | 71 60 7 704 109 | 0 | $123.46 | $0.00 |
| 0 | Tank Top Bag | 77 45 8 543 227 | 0 | $291.18 | $0.00 |
| | **Engine Protection** | | | | |
| 1 | Rocker Cover Protection | 77 14 8 406 187 | 1 | $225.18 | $225.18 |
| 1 | Sump / Engine Protection Guard (order 1) | 11 84 8 532 939 | 1 | $120.22 | $120.22 |
| 5 | Fillister Head Screws M6 x 20 (order 5) | 07 12 9 908 076 | 5 | $3.15 | $15.76 |
| 5 | Grommet (order 5) | 13 53 1 341 283 | 5 | $2.58 | $12.88 |
| 5 | Bushing (order 5) | 11 84 8 544 832 | 5 | $5.06 | $25.29 |
| 1 | Bracket front (order 1) | 11 84 8 532 937 | 1 | $53.87 | $53.87 |
| 1 | Bracket Rear (order 1) | 11 84 8 532 940 | 1 | $67.34 | $67.34 |
| 0 | C-Clip Nut M6 (have been included w/brackets) | 07 14 7 693 887 | 0 | $2.58 | $0.00 |
| 5 | Fillister Head Screws M8 x 25 (order 5) | 07 12 9 907 382 | 5 | $1.58 | $7.88 |

Note: Prices subject to change without notice. Always verify accuracy of part pricing before submitting quotations.
Final price is always determined by the selling authorized BMW Motorcycle dealer.

# EXHIBIT A

## Additional Accessories From Other Suppliers - Page 4

| Qty | Description | PN | Price Each | Total Price |
|---|---|---|---|---|

# EXHIBIT A

**INVOICE**

| | |
|---|---|
| **FROM:** | **Invoice order #** |
| **BMW Motorcycles Of North Dallas** | |
| 900 Avenue K suite #100 | |
| Plano, TX 75074 P) 972-881-0774 F) 972-881-1326 | **12/14/2021** |
| **TO:** | |
| **Town of Addison** | |
| 16801 Westgrove | |
| Addison, Tx 75001-5190 | |

| Item | Quantity | Description | Unit Price | Ext. Unit Price |
|---|---|---|---|---|
| 1 | 2 | Purchase of two BMW motorcycles per bid specs accepted by the ILA with Fort Worth PD for the town of Addison PO# | | |
| | | BMW R12RTP vin# | $27,625.87 | $27,625.87 |
| | | BMW R12RTP vin# | $27,625.87 | $27,625.87 |
| | | **SUB-TOTAL** | | $55,251.74 |
| | | **TAX** | | $0.00 |
| TAX #75-1333-555 | | | **Total Amount Owed** | **$55,251.74** |

**Council Meeting** **11.**

**Meeting Date:** 01/11/2022

**Department:** General Services

**Pillars:** Excellence in Asset Management

**Milestones:** Implement the Asset Management Plan in accordance with the Asset Management Policy, utilizing information systems

---

**AGENDA CAPTION:**

Consider Action on a **Resolution Approving the Purchase of (1) 2022 John Deere 310SL Backhoe from RDO Equipment CO, Through Sourcewell Cooperative Purchasing and Authorizing the City Manager to Execute the Purchase Order** in an Amount Not to Exceed $140,240.

**BACKGROUND:**

The Asset Management System (AMS) is utilized to track the Town's vehicles. Staff reviews and evaluates the condition of the vehicles on an annual basis to determine which assets warrant replacement.

Purchasing cooperatives solicit competitive bids from many vendors for products and services for their members. Purchasing through a cooperative streamlines the procurement process for public entities resulting in savings of both administrative time and money. Staff identified the vendor and purchasing cooperative in the table below as being able to provide the replacement backhoe needed.

The Capital Equipment Replacement Fund (CERF) was established to accumulate sufficient resources to replace existing capital rolling stock and equipment that has reached the end of its useful life. Capital Equipment Replacement Fund resources are acquired through charges to the operating departments. The charges are calculated using a straight line depreciation method based on an item's expected life.

Using funds budgeted in the Fiscal Year 2021-2022 CERF, the following vehicle is recommended for replacement based on the AMS and staff condition assessment.

**Recommended Replacement From Fiscal Year 2021-2022 CERF**

| Item | Department | Cost | Budgeted Amount | Cooperative | Vendor |
|---|---|---|---|---|---|

| | | | | | |
|---|---|---|---|---|---|
| 2022 John Deere 310SL Backhoe | Streets | $140,240.00 | $140,000.00 | Sourcewell | RDO Equipment Co. |

**RECOMMENDATION:**
Administration recommends approval.

---

**Attachments**

Resolution - Approving Purchase of a Backhoe

---

**RESOLUTION NO. _____**

**A RESOLUTION OF THE CITY COUNCIL OF THE TOWN OF ADDISON, APPROVING THE PURCHASE OF A NEW JOHN DEERE 310SL BACKHOE AS IDENTIFIED IN QUOTE ID #032119-JDC SUBMITTED BY RDO EQUIPMENT CO. THROUGH SOURCEWELL COOPERATIVE PURCHASING; AUTHORIZING THE CITY MANAGER TO EXECUTE THE PURCHASE ORDER AND RELATED DOCUMENTS; AND PROVIDING AN EFFECTIVE DATE.**

**WHEREAS,** the City Council desires to authorize the purchase of a John Deere 310SL Backhoe and related equipment from RDO Equipment Co., as more particularly described in the Investment Proposal from RDO Equipment Co., Sourcewell Quote ID #032119-JDC, dated November 1, 2021, which is attached to this Resolution as **Exhibit A** (the "Quote").

**NOW, THEREFORE, BE IT RESOLVED BY THE CITY COUNCIL OF THE TOWN OF ADDISON, TEXAS:**

**SECTION 1**. The City Council hereby approves the purchase of a John Deere 310SL Backhoe from RDO Equipment Co. in an amount not-to-exceed of $140,240.00, as more particularly described in the Quote attached hereto as **Exhibit A**. The City Manager is hereby authorized to execute such purchase orders and other documents as may be necessary to effectuate the purchase and delivery of the same.

**SECTION 2.** This Resolution shall take effect from and after its date of adoption.

**DULY RESOLVED AND ADOPTED** by the City Council of the Town of Addison, Texas, on this the ***11th*** day of ***JANUARY 2022*****.**

**TOWN OF ADDISON, TEXAS**

_____
Joe Chow, Mayor

**ATTEST:**

_____
Irma Parker, City Secretary

# EXHIBIT A

# Investment Proposal (Quote)

RDO Equipment Co.
3230 East Airport Freeway
Irving TX, 75062
Phone: (972) 438-4699 - Fax: (972) 438-6789

**Proposal for:**
TOWN OF ADDSION
16801 WESTGROVE DR
ADDISON, TX, 750015190
DALLAS

| | |
|---|---|
| **Investment Proposal Date:** | 11/1/2021 |
| **Pricing Valid Until:** | 1/31/2022 |
| **Deal Number:** | 1500385 |
| **Customer Account#:** | 2826032 |
| **Sales Professional:** | Brandon Aldridge |
| **Phone:** | (972) 438-4699 |
| **Fax:** | (972) 554-2132 |
| **Email:** | BAldridge@rdoequipment.com |

## Comments

SOURCEWELL QUOTE ID #032119-JDC

## Equipment Information

| Quantity | Serial Number / Stock Number | Hours (approx.) | Status / Year / Make / Model / Additional Items | Cash Price |
|---|---|---|---|---|
| 1 | TBD<br>TBD | 0 | New 2022 JOHN DEERE 310SL | $220,408.00 |
| | | | Customer Discount SOURCEWELL DISCOUNT (NOT BUYBOARD QUALIFIED) | ($86,683.00) |
| | | | Outside Parts and Labor 24" V-BOTTOM ROCK BUCKET | $3,175.00 |
| | | | Outside Parts and Labor FOAM FILLED FRONT TIRES | $2,355.00 |
| | | | Inside Parts REAR VIEW CAMERA | $985.00 |
| | | | Inside Parts 2-OPERATORS MANUALS ANDTINT | $0.00 |
| | | | **Equipment Subtotal:** | **$140,240.00** |

## Purchase Order Totals

| | |
|---|---|
| **Balance:** | $140,240.00 |
| **Total Taxable Amount:** | $0.00 |
| **TX STATE TAX:** | $0.00 |
| **TX CITY TAX:** | $0.00 |
| **TX SPECIAL TAX:** | $0.00 |
| **Sales Tax Total:** | $0.00 |
| **Sub Total:** | $140,240.00 |
| **Cash with Order:** | $0.00 |
| **Balance Due:** | **$140,240.00** |

# EXHIBIT A

## Equipment Options

| Qty | Serial Number | Year / Make / Model | Description |
|---|---|---|---|
| 1 | TBD | 2022 JOHN DEERE 310SL | 0A81T 310SL HL BACKHOE LOADER |
| | | | 2401 English Decals with English Operator and Safety Manuals |
| | | | 170K JDLink™ |
| | | | 3095 Mechanical Front Wheel Drive (MFWD) with Limited Slip Differential Autoshift Transmission |
| | | | 2035 Cab |
| | | | 9060 Front View Mirror |
| | | | 9919 Sun Visor |
| | | | 9970 Seat, Cloth Air-Suspension - Heated |
| | | | 4464 Galaxy 19.5L - 24 in. 12 PR Rear & 12.5/80-18 10PR Front |
| | | | 8685 Dual Maintenance Free Batteries With Disconnect and Jump Post |
| | | | 9116 LED Light Package |
| | | | 6020 Extendible Dipperstick |
| | | | 6230 Auxiliary Hydraulic with One & Two Way Flow (Hammer & Thumb/Swinger) |
| | | | 5285 Pilot Controls, Two Lever, with Pattern Selection |
| | | | 5421 Multi-Brand Quick Coupler - 37 Inch Thumb Ready |
| | | | 5656 24" (610 mm) Wide, Heavy-Duty, 7.5 Cu. Ft. (0.21 Cu. M.) Capacity Bucket |
| | | | 9230 37 Inch Hydraulic Backhoe Thumb - 4 Tine |
| | | | 9947 Heavy-Duty Stabilizer Pads |
| | | | AT308139 Forks, Pallet (2) 60 in.(1.52m) with 60 in. (1.52m) Coupler Fork Carriage |
| | | | 7690 1.32 Cu. Yd.(1.0 Cu. M.), 92 in.(234 mm) wide Multipurpose Coupler Bucket |
| | | | 7085 Loader Coupler, 3-Function Hydraulics, Single Lever |
| | | | 8485 1250 Lb. (567 kg) Front Counterweight |
| | | | 1065 John Deere PowerTech™ EWL 4.5L (276 Cu. In.) Engine Meets Final Tier 4 and Stage IV Emissions |
| | | | 9045 Chrome Exhaust Extension |
| | | | 9080 Engine Coolant Heater |
| | | | 9515 Diagnostic Oil Sampling Ports |
| | | | 9505 Full MFWD Driveshaft Guard |
| | | | 9120 Heavy-Duty Grille Frame |
| | | | AT333753 Backhoe Boom Protection Plate |

**Council Meeting** **12.**

**Meeting Date:** 01/11/2022

**Department:** Parks & Recreation

**Pillars:** Excellence in Asset Management

**Milestones:** Implement the Asset Management Plan in accordance with the Asset Management Policy, utilizing information systems

---

**AGENDA CAPTION:**

Consider Action to **Reject Proposals Received in Response to Bid #21-16 for Redding Trail Drainage and Amenity Improvements.**

**BACKGROUND:**

In November 2021, staff issued a Request for Proposals (RFP) on BidSync, as Bid Number 22-16 for the Redding Trail Drainage and Amenity Improvements. Bids were opened on December 9, 2021 and three general construction companies submitted proposals. Selection criteria for proposal evaluation was included in the specifications and is listed below:

- Contract Price - 50 Points
- Previous Experience - 25 Points
- Brief Overview of the Construction Schedule - 25 Points
- Construction Time - 25 Points

Upon review of the proposals, staff determined that none of the three respondents provide the requested work experience and construction schedule overview. Without this information the Town cannot identify the most qualified company to complete the work. Staff is requesting that Council reject the bids that were submitted. Staff intends to re-issue the RFP with a checklist for respondents to follow when submitting their proposal. The specifications used in RFP 22-16 follow the same specifications that have been used for bids in the past without issue which is why a checklist was not included with the initial bid. Moving forward, Parks staff will include a checklist on all future projects that are issued for bid.

**RECOMMENDATION:**

Administration recommends approval.

---

**Council Meeting** **13.**

**Meeting Date:** 01/11/2022

**Department:** Development Services

---

**AGENDA CAPTION:**

Hold a Public Hearing, Present, Discuss, and Consider Action on an **Ordinance Amending Planned Development (PD) District Ordinance O19-22 for a 10.88-Acre Property Located at the Southeast Corner of Belt Line Road and Montfort Drive in Order to Modify Use Regulations by Allowing Medical Office as a Permitted Use**. Case 1844-Z/Prestonwood Place.

**BACKGROUND:**

The Addison Planning and Zoning Commission, meeting in regular session on December 21, 2021, voted to recommend approval of an ordinance amending Planned Development (PD) District Ordinance O19-22 for a 10.88-acre property located at the southeast corner of Belt Line Road and Montfort Drive, in order to modify use regulations by allowing medical office as a permitted use, subject to the following condition:

- The property may be used for medical office uses providing non-emergency services, open and operational no longer than 18 hours on any given day.

Voting Aye: Catalani, Craig, DeFrancisco, Fansler, Meleky, Resnik, Souers
Voting Nay: none
Absent: none

SPEAKERS AT THE PUBLIC HEARING:

For: none
On: none
Against: none

Please refer to the Staff Report for additional details.

**RECOMMENDATION:**

Administration recommends approval.

---

**Attachments**

1844-Z Presentation
1844-Z Ordinance

# Prestonwood Place Planned Development Zoning Amendment (1844-Z)

# Case 1844-Z Prestonwood Place PD Amendment

## LOCATION:

Southeast corner of Belt Line Road and Montfort Drive.

## REQUEST:

To amend Planned Development (PD) District Ordinance O19-22 to allow medical office as a permitted use.

## ACTION REQUIRED:

Discuss, consider, and take action on the appropriateness of the proposed PD text amendment.

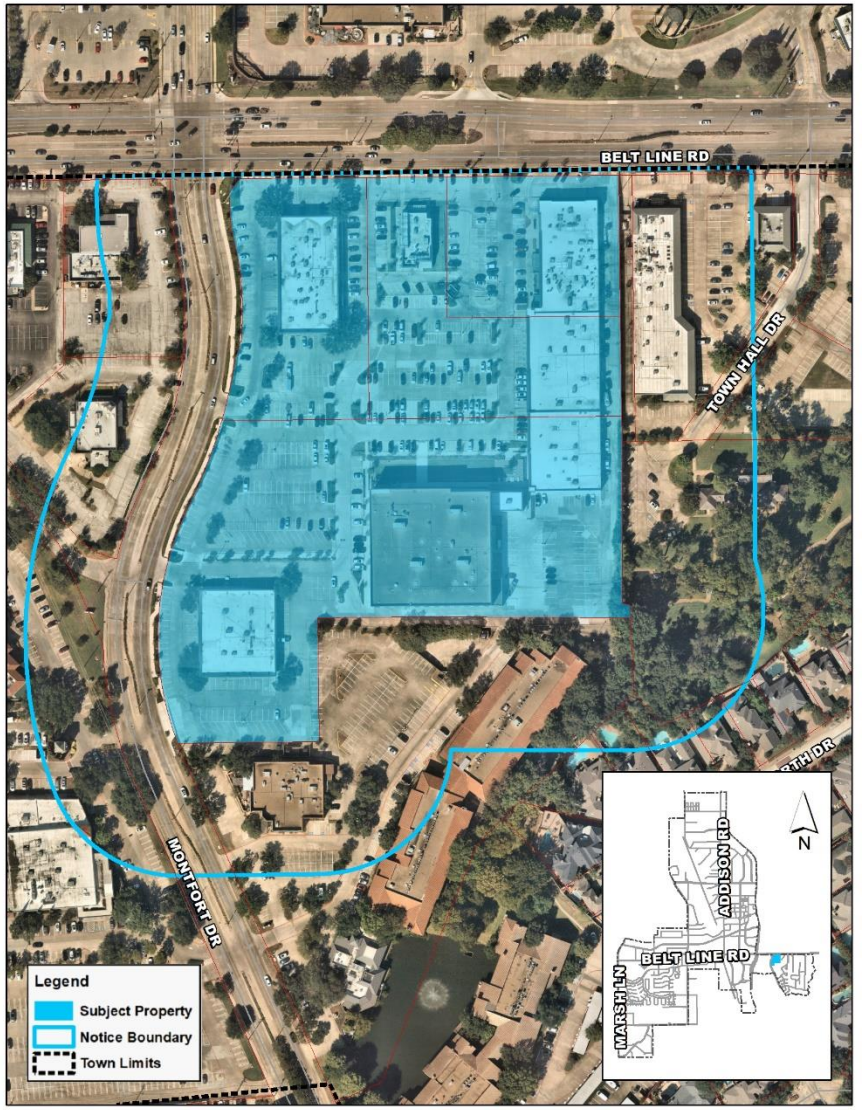

# Case 1844-Z Prestonwood Place PD Amendment












Photos by: Northwood Retail

## PROJECT HISTORY:

Late 1970s/Early 1980s – Prestonwood Place shopping center constructed

2019 – Rezoned to PD, based on LR standards. Facilitated reinvestment in the property; renovation of building facades, pedestrian improvements and additional landscaping.

Present – One Medical, membership-based primary care practice, is considering occupying a suite.

# Case 1844-Z Prestonwood Place PD Amendment

## Prospective tenant - One Medical:

- Membership-based primary care practice

- Locate in vibrant retail and mixed-use areas of large metropolitan regions

## Zoning definition of medical office:

- An office for the examination and treatment of outpatients, including dental examinations and treatments



# Case 1844-Z Prestonwood Place PD Amendment

## Current PD (Ordinance O19-22):

- Based on Local Retail (LR) District regulations with modified development standards

    - Mixed-use parking ratio (1/200)

## Proposed PD Amendment:

- Allow medical office as a permitted use

# Case 1844-Z Prestonwood Place PD Amendment

## Local Retail (LR) District:

- Consists of local shopping facilities intended to provide a mix of services

- Uses allowed include:
  - Retail Sales
  - Art gallery
  - Office
  - Personal Service (barber/beauty shop)
  - Florist
  - Print shop
  - Health studio
  - Restaurant (with SUP)

# Case 1844-Z Prestonwood Place PD Amendment

## Town's Comprehensive Plan:

- Reinvestment focus on maintaining healthy inventory of compatible and viable uses

## Unified Development Code (UDC) draft:

- An on-going, active project to update the Town's zoning and development standards

- Medical clinic is permitted in most nonresidential zoning districts

# Case 1844-Z Prestonwood Place PD Amendment

## Benchmark Comparison:

**Medical Office Use is <u>permitted by right</u> in comparable retail zoning districts in the following communities:**

- Plano
- Frisco
- Coppell
- Carrollton
- Farmers Branch
- Southlake
- Prosper
- Celina
- Little Elm
- University Park
- Grapevine
- Colleyville
- Allen

# Case 1844-Z Prestonwood Place PD Amendment

**PUBLIC NOTICE:**

Notice of public hearing was provided to property owners within 200 feet of the subject property in accordance with Town and State law.

**NOTICE RECIPIENTS:** 18.

**FOR:** None.
**AGAINST:** None.
**NEUTRAL:** None.

**PLANNING & ZONING COMMISSION ACTION**

Approval: 7 – 0, with conditions:

- Limited to medical office uses providing **non-emergency services**
- Medical office uses to **operate no more than 18 hours on any given day**

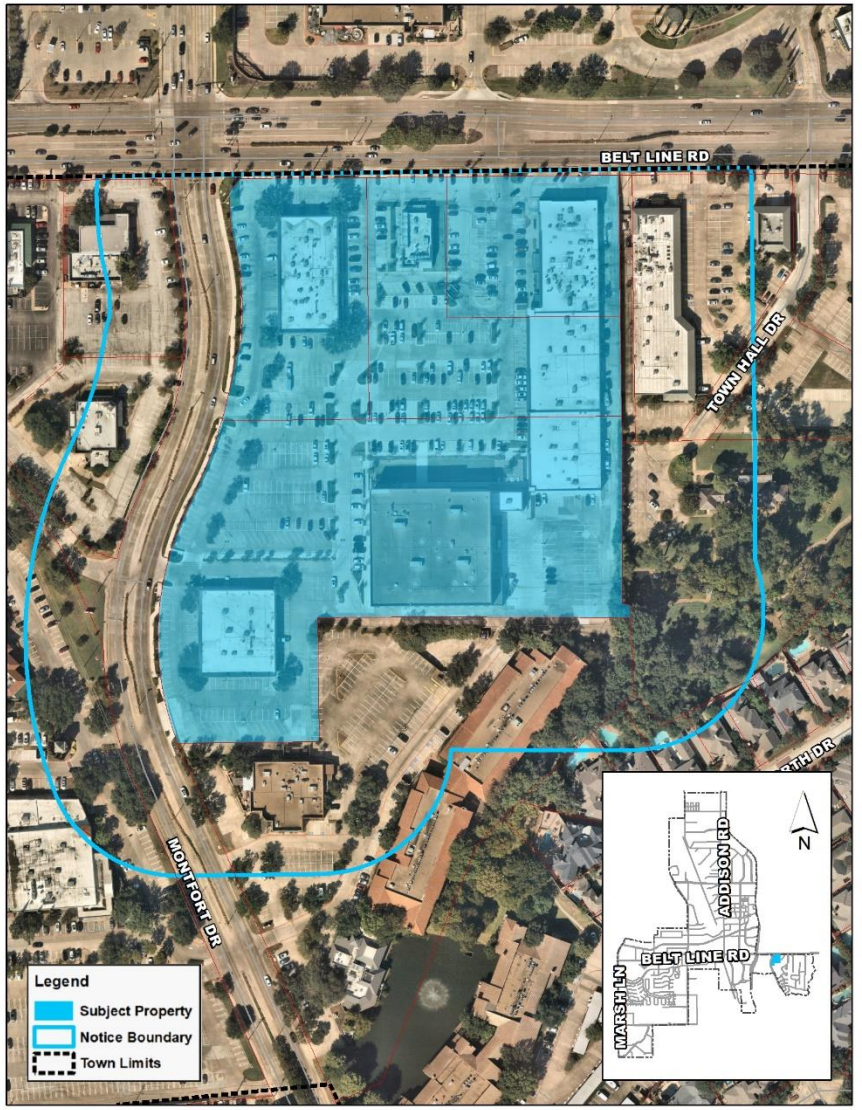

# Case 1844-Z Prestonwood Place PD Amendment

**RECOMMENDATION:**

Staff recommends **approval of the request, with the following conditions:**

- Limited to medical office uses providing **non-emergency services**
- Medical office uses to **operate no more than 18 hours on any given day**

**ORDINANCE NO. _____**

**AN ORDINANCE OF THE TOWN OF ADDISON, TEXAS, AMENDING THE COMPREHENSIVE ZONING ORDINANCE BY AMENDING AND RESTATING PLANNED DEVELOPMENT (PD) DISTRICT ORDINANCE O19-22 FOR A 10.88-ACRE PROPERTY LOCATED AT THE SOUTHEAST CORNER OF BELT LINE ROAD AND MONTFORT DRIVE; PROVIDING FOR MEDICAL OFFICE AS A PERMITTED USE; PROVIDING A PENALTY NOT TO EXCEED TWO THOUSAND DOLLARS ($2,000.00) FOR EACH OFFENSE; PROVIDING A SAVINGS CLAUSE, SEVERABILITY CLAUSE, AND AN EFFECTIVE DATE.**

**WHEREAS**, on June 11, 2019, the City Council for the Town of Addison, Texas adopted Planned Development (PD) District Ordinance O19-22 ("PD O19-22") for a 10.88 acre property located at the the southeast corner of Belt Line Road and Montfort Drive (the "Property"); and

**WHEREAS**, at its regular meeting held on December 21, 2021 the Planning & Zoning Commission considered and made recommendations on a request to amend PD O19-22 by allowing medical office as a permitted use (Case No.1838-Z); and

**WHEREAS,** the City Council desires to amend and restate PD O19-22, in its entirety, to provide for medical office as a permitted use; and

**WHEREAS,** this change of zoning is in accordance with the adopted Comprehensive Plan of the Town of Addison, as amended; and

**WHEREAS**, after due deliberations and consideration of the recommendation of the Planning and Zoning Commission, the information received at a public hearing, and other relevant information and materials, the City Council of the Town of Addison, Texas finds that this amendment promotes the general welfare and safety of this community.

**NOW THEREFORE, BE IT ORDAINED BY THE CITY COUNCIL OF THE TOWN OF ADDISON, TEXAS:**

**SECTION 1.** That the recitals and findings set forth above are hereby found to be true and correct and incorporated as if fully set forth herein.

**SECTION 2.** The Zoning Ordinance and official zoning map is hereby amended so as to amend and restate PD O19-22, in its entirety, and to provide for medical office as a permitted use for the Property, which is described and depicted in **Exhibit A** attached hereto and incorporated herein.

**SECTION 3**. PD O19-22 development stipulations are to read as follows:

A. The Property shall be improved in accordance with the site plan, landscape plan, and building elevations, which are attached hereto as **Exhibit B** and made a part hereof for all purposes.

B. All development and/or improvement of the the Property shall be in conformance with the Local Retail (LR) district standards, as amended, subject only to the following exceptions:

i. All parking in the center shall be set at a mixed-use development ratio of one space per 200 square feet of space (1/200).

ii. The property may be developed with modifications to the LR design standards for façade materials, building height, and parking requirements as shown on **Exhibit B**.

iii. In addition to the uses allowed by the LR district regulations, the Property may be used for medical office uses providing non-emergency services, open and operational no longer than 18 hours on any given day.

**SECTION 4.** The provisions of the Town of Addison Code of Ordinances, as amended, shall remain in full force and effect save and except as amended by this ordinance.

**SECTION 5.** Any person, firm, or corporation violating any of the provisions or terms of this ordinance shall be subject to the same penalty as provided for in the Comprehensive Zoning Ordinance of the city, as heretofore amended, and upon conviction shall be punished by a fine set in accordance with Chapter 1, Section 1-7 of the Code of Ordinances for the Town of Addison.

**SECTION 6.** The provisions of this Ordinance are severable, and should any section, subsection, paragraph, sentence, phrase or word of this Ordinance, or application thereof to any person, firm, corporation or other business entity or any circumstance, be adjudged or held to be unconstitutional, illegal or invalid, the same shall not affect the validity of the remaining or other parts or portions of this Ordinance, and the City Council hereby declares that it would have passed such remaining parts or portions of this Ordinance despite such unconstitutionality, illegality, or invalidity, which remaining portions shall remain in full force and effect.

**SECTION 7.** All ordinances of the City in conflict with the provisions of this ordinance be, and the same are hereby repealed and all other ordinances of the City not in conflict with the provisions of this ordinance shall remain in full force and effect.

**SECTION 8**. This Ordinance shall become effective from and after its passage and approval and after publication as may be required by law or by the City Charter or ordinance.

**PASSED AND APPROVED** by the City Council of the Town of Addison, Texas, on this the ***11TH*** day of ***JANUARY 2022*****.**

**TOWN OF ADDISON, TEXAS**

_____

Joe Chow, Mayor

**ATTEST:**

Irma Parker, City Secretary

**APPROVED AS TO FORM:**

Whitt Wyatt, City Attorney

# EXHIBIT A

## LEGAL DESCRIPTION OF THE PROPERTY

Tract 2:

BEING a tract of land situated in the Allen Bledsoe Survey, Abstract No. 157, Town of Addison, Dallas County, Texas, and being a part of Lot A, Block 2, Oaks North-East No. 1, an Addition to the Town of Addison, according to the plat thereof recorded in Volume 79121, Page 603, Map Records, Dallas County, Texas, and being all of Lot B, Block 2, Oaks North-East No. 2, an Addition to the Town of Addison, according to the plat thereof recorded in Volume 79121, Page 595, Map Records, Dallas County, Texas, and all of Lot C, Block 2, Oaks North-East No. 3, an Addition to the Town of Addison, according to the plat thereof recorded in Volume 79121, Page 587, Map Records, Dallas County, Texas, and being more particularly described as follows:

BEGINNING at a 1/2" iron rod found for corner in the south line of Belt Line Road (100' R.O.W.), said corner being at the northeast end of a corner clip at the intersection of said south line with the east line of Montfort Drive (80' R.O.W.), said corner also being the north corner of a Right-of-Way Dedication to the Town of Addison as recorded in Volume 93199, Page 4620, Deed Records, Dallas County, Texas;

THENCE N 89°49'50" E, along said south line, a distance of 582.78 feet to a pk nail set for corner, said corner being the northeast corner of the abovementioned Oaks North-East No. 3 and the northwest corner of the Lake Forest Addition, an Addition to the Town of Addison, as recorded in Volume 79168, Page 2399, Map Records, Dallas County, Texas;

THENCE S 0°10'10" E, departing said south line and along the west line of said Lake Forest Addition, a distance of 366.56 feet to a pk nail set for corner, said corner also being the northeast corner of Lot D, Block 2, Oaks North-East No. 4, an Addition to the Town of Addison, as per the plat recorded in Volume 79121, Page 555, Map Records, Dallas County, Texas;

THENCE S 89°49'50" W, departing said west line and along the north line of said Addition, a distance of 604.08 feet to an "x" cut found for corner in the aforementioned east line of Montfort Drive, said corner also being in a curve to the left having a central angle of 10°02'14", a radius of 540.00 feet, a tangent of 47.42 feet and a chord bearing and distance of N 10°23'09" E, 94.48 feet;

THENCE along said east line and along said curve to the left, an arc distance of 94.60 feet to a 1/2" iron rod found for corner at the beginning of a curve to the right having a central angle of 5°17'30", a radius of 392.50 feet, a tangent of 18.14 feet and a chord bearing and distance of N 6°52'29" E, 36.24 feet;

THENCE along said curve to the right and with said east line, an arc distance of 36.25 feet to a 1/2" iron rod found for corner at the beginning of a curve to the left having a central angle of 17°09'59", a radius of 258.00 feet, a tangent of 38.94 feet and a chord bearing and distance of N 2°02'36" E, 77.01 feet;

THENCE along said curve to the left and with said east line, an arc distance of 77.30 feet to a 1/2" iron rod found for corner at the beginning of a curve to the left having a central angle of 6°25'56", a radius of 549.00 feet, a tangent of 30.85 feet and a chord bearing and distance of N 9°45'19" W, 61.60 feet;

THENCE along said curve to the left and with said east line, an arc distance of 61.63 feet to a 1/2" iron rod found for corner at the beginning of a curve to the right having a central angle of 10°24'14", a radius of 451.00 feet, a tangent of 41.06 feet and a chord bearing and distance of N 7°15'57" W, 81.78 feet;

THENCE along said curve to the right and with said east line of Montfort Drive, an arc distance of 81.89 feet to a 5/8" capped iron rod set for corner at the southwest end of the abovementioned corner clip at the intersection of said east line and the abovementioned south line of Belt Line Road;

THENCE N 41°43'23" E, along said corner clip, a distance of 25.36 feet to the POINT OF BEGINNING and containing 215,741 square feet or 4.9527 acres of land, more or less.

# EXHIBIT A

Tract 3:

BEING a tract of land situated in the Allen Bledsoe Survey, Abstract No. 157, Town of Addison, Dallas County, Texas, and being a part of Oaks North-East No. 4, an Addition to the Town of Addison, according to the plat thereof recorded in Volume 79121, Page 555, Map Records, Dallas County, Texas, and being more particularly described as follows:

BEGINNING at a pk nail with washer stamped "RPLS 4625" set for corner in the east line of Montfort Drive (80' at this point), said corner being the northwest corner of said Oaks North-East No. 4 and the southwest corner of Oaks North-East No. 1, an Addition to the Town of Addison, as per the plat thereof recorded in Volume 79121, Page 603, Map Records, Dallas County, Texas;

THENCE N 89°49'50" E, along the common line between said Additions, a distance of 604.08 feet to a pk nail with washer stamped "RPLS 4625" set for corner in the west line of Lake Forest Addition, an Addition to the Town of Addison, as recorded in Volume 79168, Page 2399, Map Records, Dallas County, Texas;

THENCE S 0°10'10" E, along the west line of said Lake Forest Addition, a distance of 298.55 feet to a 1/2" "SJF" capped iron rod found for corner;

THENCE S 75°13'25" E, a distance of 12.84 feet to a 1/2" "SJF" capped iron rod found for corner;

THENCE S 0°10'10" E, a distance of 19.00 feet to a pk nail with washer stamped "RPLS 4625" set for corner, said corner being the northeast corner of Prestonwood Pond II, as recorded in Volume 86088, Page 444, Deed Records, Dallas County, Texas;

THENCE S 89°49'50" W, along the north line of said tract, a distance of 485.00 feet to a pk nail set for corner, said corner being the most easterly northwest corner of said tract;

THENCE S 0°10'10" E, a distance of 197.00 feet to a 5/8" "BDD" capped iron rod set for corner, said corner being a re-entrant corner of said tract;

THENCE S 89°49'50" W, a distance of 195.47 feet to a 1/2" iron rod found for corner in the east line of the abovementioned Montfort Drive, said corner also being the most westerly northwest corner of said tract;

THENCE N 23°24'00" W, along said east line, a distance of 2.67 feet to a 1/2" iron rod found for corner at the beginning of a curve to the right having a central angle of 51°50'50", a radius of 460.00 feet, a tangent of 223.60 feet and a chord bearing and distance of N 2°31'25" E, 402.20 feet;

THENCE along said curve to the right and with said east line of Montfort Drive, an arc distance of 416.26 feet to an 1/2" iron rod found for corner at the beginning of a reverse curve to the left having a central angle of 13°02'34", a radius of 540.00 feet, and a chord bearing and distance of N 21°55'33" E, 122.66 feet;

THENCE along said reverse curve to the left and with said east line, an arc distance of 122.93 feet to the POINT OF BEGINNING and containing 257,353 square feet or 5.9080 acres of land, more or less.

# EXHIBIT A

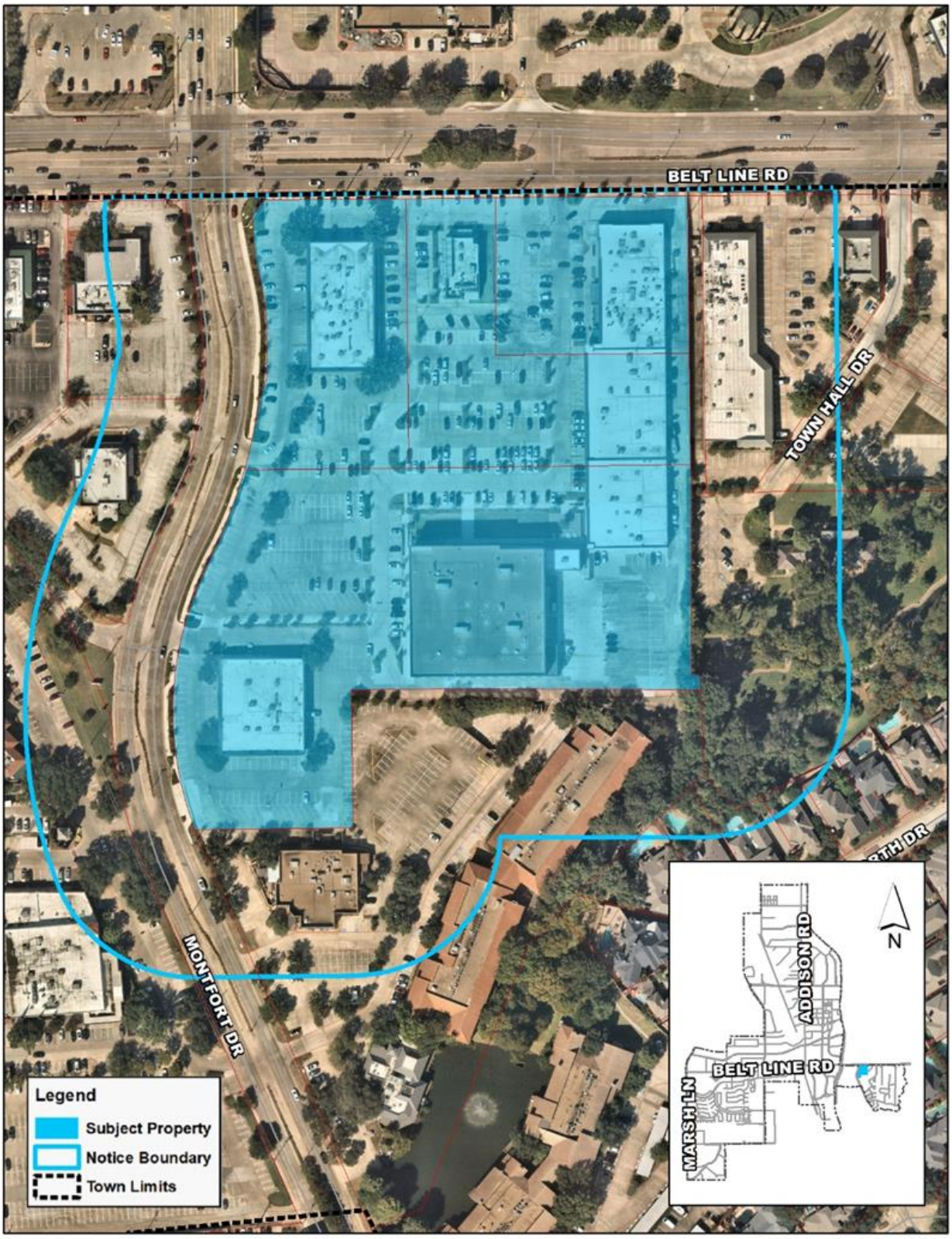
BELT LINE RD
TOWN HALL DR
MONTFORT DR
Legend
Subject Property
Notice Boundary
Town Limits
N
ADDISON RD
BELT LINE RD
MARSH LN

# EXHIBIT B

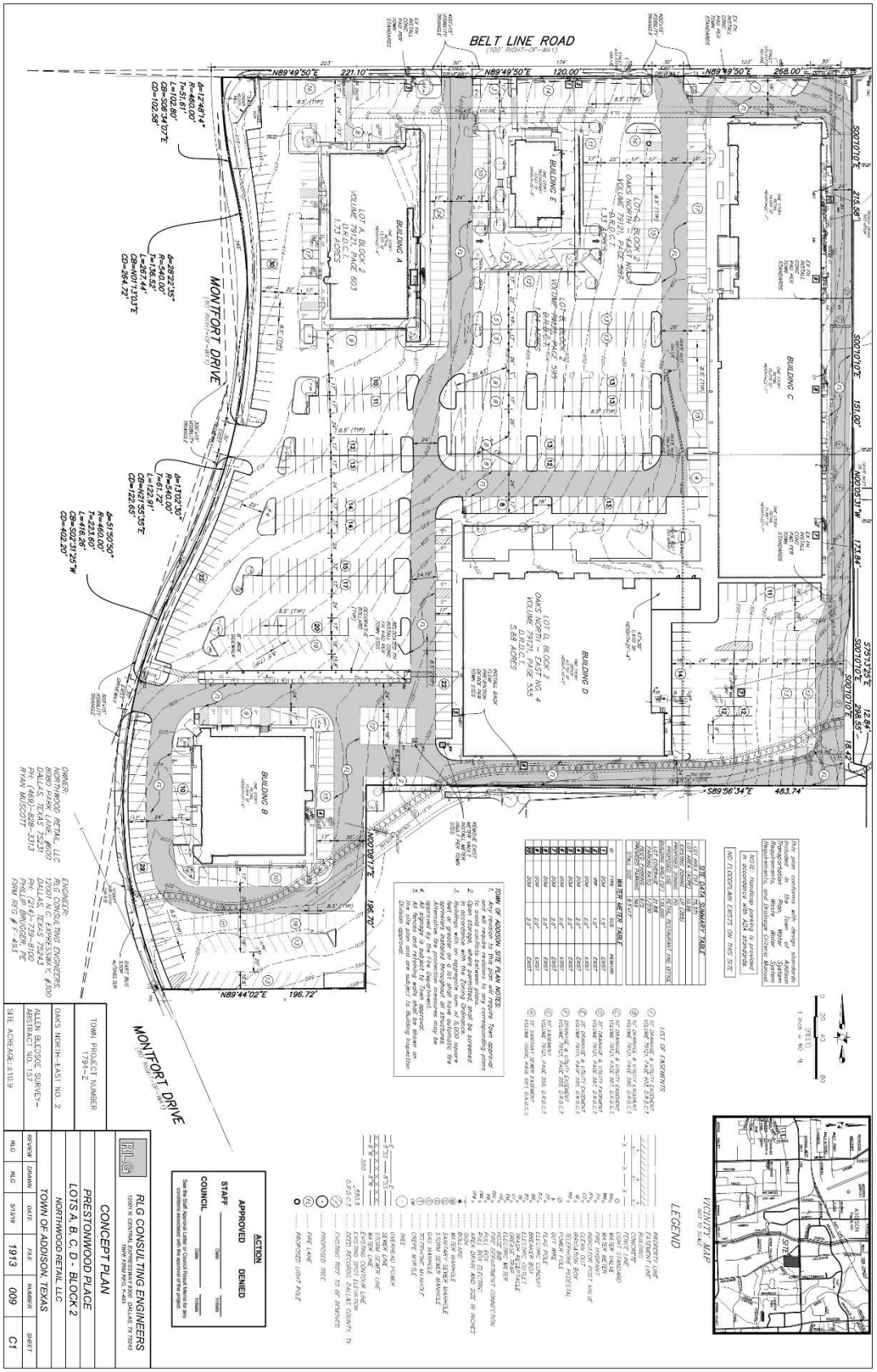
BELT LINE ROAD
MONTFORT DRIVE
MONTFORT DRIVE
BUILDING A
BUILDING B
BUILDING C
BUILDING D
BUILDING E
SITE
VICINITY MAP
LEGEND
SITE DATA SUMMARY TABLE
WATER METER TABLE
LIST OF EASEMENTS
TOWN OF ADDISON SITE PLAN NOTES:
CONCEPT PLAN
PRESTONWOOD PLACE
LOTS A, B, C, D - BLOCK 2
NORTHWOOD RETAIL, LLC
TOWN OF ADDISON, TEXAS
RLG CONSULTING ENGINEERS
ACTION
APPROVED
DENIED
STAFF
COUNCIL
TOWN PROJECT NUMBER 1791-Z
OAKS NORTH-EAST NO. 2
ALLEN BLEDSOE SURVEY~ ABSTRACT NO. 157
SITE ACREAGE: ±10.9

# EXHIBIT B

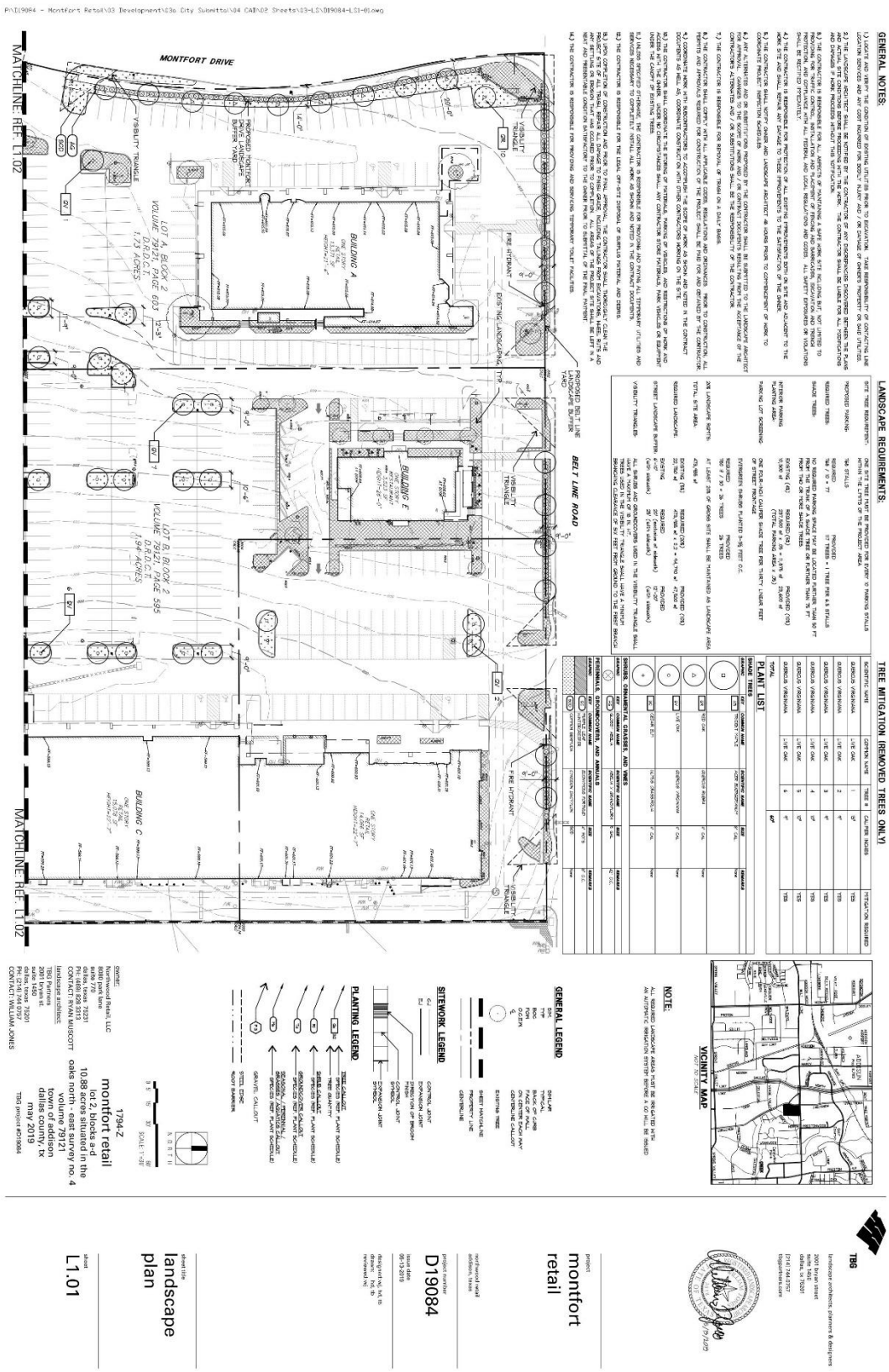
GENERAL NOTES:
LANDSCAPE REQUIREMENTS:
TREE MITIGATION (REMOVED TREES ONLY)
PLANT LIST
MONTFORT DRIVE
BELT LINE ROAD
MATCHLINE: REF. L1.02
VICINITY MAP
NOTE:
GENERAL LEGEND
SITEWORK LEGEND
PLANTING LEGEND
1794-Z
montfort retail
lot 2, blocks a-d
10.88 acres situated in the
oaks north - east survey no. 4
volume 79121
town of addison
dallas county, tx
may 2019
TBG project #D19084
TBG
landscape architects, planners & designers
montfort
retail
D19084
landscape
plan
L1.01

# EXHIBIT B

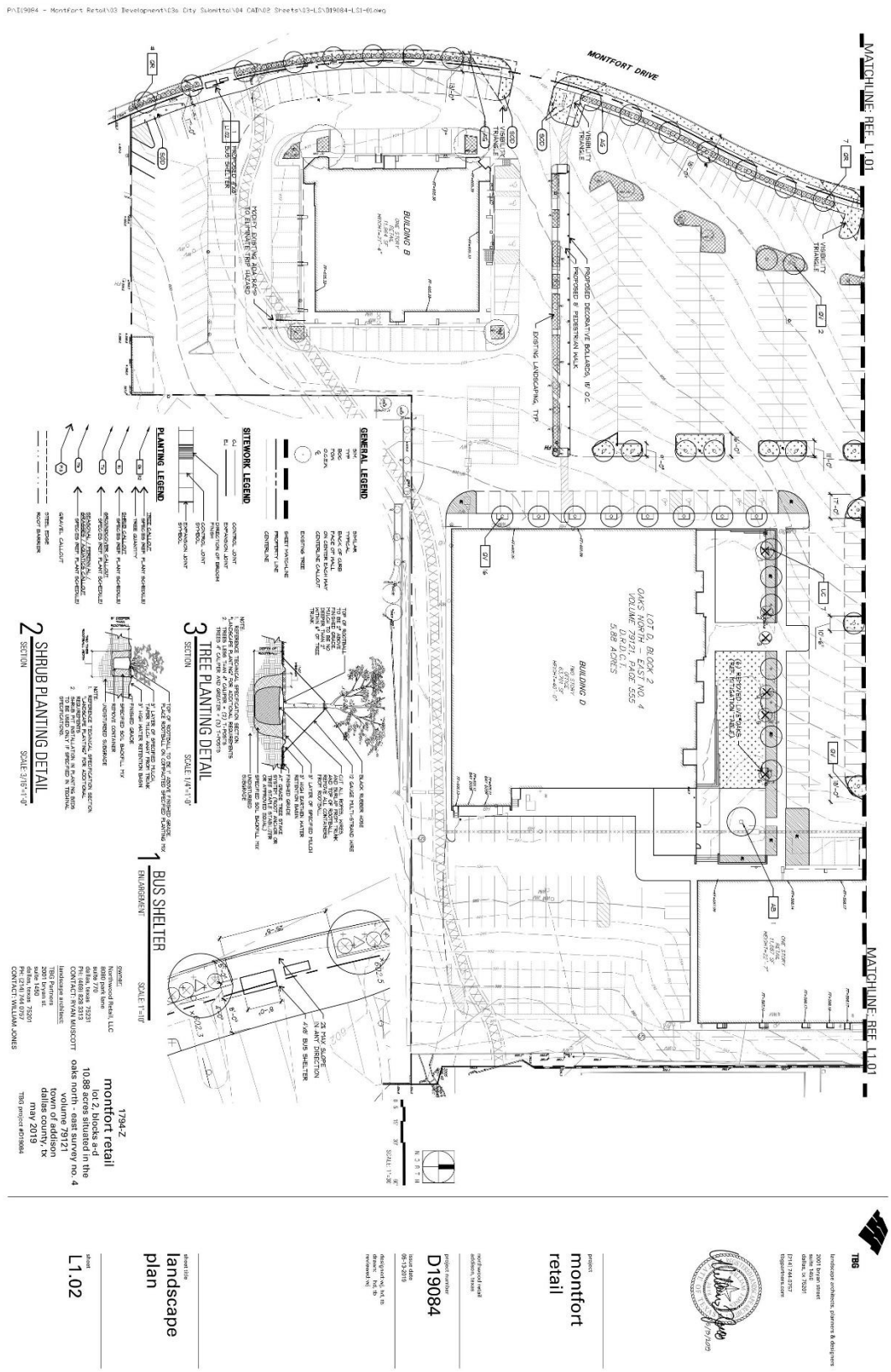
MONTFORT DRIVE
MATCHLINE: REF. L1.01
BUILDING B
BUILDING D
GENERAL LEGEND
SITEWORK LEGEND
PLANTING LEGEND
3 TREE PLANTING DETAIL
SECTION
2 SHRUB PLANTING DETAIL
SECTION
1 BUS SHELTER
ENLARGEMENT
1794-Z
montfort retail
lot 2, blocks a-d
10.88 acres situated in the
oaks north - east survey no. 4
volume 79121
town of addison
dallas county, tx
may 2019
TBG project #D19084
project
montfort
retail
D19084
landscape
plan
L1.02

# EXHIBIT B


MATERIAL LEGEND :
FACADE PLAN NOTES:
OWNER:
NORTHWOOD RETAIL, LLC
8080 PARK LANE, #600 DALLAS, TEXAS
75231
PH: (469)-828-3313
RYAN MUSCOTT
ARCHITECT:
MERRIMAN ANDERSON, ARCHITECTS
300 N. FIELD ST. DALLAS, TX 75202
PH: 214.987.1299
RYAN SCHUTT
TOWN PROJECT NUMBER
1794-Z
GRAPHIC SCALE
OAKS NORTH-EAST NO. 2
ALLEN BLEDSOE SURVEY-
ABSTRACT NO. 157
SITE ACREAGE:± 10.8 AC.
architects
maa
merriman
anderson
PRESTONWOOD PLACE
LOTS A, B, C, D - BLOCK 2
NORTHWOOD RETAIL, LLC
TOWN OF ADDISON, TEXAS
REVIEW
DRAWN
DATE
FILE
NUMBER
SHEET
RS
JDM
05-13-2019
A-5
COFFEE DRIP
GELATO
BURGER BURG
INTRODUCTION
GRAVE TASTE
EMERGE
STUDIUM
CORP

# EXHIBIT B

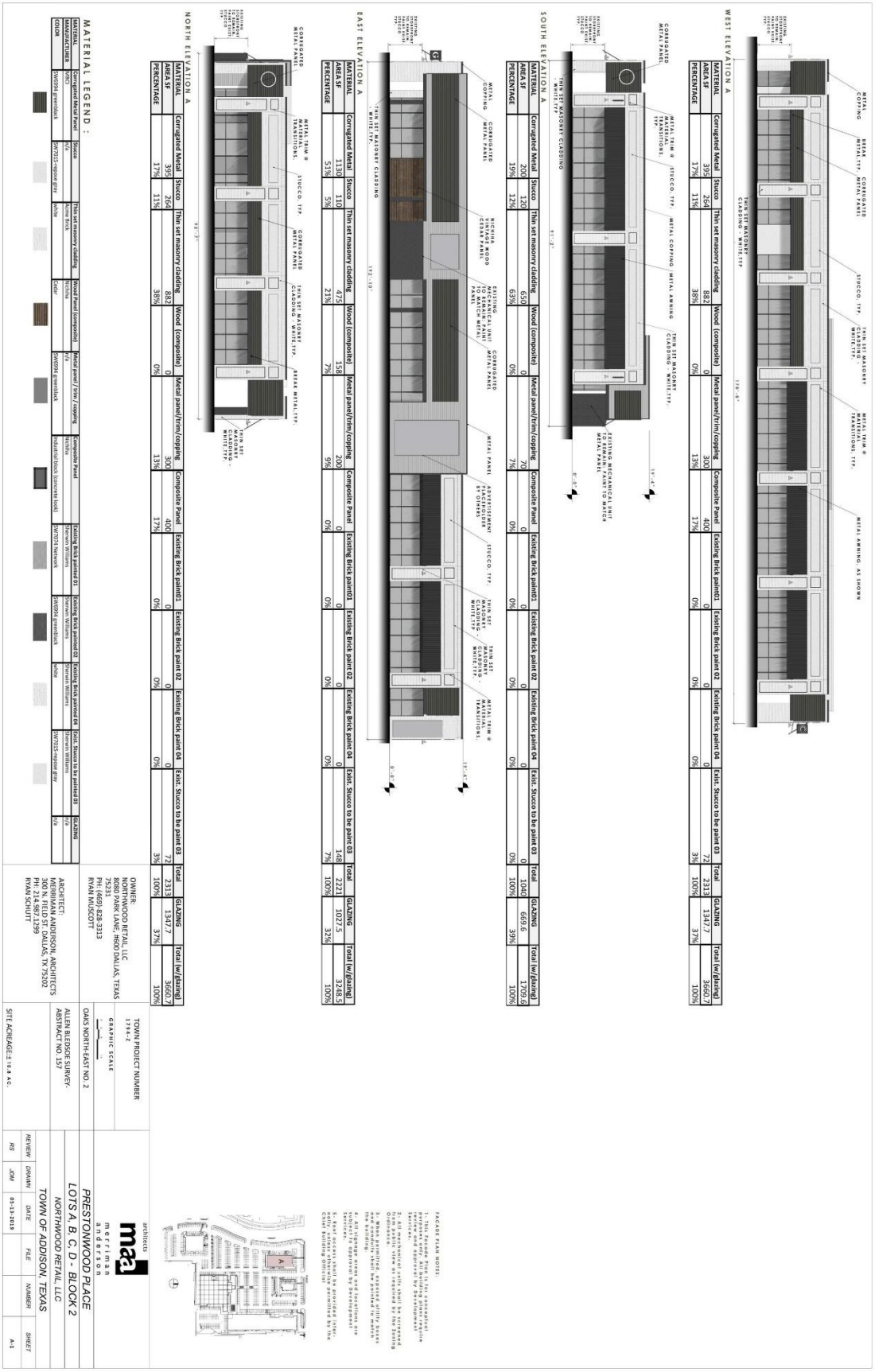


| WEST ELEVATION A | | | | | | | | | | | | | | |
|---|---|---|---|---|---|---|---|---|---|---|---|---|---|---|
| MATERIAL | Corrugated Metal | Stucco | Thin set masonry cladding | Wood (composite) | Metal panel/trim/coping | Composite Panel | Existing Brick paint01 | Existing Brick paint 02 | Existing Brick paint 04 | Exist. Stucco to be paint 03 | Total | GLAZING | Total (w/glazing) |
| AREA SF | 395 | 264 | 882 | 0 | 300 | 400 | 0 | 0 | 0 | 72 | 2319 | 1347.7 | 3660.7 |
| PERCENTAGE | 17% | 11% | 38% | 0% | 13% | 17% | 0% | 0% | 0% | 3% | 100% | 37% | 100% |

| SOUTH ELEVATION A | | | | | | | | | | | | | | |
|---|---|---|---|---|---|---|---|---|---|---|---|---|---|---|
| MATERIAL | Corrugated Metal | Stucco | Thin set masonry cladding | Wood (composite) | Metal panel/trim/coping | Composite Panel | Existing Brick paint01 | Existing Brick paint 02 | Existing Brick paint 04 | Exist. Stucco to be paint 03 | Total | GLAZING | Total (w/glazing) |
| AREA SF | 320 | 120 | 650 | 0 | 70 | 0 | 0 | 0 | 0 | 0 | 1040 | 669.5 | 1709.6 |
| PERCENTAGE | 19% | 12% | 63% | 0% | 7% | 0% | 0% | 0% | 0% | 0% | 100% | 39% | 100% |

| EAST ELEVATION A | | | | | | | | | | | | | | |
|---|---|---|---|---|---|---|---|---|---|---|---|---|---|---|
| MATERIAL | Corrugated Metal | Stucco | Thin set masonry cladding | Wood (composite) | Metal panel/trim/coping | Composite Panel | Existing Brick paint01 | Existing Brick paint 02 | Existing Brick paint 04 | Exist. Stucco to be paint 03 | Total | GLAZING | Total (w/glazing) |
| AREA SF | 1130 | 110 | 475 | 158 | 200 | 0 | 0 | 0 | 0 | 148 | 2221 | 1027.5 | 3248.5 |
| PERCENTAGE | 51% | 5% | 21% | 7% | 9% | 0% | 0% | 0% | 0% | 7% | 100% | 32% | 100% |

| NORTH ELEVATION A | | | | | | | | | | | | | | |
|---|---|---|---|---|---|---|---|---|---|---|---|---|---|---|
| MATERIAL | Corrugated Metal | Stucco | Thin set masonry cladding | Wood (composite) | Metal panel/trim/coping | Composite Panel | Existing Brick paint01 | Existing Brick paint 02 | Existing Brick paint 04 | Exist. Stucco to be paint 03 | Total | GLAZING | Total (w/glazing) |
| AREA SF | 395 | 264 | 882 | 0 | 300 | 400 | 0 | 0 | 0 | 72 | 2319 | 1347.7 | 3660.7 |
| PERCENTAGE | 17% | 11% | 38% | 0% | 13% | 17% | 0% | 0% | 0% | 3% | 100% | 37% | 100% |

| MATERIAL LEGEND : | | | | | | | | | | | |
|---|---|---|---|---|---|---|---|---|---|---|---|
| MATERIAL | Corrugated Metal Panel | Stucco | Thin set masonry cladding | Wood (composite) | Metal panel / trim / coping | Composite Panel | Existing Brick painted 01 | Existing Brick painted 02 | Existing Brick painted 04 | Exist. Stucco to be painted 03 | GLAZING |
| MANUFACTURER | Nichiha | | | | | | | | | | n/a |
| COLOR | SW7015 - repose gray | White | Color | Nichiha | SW7015 - repose gray | Industrial block (concrete look) | SW7015 Network | Sherwin Williams | SW7015 - repose gray | Sherwin Williams | n/a |

| REVIEW | DRAWN | DATE | FILE | NUMBER | SHEET |
|---|---|---|---|---|---|
| RS | JDM | 05-13-2019 | | | A-1 |

architects
merriman anderson

FACADE PLAN NOTES:
1. This facade plan is for conceptual review and approval by Development Services.
2. All mechanical units shall be screened from public view as required by the Zoning Ordinance.
3. All roof mounted equipment, utility boxes, and conduits shall be painted to match the building.
4. Address numbers must be provided (other, only unless otherwise permitted by the Code Building Official).
5. Roof access shall be provided (other, only unless otherwise permitted by the Code Building Official).

# EXHIBIT B



WEST ELEVATION B
SOUTH ELEVATION B
NORTH ELEVATION B
EAST ELEVATION B
MATERIAL LEGEND :
OWNER:
NORTHWOOD RETAIL, LLC
8080 PARK LANE, #600 DALLAS, TEXAS
75231
PH: (469)-828-3313
RYAN MUSCOTT
ARCHITECT:
MERRIMAN ANDERSON, ARCHITECTS
500 N. FIELD ST. DALLAS, TX 75202
PH: 214.987.1299
RYAN SCHUTT
TOWN PROJECT NUMBER
1794-Z
GRAPHIC SCALE
OAKS NORTH-EAST NO. 2
ALLEN BLEDSOE SURVEY-
ABSTRACT NO. 157
SITE ACREAGE: ± 10.8 AC.
PRESTONWOOD PLACE
LOTS A, B, C, D - BLOCK 2
NORTHWOOD RETAIL, LLC
TOWN OF ADDISON, TEXAS
REVIEW
DRAWN
DATE
FILE
NUMBER
SHEET
RS
JDM
05-13-2019
A-2

# EXHIBIT B

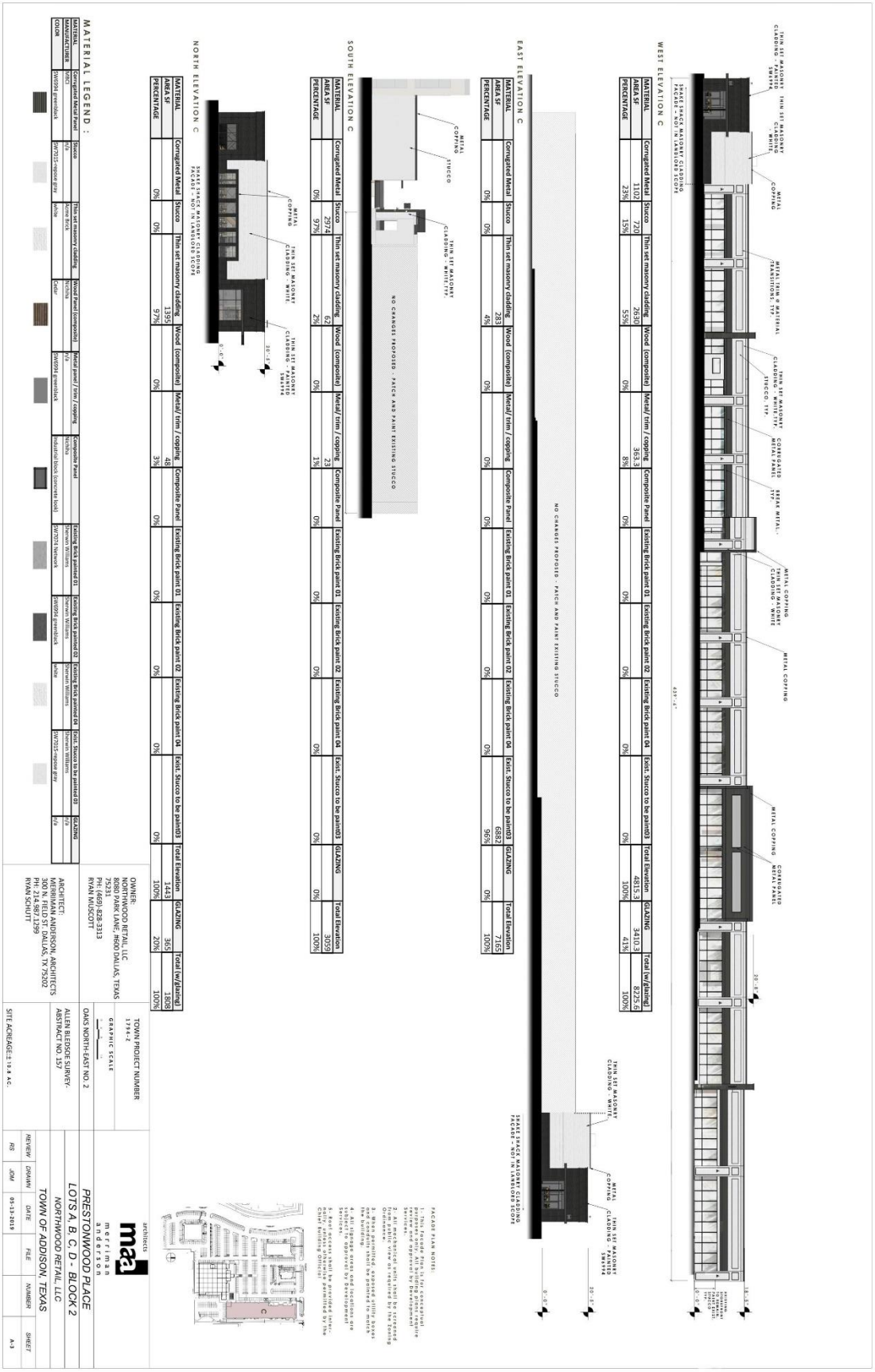

WEST ELEVATION C
EAST ELEVATION C
SOUTH ELEVATION C
NORTH ELEVATION C
MATERIAL LEGEND :
OWNER:
NORTHWOOD RETAIL, LLC
8080 PARK LANE, #600 DALLAS, TEXAS
75231
PH: (469)-828-3313
RYAN MUSCOTT
ARCHITECT:
MERRIMAN ANDERSON, ARCHITECTS
300 N. FIELD ST. DALLAS, TX 75202
PH: 214-987.1299
RYAN SCHUTT
TOWN PROJECT NUMBER
1794-Z
GRAPHIC SCALE
OAKS NORTH-EAST NO. 2
ALLEN BLEDSOE SURVEY-
ABSTRACT NO. 157
SITE ACREAGE: ± 10.8 AC.
PRESTONWOOD PLACE
LOTS A, B, C, D - BLOCK 2
NORTHWOOD RETAIL, LLC
TOWN OF ADDISON, TEXAS

# EXHIBIT B

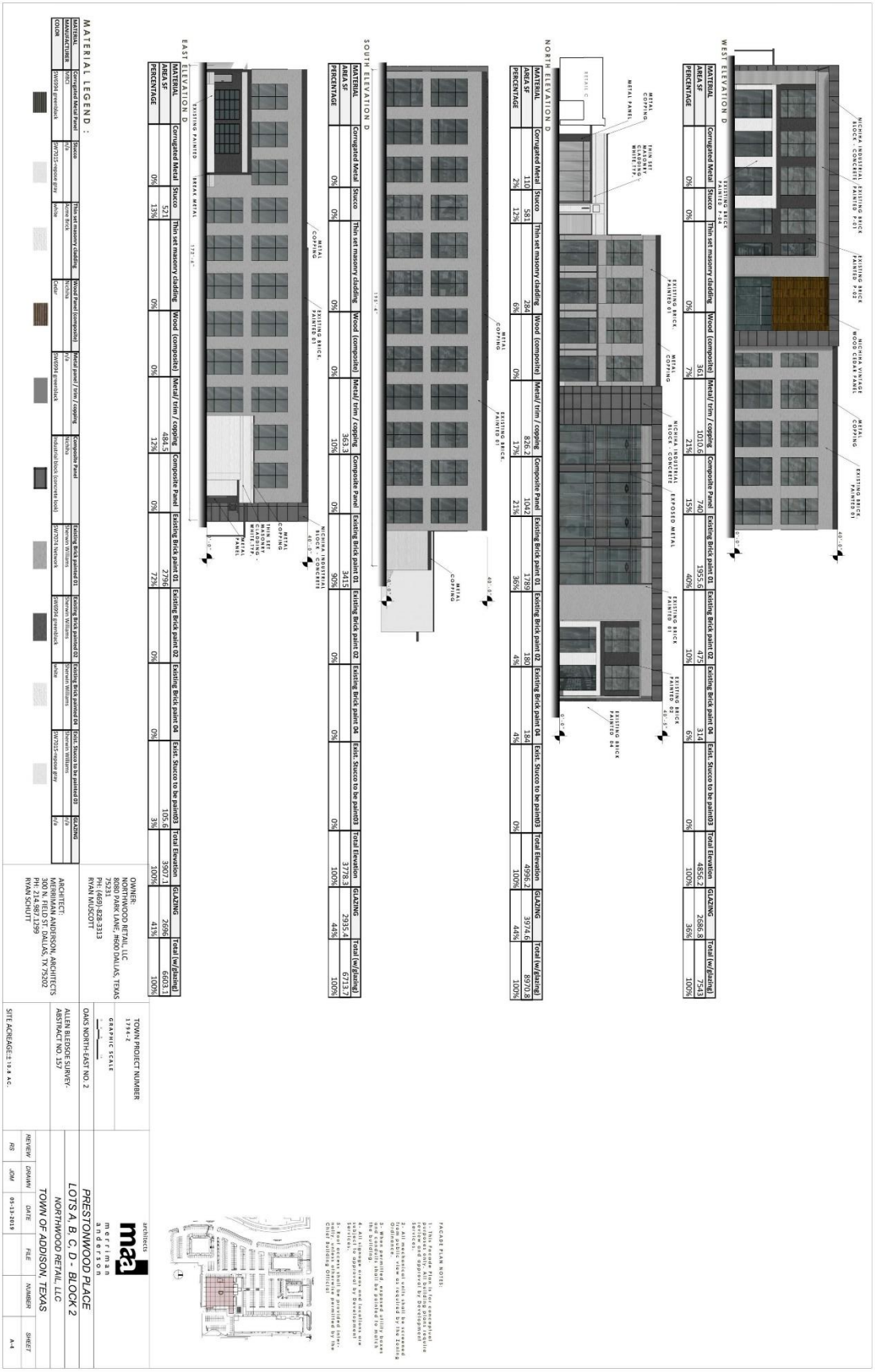

WEST ELEVATION D
NORTH ELEVATION D
SOUTH ELEVATION D
EAST ELEVATION D
MATERIAL LEGEND :
ARCHITECT:
MERRIMAN ANDERSON, ARCHITECTS
300 N. FIELD ST. DALLAS, TX 75202
PH: 214-987-1299
RYAN SCHUTT
OWNER:
NORTHWOOD RETAIL, LLC
8080 PARK LANE, #600 DALLAS, TEXAS
75231
PH: (469)-828-3313
RYAN MUSCOTT
TOWN PROJECT NUMBER
1794-Z
GRAPHIC SCALE
OAKS NORTH-EAST NO. 2
ALLEN BLEDSOE SURVEY-
ABSTRACT NO. 157
SITE ACREAGE: ± 10.8 AC.
PRESTONWOOD PLACE
LOTS A, B, C, D - BLOCK 2
NORTHWOOD RETAIL, LLC
TOWN OF ADDISON, TEXAS
REVIEW
DRAWN
DATE
FILE
NUMBER
SHEET
RS
JDM
05-13-2019
A-4

# 1844-Z

**PUBLIC HEARING** Case 1844-Z/Prestonwood Place. Hold a Public Hearing, Present, Discuss, and Consider Action on an Ordinance Amending Planned Development (PD) District Ordinance O19-22 for a 10.88-Acre property Located at the southeast corner of Belt Line Road and Montfort Drive in order to Modify Use Regulations by allowing Medical Office as a Permitted Use.

## LOCATION MAP

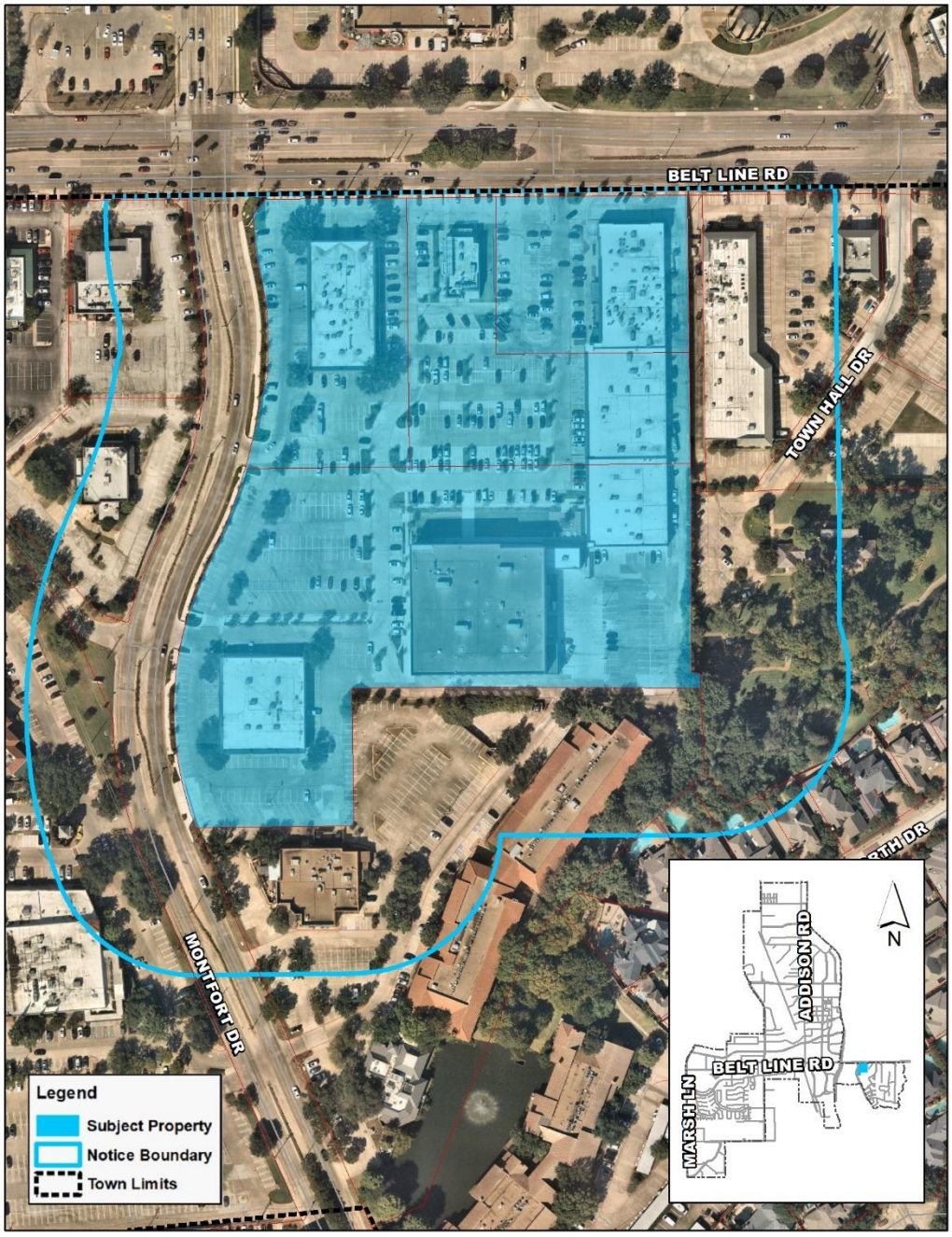

December 16, 2021

**STAFF REPORT**

| | |
|---|---|
| RE: | 1844-Z/Prestonwood Place |
| LOCATION: | Southeast corner of Belt Line Road and Montfort Drive |
| REQUEST: | Approval of a request to amend Planned Development (PD) District Ordinance O19-22 to modify use regulations by allowing medical office as a permitted use. |
| APPLICANT: | James Kratochvil, Burnham Nationwide |

DISCUSSION:

Background: This request is specific to Prestonwood Place, a restaurant anchored shopping center situated on a 10.88-acre property located at the southeast corner of Belt Line Road and Montfort Drive.

On June 11, 2019, City Council approved the rezoning of the property to Planned Development (PD) District, through Ordinance O19-22. This rezoning allowed for façade improvements to all existing buildings, landscape and pedestrian improvements throughout the site, and extensive improvements to Building D (home to Catapult Health, La La Land Kind Café, and Mendocino Farms). This PD District is based on the Local Retail (LR) District standards with modification to parking standards, establishing a mixed-use development parking ratio of one space per 200 square feet of building floor area (1/200).

A potential tenant, One Medical, which is a membership-based primary care practice, is considering occupying a tenant space at the northeast quadrant of the center. This business is somewhat unique, in that they tend to locate in vibrant retail and mixed-use areas like Prestonwood Place, as opposed to free-standing medical office sites. As this site is currently zoned, this is not possible, as medical office is not a permitted use in this PD District. Therefore, a request to amend the PD to permit a medical office use in the Prestonwood Place shopping center has been presented for Town consideration.

Proposed Amendment: This request is to amend the PD by including medical office as a permitted use. The Development Plan adopted with Ordinance O19-22 would not be modified by this request.

The intent of the LR District, the base zoning district for this PD, is to provide a mix of services for the Town and nearby residents located along major roadways to maximize accessibility. Uses within this district consist of local shopping facilities that provide retail business service and office

spaces. The LR district is also one of the primary districts where restaurants exist and are permitted through the Special Use Permit (SUP) process.

The Town's zoning ordinance defines medical office as "an office for the examination and treatment of outpatients, including dental examinations and treatments." Medical office use is a complementary use to other service-type establishments allowed within the LR District.

As part of the draft Unified Development Code (UDC), medical clinic is proposed to be a permitted use in most nonresidential zoning districts. Although the UDC is still an on-going, active project that has not yet been adopted, this request aligns with the current direction of the UDC project. Additionally, the Town's Comprehensive Plan notes that the success of retail land uses is impacted by the constant change in demand by the shopping public. Therefore, reinvestment and reinvention of Belt Line Road should be focused on maintaining a healthy inventory of compatible and viable uses.

With the current tenant mix at Prestonwood Place, restaurants anchor the project, with remaining uses encompassing a range of health and wellness oriented businesses, a health technology business, and a previously established medical office use (Planned Parenthood).

A medical office use such as One Medical would be compatible with these surrounding businesses.

RECOMMENDATION: **APPROVAL**

The proposed amendment would allow opportunity for a new type of service in Prestonwood Place, adding to the mix of services for Town residents and employers. Additionally, this amendment would be in line with the Town's long-term goals and vision to allow for compatible land uses to continue the reinvestment in existing retail centers, specifically along Belt Line Road.

Staff recommends approval of the request.

.

Case 1844-Z/Prestonwood Place

December 21, 2021

COMMISSION FINDINGS:

The Addison Planning and Zoning Commission, meeting in regular session on December 21, 2021, voted to recommend approval of an ordinance amending Planned Development (PD) District Ordinance O19-22 for a 10.88-acre property located at the southeast corner of Belt Line Road and Montfort Drive, in order to modify use regulations by allowing medical office as a permitted use, subject to the following condition:

- The property may be used for medical office uses providing non-emergency services, open and operational no longer than 18 hours on any given day.

Voting Aye: Catalani, Craig, DeFrancisco, Fansler, Meleky, Resnik, Souers
Voting Nay: none
Absent: none

SPEAKERS AT THE PUBLIC HEARING:

For: none
On: none
Against: none

**Council Meeting** **14.**

**Meeting Date:** 01/11/2022

**Department:** Development Services

---

**AGENDA CAPTION:**

Hold a Public Hearing, Present, Discuss, and Consider Action on an **Ordinance for Property Located at 5294 Belt Line Road, Suite 110, Currently Zoned Planned Development (PD) Through Ordinance O19-022, for a Special Use Permit (SUP) to Allow a Restaurant**. Case 1845-SUP/5294 Belt Line Road, Suite 110 (La La Land Kind Café).

**BACKGROUND:**

The Addison Planning and Zoning Commission, meeting in regular session on December 21, 2021, voted to recommend approval of an ordinance changing the zoning on property located at 5294 Belt Line Road, Suite 110, currently zoned Planned Development (PD), through Ordinance O19-22, by approving a Special Use Permit (SUP) for a restaurant.

Voting Aye: Catalani, Craig, DeFrancisco, Fansler, Meleky, Resnik, Souers
Voting Nay: none
Absent: none

SPEAKERS AT THE PUBLIC HEARING:

For: none
On: none
Against: none

Please refer to the Staff Report for additional details.

**RECOMMENDATION:**

Administration recommends approval.

---

**Attachments**

1845-SUP Presentation
1845-SUP Ordinance
1845-SUP Staff Report
1845-SUP Plans

---

# La La Land Kind Café Special Use Permit (1845-SUP)

# Case 1845-SUP La La Land Kind Café

**LOCATION:**

5294 Belt Line Road, Suite 110

**REQUEST:**

Approval of a Special Use Permit for a restaurant to permit a new café.

**ACTION REQUIRED:**

Discuss, and consider action on a recommendation to allow a restaurant on the subject property.

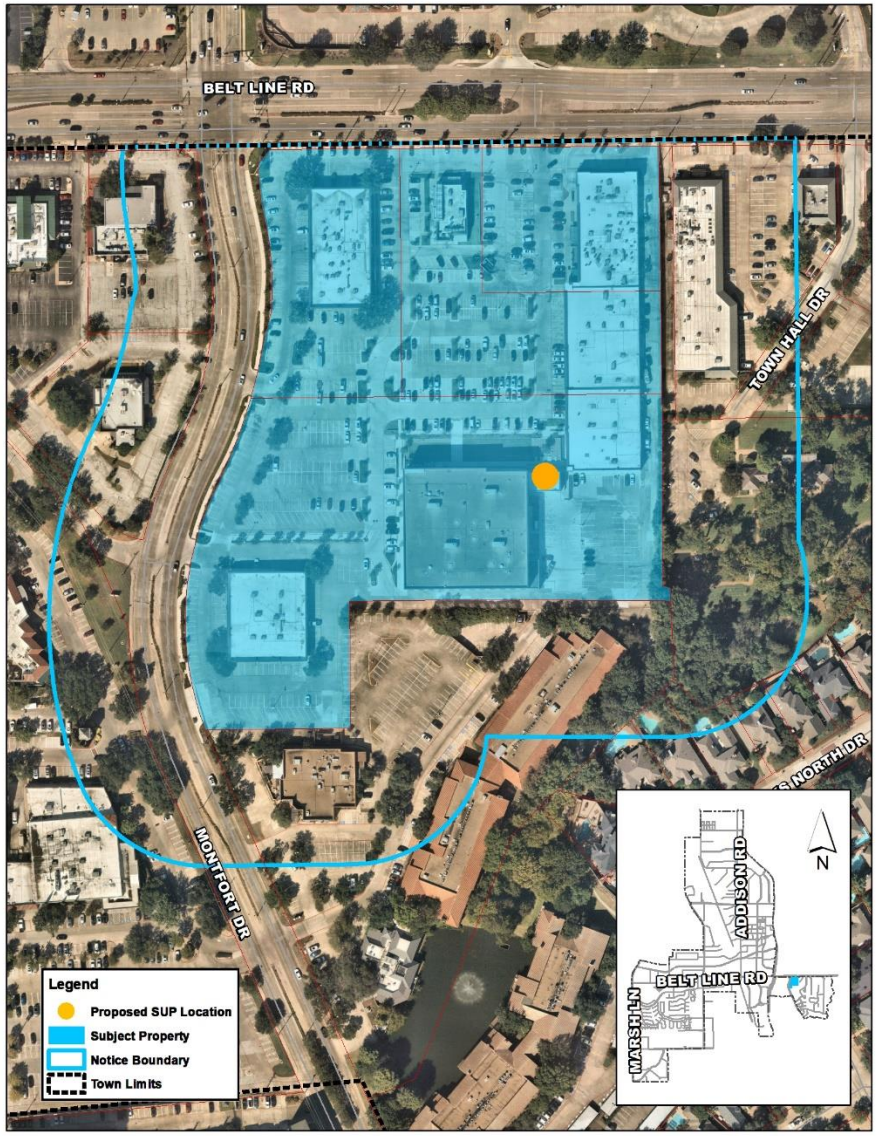

# Case 1845-SUP La La Land Kind Café

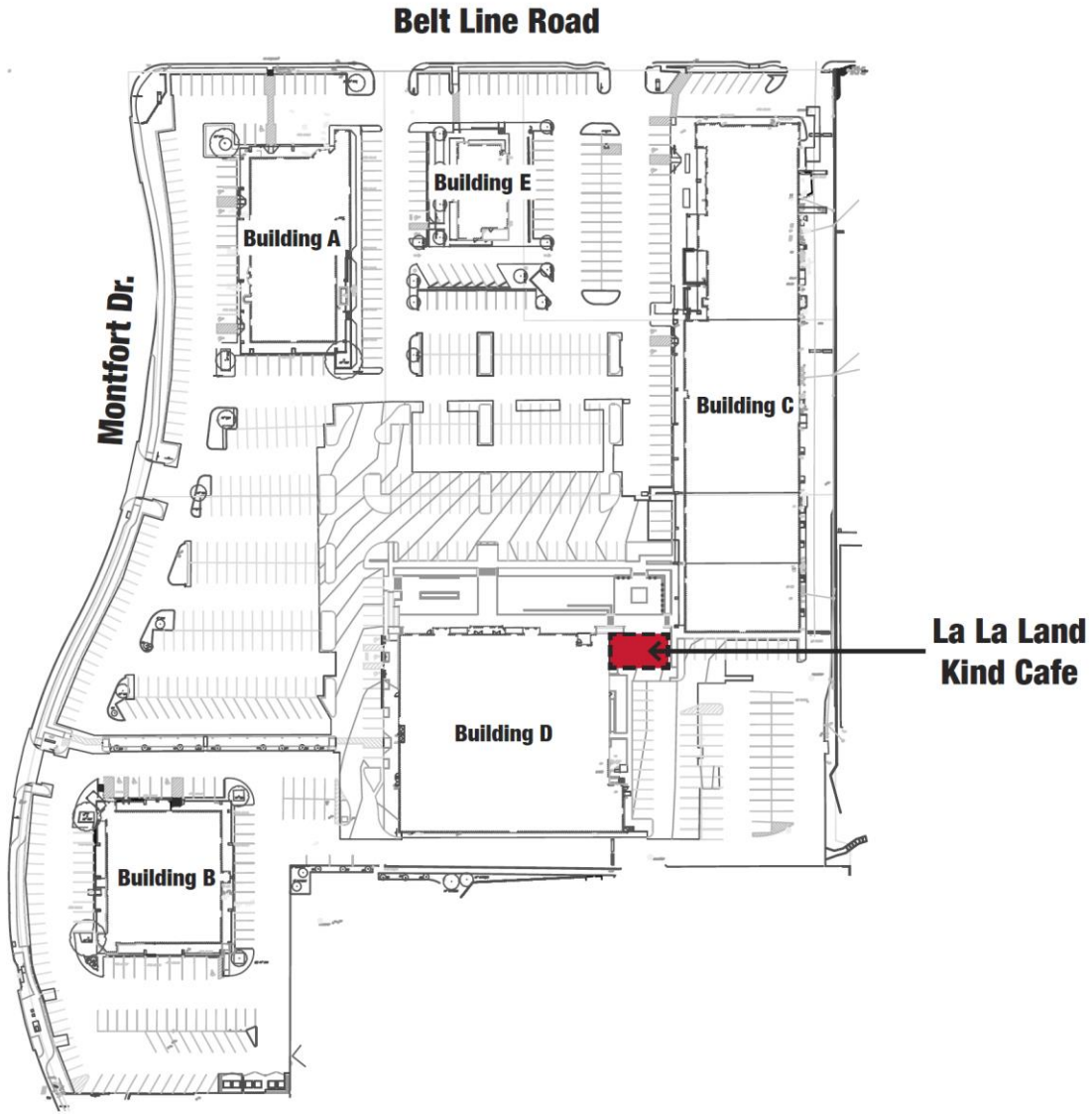


## PROJECT HISTORY:

June 2019 – Rezoned to PD to support reinvestment within the Prestonwood Place shopping center

Present – Finish out of vacant space to accommodate La La Land Kind Café

Restaurant is currently operating under a TCO, subject to review and action on this SUP application

# Case 1845-SUP La La Land Kind Café

**Restaurant Use:**

- 1,295 SF of interior floor area
- 227 SF of outdoor seating area
- Seating for 12 indoors
- Seating for 8 outdoors

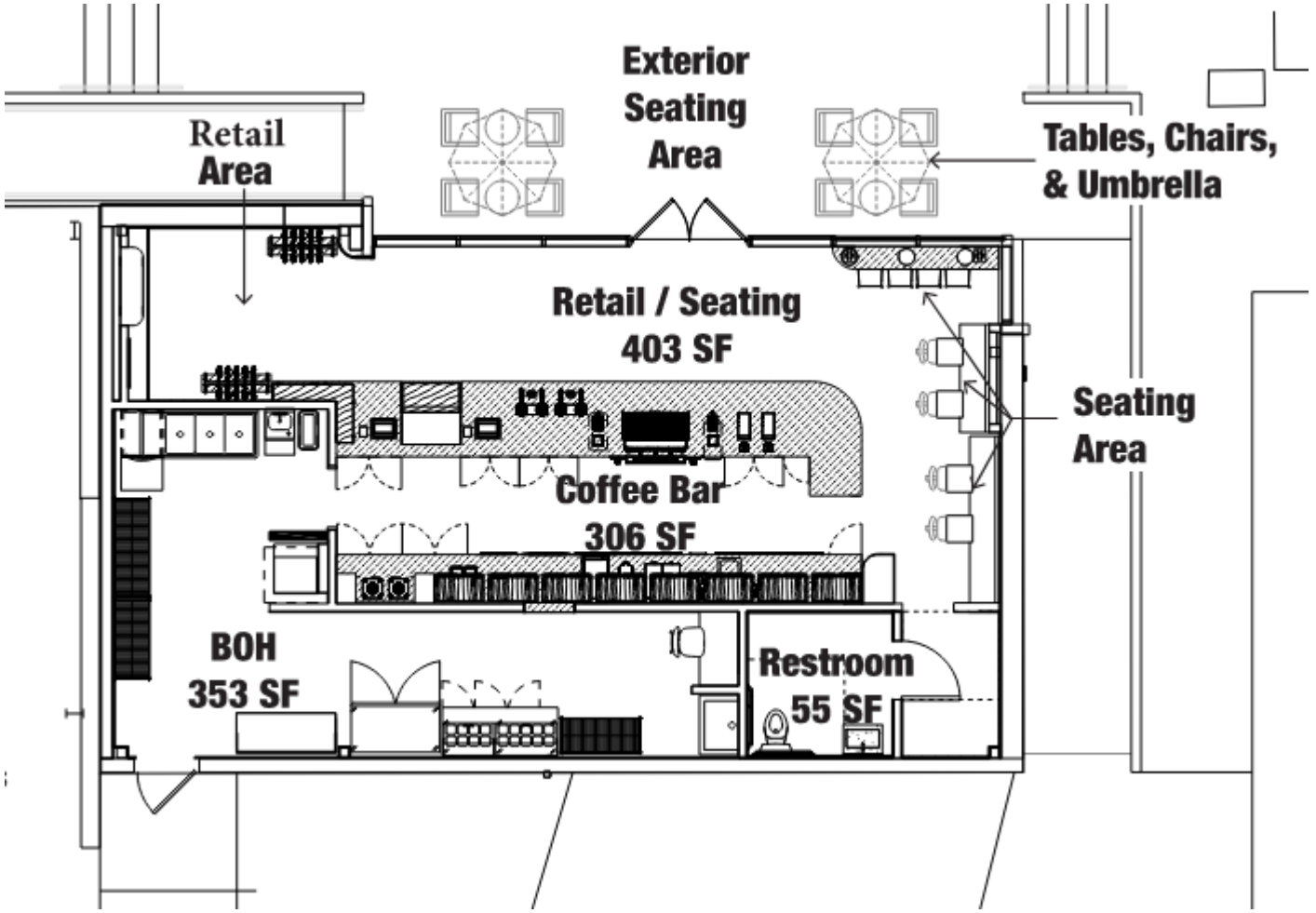

# Case 1845-SUP La La Land Kind Café

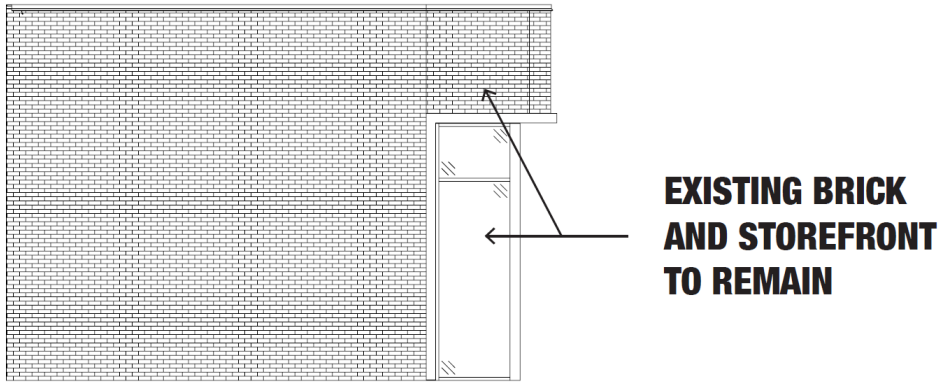


EAST ELEVATION

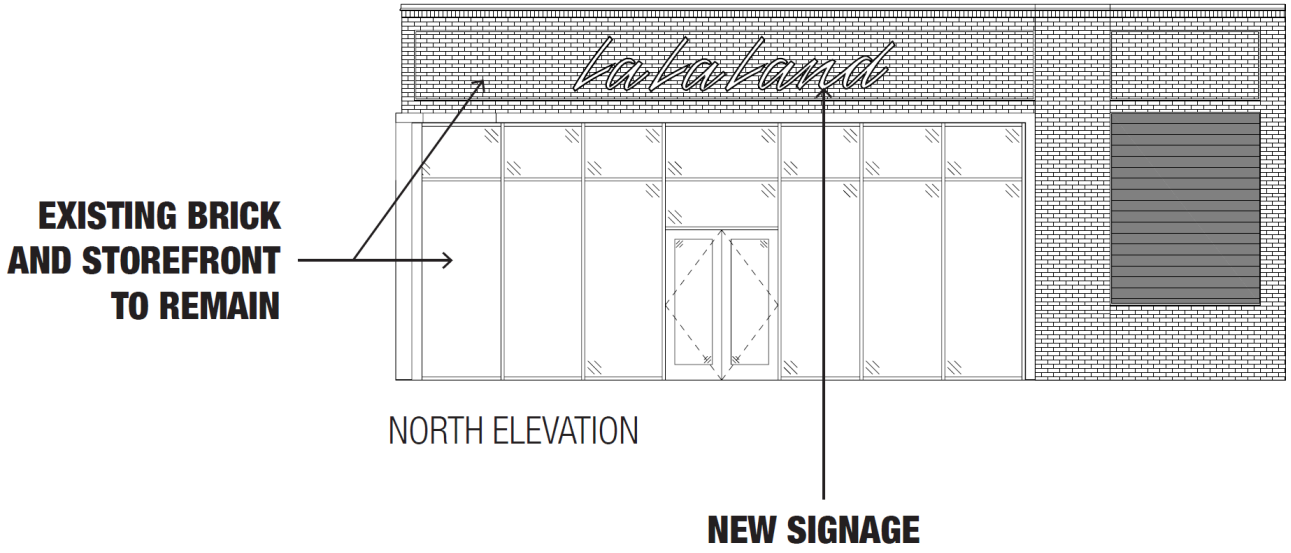


NORTH ELEVATION

## PARKING:

Site exceeds required parking by 93 spaces

## OPEN SPACE AND LANDSCAPE:

Site complies with landscape requirements of the PD

## EXTERIOR APPEARANCE:

Façade renovations completed with the overall building improvements; signage added to the facade

# Case 1845-SUP La La Land Kind Café

**PUBLIC NOTICE:**

Notice of public hearing was provided to property owners within 200 feet of the subject property in accordance with Town and State law

**NOTICE RECIPIENTS:** 18.

**FOR:** None.
**AGAINST:** None.
**NEUTRAL:** None.

**PLANNING & ZONING COMMISSION ACTION**

Approval: 7 – 0

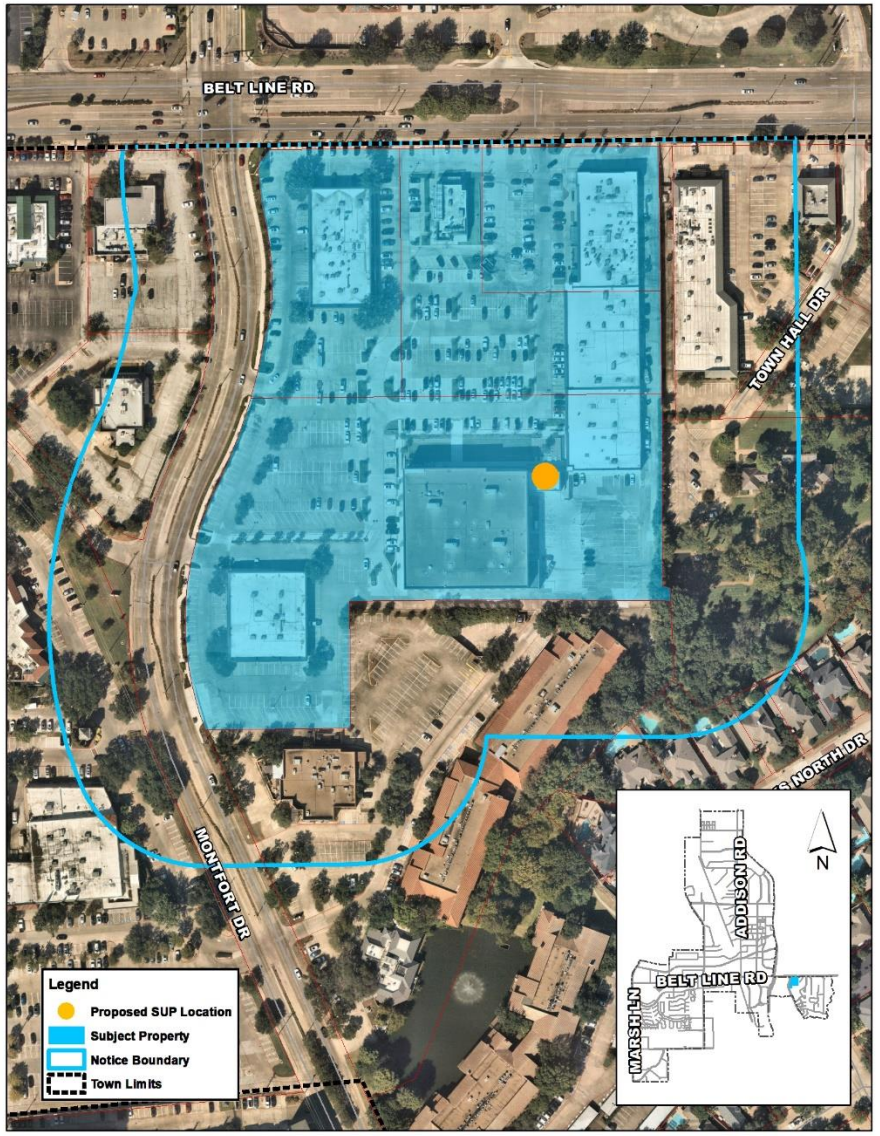

# Case 1845-SUP La La Land Kind Café

**RECOMMENDATION:**

Staff recommends **approval of the request.**

**ORDINANCE NO. _____**

**AN ORDINANCE OF THE TOWN OF ADDISON, TEXAS, AMENDING THE COMPREHENSIVE ZONING ORDINANCE BY GRANTING A SPECIAL USE PERMIT (SUP) FOR A RESTAURANT FOR THE PROPERTY LOCATED AT 5294 BELT LINE ROAD, SUITE 110; PROVIDING A PENALTY NOT TO EXCEED TWO THOUSAND DOLLARS ($2,000.00) FOR EACH OFFENSE; PROVIDING A SAVINGS CLAUSE, SEVERABILITY CLAUSE, AND AN EFFECTIVE DATE.**

**WHEREAS**, at its regular meeting held on December 21, 2021, the Planning & Zoning Commission considered and made recommendations on a request for a Special Use Permit (Case No.1845-SUP) for a restaurant at the property located at 5294 Belt Line Road, Suite 110 (the "Subject Property"); and

**WHEREAS**, the Subject Property is zoned PD, Planned Development, through Ordinance No. O19-22; and

**WHEREAS,** this change of zoning is in conformance with the adopted Comprehensive Plan of the Town of Addison, as amended; and

**WHEREAS**, after due deliberations and consideration of the recommendation of the Planning and Zoning Commission, the information received at a public hearing, and other relevant information and materials, the City Council of the Town of Addison, Texas finds that this amendment promotes the general welfare and safety of this community.

**NOW THEREFORE, BE IT ORDAINED BY THE CITY COUNCIL OF THE TOWN OF ADDISON, TEXAS:**

**SECTION 1.** The recitals and findings set forth above are hereby found to be true and correct and incorporated as if fully set forth herein.

**SECTION 2.** A Special Use Permit authorizing a restaurant on the Subject Property is hereby granted subject to the following conditions:

(a) Prior to the issuance of a Certificate of Occupancy, the Subject Property shall be improved in accordance with the site plan, floor plan, and building elevations, which are attached hereto as **Exhibit A** and made a part hereof for all purposes.

(b) The Special Use Permit (SUP) granted herein for a restaurant, shall be limited to that particular area designated on the final site plan as encompassing a total area not to exceed 1,522 square feet.

(c) If the Subject Property is not used for the purposes for which said permits were granted within one (1) year after the adoption of this ordinance, the City Council may authorize hearings to be held for the purpose of considering a change of zoning and repeal of the Special Use Permit granted herein.

**SECTION 3.** Any person, firm, or corporation violating any of the provisions or terms of this ordinance shall be subject to the same penalty as provided for in the Comprehensive Zoning Ordinance of the city, as heretofore amended, and upon conviction shall be punished by a fine set in accordance with Chapter 1, Section 1-7 of the Code of Ordinances for the Town of Addison.

**SECTION 4.** It is the intention of the City Council that this ordinance be considered in its entirety, as one ordinance, and should any portion of this ordinance be held to be void or unconstitutional, then said ordinance shall be void in its entirety, and the City Council would not have adopted said ordinance if any part or portion of said ordinance should be held to be unconstitutional or void.

**SECTION 5.** All ordinances of the City in conflict with the provisions of this ordinance be, and the same are hereby repealed and all other ordinances of the City not in conflict with the provisions of this ordinance shall remain in full force and effect.

**SECTION 6.** This Ordinance shall become effective from and after its passage and approval and after publication as may be required by law or by the City Charter.

**PASSED AND APPROVED** by the City Council of the Town of Addison, Texas, on this the ***11TH*** day of ***JANUARY 2022*****.**

**TOWN OF ADDISON, TEXAS**

_____
Joe Chow, Mayor

**ATTEST:**

_____
Irma Parker, City Secretary

**APPROVED AS TO FORM:**

_____
Whitt Wyatt, City Attorney

# EXHIBIT A




Vicinity Map (NTS)

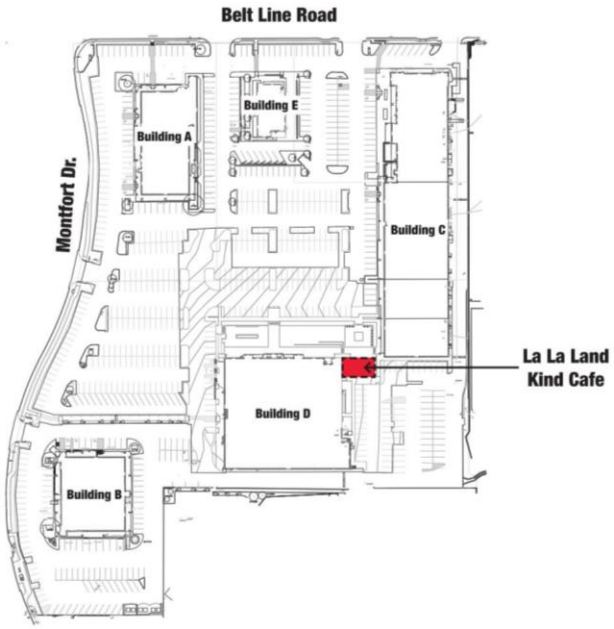


**Site Data**

**Lot Area -** 75,571 SF (10.88 AC)
**Existing Zoning -** Planned Development (PD) District 019-22
**Total Building Area** - 135,000 SF
**Parking Ratio** - 1 space / 200 SF
**Required Parking -** 675
**Provided Parking** - 768

| Property Owner | Applicant | Compiled By | Legal Description & Address |
|---|---|---|---|
| Northwood Retail, LLC<br>8080 Park Lane, Suite 600<br>Dallas, TX 75231<br>469.828.3313<br>Ryan Muscott | La La Land Kind Cafe<br>10505 Shady Trail<br>Dallas, TX 75220<br>972.741.0868<br>Dario Ferdows | ZMOWERY Architecture<br>550 Reserve Street, Suite 190<br>Southlake, TX 76092<br>817.223.2804<br>Zac Mowery | Prestonwood Place Lots A,B,C,&,D, BLOCK 2,<br>5294 Belt Line Road Suite 110<br>**Town Project Number**<br>1845-SUP |

**SUP SITE PLAN**

N

0 50' 100' 200'
1" = 100'-0"

# EXHIBIT A

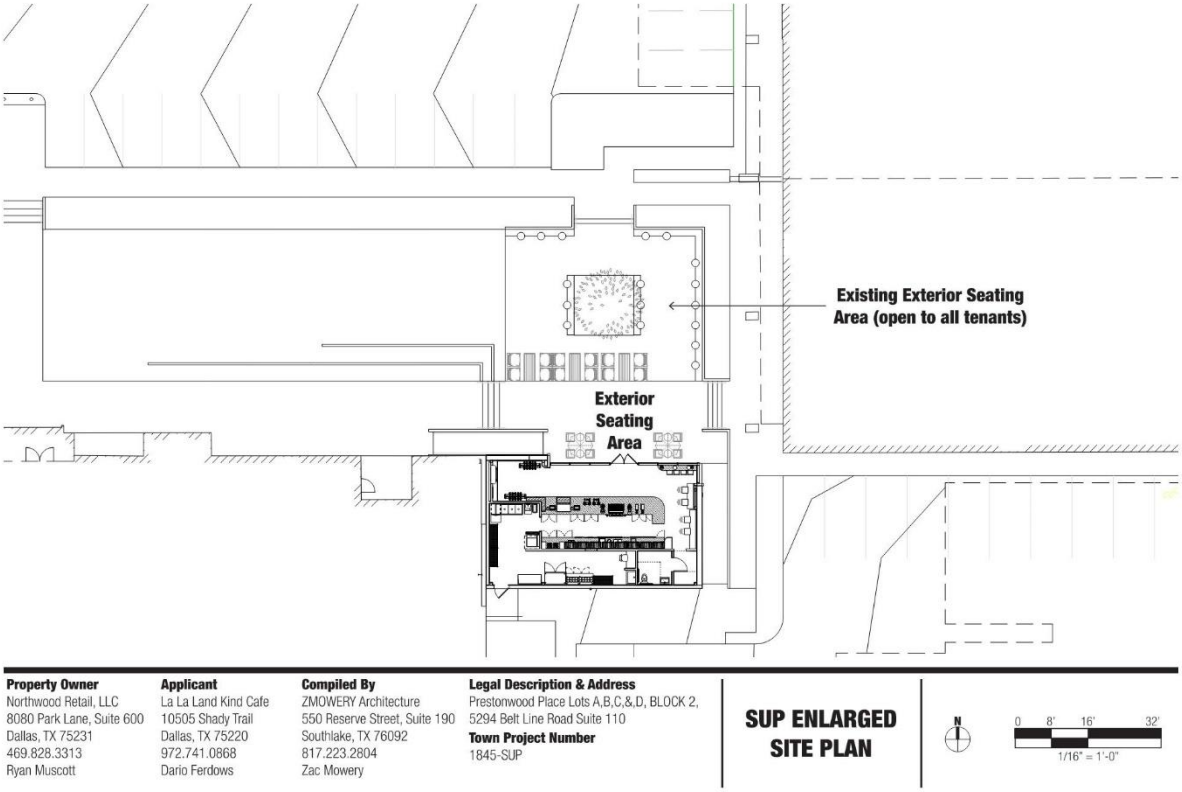


**Property Owner**
Northwood Retail, LLC
8080 Park Lane, Suite 600
Dallas, TX 75231
469.828.3313
Ryan Muscott

**Applicant**
La La Land Kind Cafe
10505 Shady Trail
Dallas, TX 75220
972.741.0868
Dario Ferdows

**Compiled By**
ZMOWERY Architecture
550 Reserve Street, Suite 190
Southlake, TX 76092
817.223.2804
Zac Mowery

**Legal Description & Address**
Prestonwood Place Lots A,B,C,&,D, BLOCK 2,
5294 Belt Line Road Suite 110
**Town Project Number**
1845-SUP

**SUP ENLARGED SITE PLAN**

N

0 8' 16' 32'
1/16" = 1'-0"

# EXHIBIT A

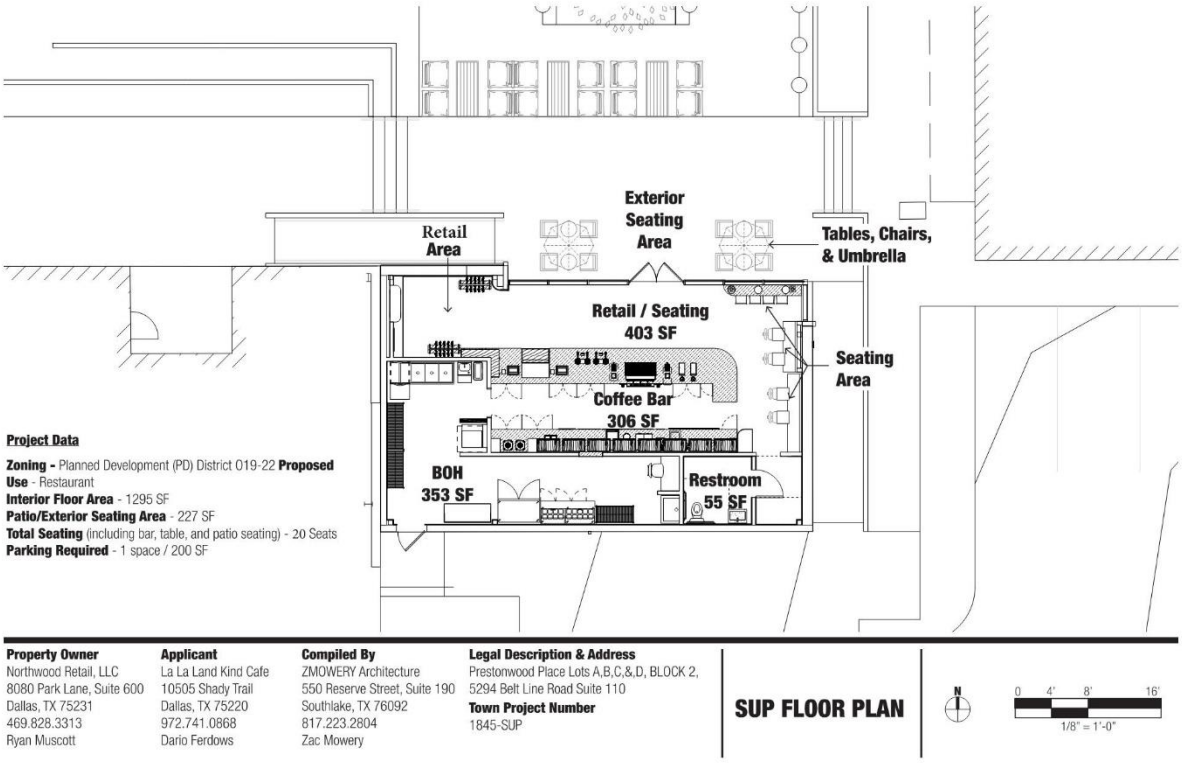
Retail Area
Exterior Seating Area
Tables, Chairs, & Umbrella
Retail / Seating 403 SF
Seating Area
Coffee Bar 306 SF
BOH 353 SF
Restroom 55 SF
Project Data
Zoning - Planned Development (PD) District 019-22 Proposed Use - Restaurant
Interior Floor Area - 1295 SF
Patio/Exterior Seating Area - 227 SF
Total Seating (including bar, table, and patio seating) - 20 Seats
Parking Required - 1 space / 200 SF
Property Owner
Northwood Retail, LLC
8080 Park Lane, Suite 600
Dallas, TX 75231
469.828.3313
Ryan Muscott
Applicant
La La Land Kind Cafe
10505 Shady Trail
Dallas, TX 75220
972.741.0868
Dario Ferdows
Compiled By
ZMOWERY Architecture
550 Reserve Street, Suite 190
Southlake, TX 76092
817.223.2804
Zac Mowery
Legal Description & Address
Prestonwood Place Lots A,B,C,&D, BLOCK 2,
5294 Belt Line Road Suite 110
Town Project Number
1845-SUP
SUP FLOOR PLAN
N
0 4' 8' 16'
1/8" = 1'-0"

# EXHIBIT A

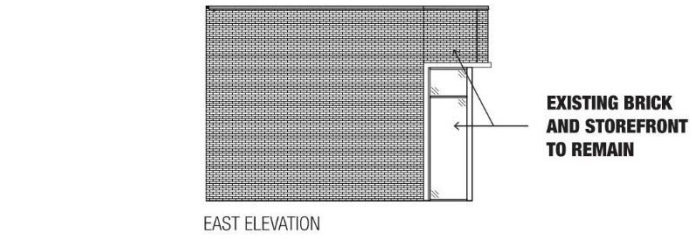


EAST ELEVATION

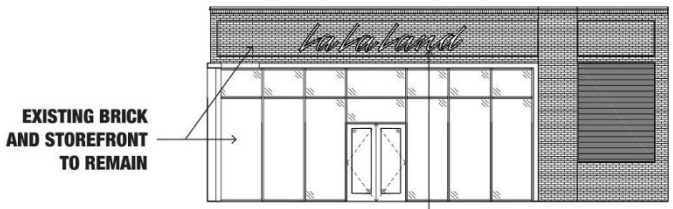


NORTH ELEVATION

| Property Owner | Applicant | Compiled By | Legal Description & Address |
|---|---|---|---|
| Northwood Retail, LLC<br>8080 Park Lane, Suite 600<br>Dallas, TX 75231<br>469.828.3313<br>Ryan Muscott | La La Land Kind Cafe<br>10505 Shady Trail<br>Dallas, TX 75220<br>972.741.0868<br>Dario Ferdows | ZMOWERY Architecture<br>550 Reserve Street, Suite 190<br>Southlake, TX 76092<br>817.223.2804<br>Zac Mowery | Prestonwood Place Lots A,B,C,&,D, BLOCK 2,<br>5294 Belt Line Road Suite 110<br>**Town Project Number**<br>1845-SUP |

**SUP BUILDING ELEVATIONS**

0 4' 8' 16'
1/8" = 1'-0"

# 1845-SUP

**PUBLIC HEARING** Case 1845-SUP/5294 Belt Line Road, Suite 110 (La La Land Kind Café). Hold a Public Hearing, Present, Discuss, and Consider Action on an Ordinance for Property Located at 5294 Belt Line Road, Suite 110, currently Zoned Planned Development (PD) through Ordinance O19-022, for a Special Use Permit (SUP) to allow a Restaurant.

**LOCATION MAP**

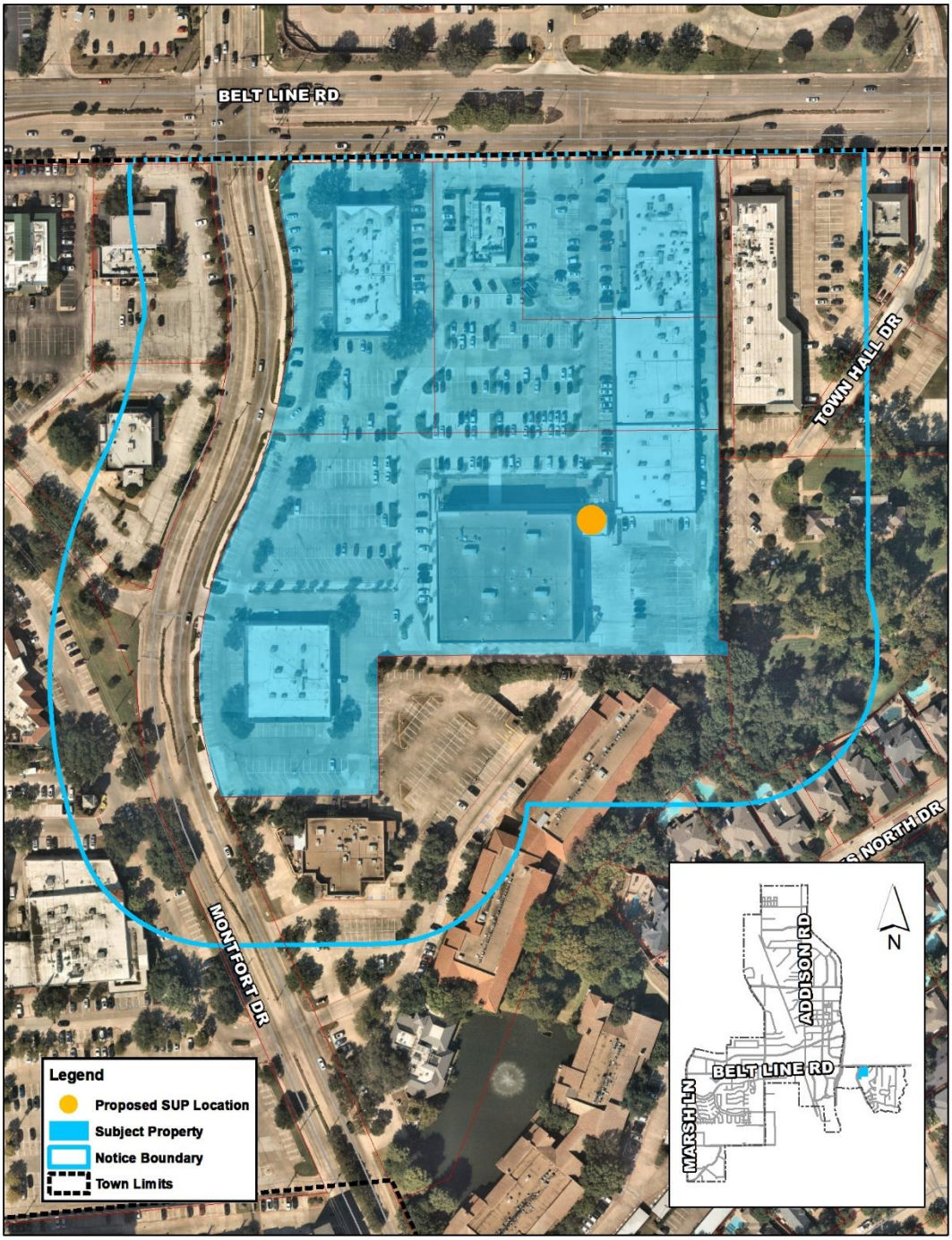

December 16, 2021

**STAFF REPORT**

| | |
|---|---|
| RE: | 1845-SUP/La La Land Kind Café |
| LOCATION: | 5294 Belt Line Road, Suite 110 |
| REQUEST: | Approval of a Special Use Permit for a restaurant to permit a café. |
| APPLICANT: | Dario Ferdows, La La Land Kind Café |

DISCUSSION:

Background: This proposed restaurant, La La Land Kind Café, is located within the Prestonwood Place shopping center, situated at the southeast corner of Belt Line Road and Montfort Drive. This center is zoned Planned Development (PD) District, through Ordinance O19-22.

This new establishment, simply known as La La Land, has occupied a tenant space in Building D, in the same building as Catapult Health and Mendocino Farms. Over the last several years, Prestonwood Place underwent extensive renovations that modernized the facades, and the exterior space of Building D was also updated with the addition of common open space. La La Land is a small café that offers specialty beverages and foods for dine-in and take out consumption, which requires a Special Use Permit (SUP).

Founded in Dallas in 2019, La La Land Kind Café has opened several locations in Dallas (Lovers Lane, Oak Lawn, Lowest Greenville) and one in Santa Monica, California. This cafe started as a way to provide opportunities for youth that have aged out of the foster care system; their mission is centered on normalizing kindness, and they operate an eight week internship program for foster youth.

Typically, this SUP consideration would come before the Commission prior to a business opening. In this PD, coffee shops that do not provide onsite dining do not require an SUP. At several points during the permit review process, Town staff communicated to the Prestonwood Place development team what would trigger the Town's SUP requirements. Their team confirmed that there would not be any interior seating in this tenant space and that the exterior seating was common area for the development. These conditions were also reflected in the building permit application that was submitted for La La Land.

As the interior finish out work was completed, and immediately prior to the planned grand opening, interior seating was installed by the business, which triggered this SUP requirement. Rather than forcing the removal of the seating or preventing the business from opening, staff issued a Temporary Certificate of Occupancy (TCO) with the condition that an SUP application be submitted for Town consideration. Given the nature of the use and the businesses' unfamiliarity with the Town's SUP requirements, staff found this to be a reasonable approach to this issue.

Proposed Plan: The applicant is requesting approval of an SUP for a restaurant. The new restaurant space is 1,295 square feet, with an additional 227 square foot of outdoor patio. The existing tenant space has been completely remodeled to suit the needs of La La Land Kind Café. The floor plan shows a storage area and a large service counter for the preparation of beverages and food. A small area for the sale of branded merchandise is setup in the interior of the storefront along with seating for 12 patrons. Additional seating is provided in the outdoor patio area for 8 patrons.

Parking: This property is zoned PD, which requires a parking ratio of 1 space per 200 square feet across all uses. Based on the shopping center's total square footage, including this tenant space, it requires 675 parking spaces. There are 768 parking spaces provided on site, exceeding the minimum parking required by the PD district.

Exterior Facades: Improvements to the building façade were completed with the overall improvements to the building. With the exception of signage, La La Land does not propose to make improvements to the exterior of the building.

Landscaping and Open Space: Landscape plans were reviewed through the rezoning process for the shopping center in 2019. Through this process, staff has worked to maximize compliance with the Town's landscape requirements. Additional landscaping or open space is not required at this lease space according to the approved landscape plan.

RECOMMENDATION: **APPROVAL**

La La Land Kind Café will add to the diverse services offered at Prestonwood Place and its company mission that gives back to the community is a great addition to Addison.

Staff recommends approval of the request without conditions.

Case 1845-SUP/5294 Belt Line Road, Suite 110 (La La Land Kind Café)

December 21, 2021

COMMISSION FINDINGS:

The Addison Planning and Zoning Commission, meeting in regular session on December 21, 2021, voted to recommend approval of an ordinance changing the zoning on property located at 5294 Belt Line Road, Suite 110, currently zoned Planned Development (PD), through Ordinance O19-22, by approving a Special Use Permit (SUP) for a restaurant.

Voting Aye: Catalani, Craig, DeFrancisco, Fansler, Meleky, Resnik, Souers
Voting Nay: none
Absent: none

SPEAKERS AT THE PUBLIC HEARING:

For: none
On: none
Against: none

Please refer to the Staff Report for additional details.

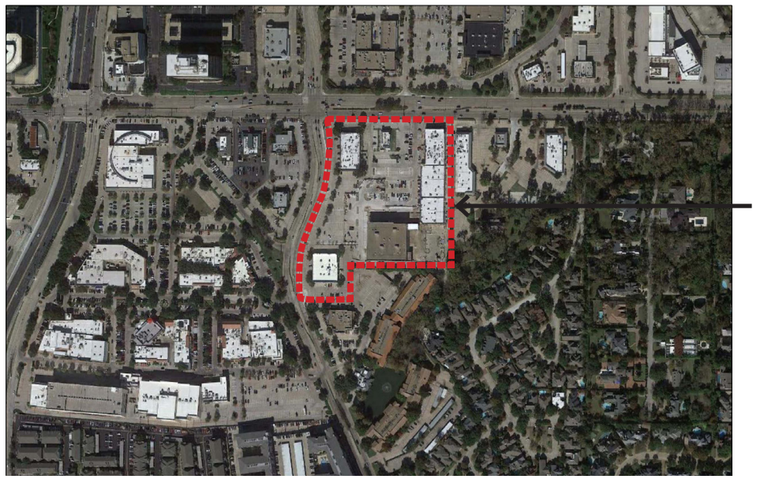


Vicinity Map (NTS)

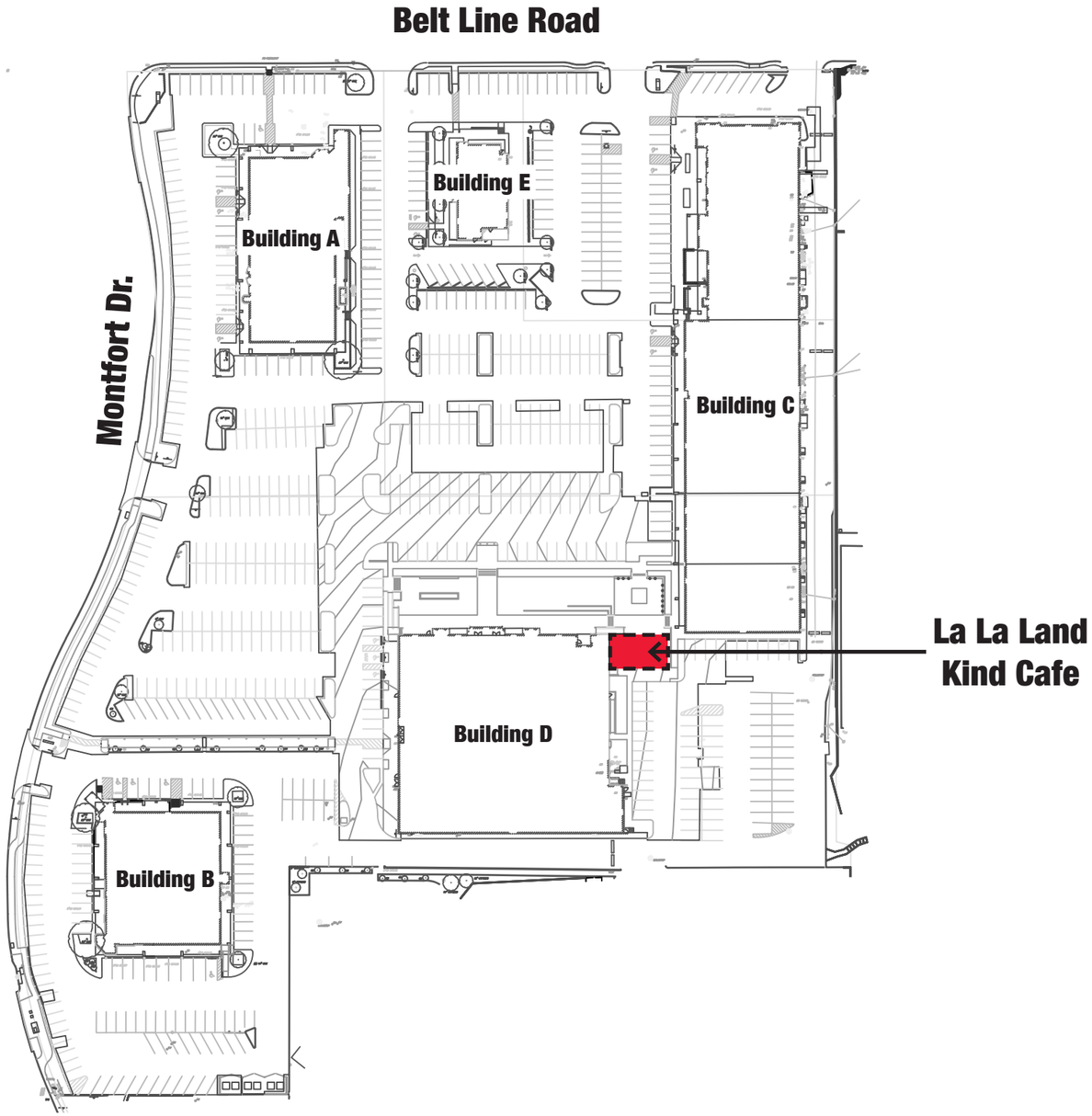


**Site Data**

**Lot Area -** 75,571 SF (10.88 AC)
**Existing Zoning -** Planned Development (PD) District 019-22
**Total Building Area** - 135,000 SF
**Parking Ratio** - 1 space / 200 SF
**Required Parking -** 675
**Provided Parking** - 768

**Property Owner**
Northwood Retail, LLC
8080 Park Lane, Suite 600
Dallas, TX 75231
469.828.3313
Ryan Muscott

**Applicant**
La La Land Kind Cafe
10505 Shady Trail
Dallas, TX 75220
972.741.0868
Dario Ferdows

**Compiled By**
ZMOWERY Architecture
550 Reserve Street, Suite 190
Southlake, TX 76092
817.223.2804
Zac Mowery

**Legal Description & Address**
Prestonwood Place Lots A,B,C,&,D, BLOCK 2,
5294 Belt Line Road Suite 110
**Town Project Number**
1845-SUP

# SUP SITE PLAN

N

0 50’ 100’ 200’
1” = 100’-0”

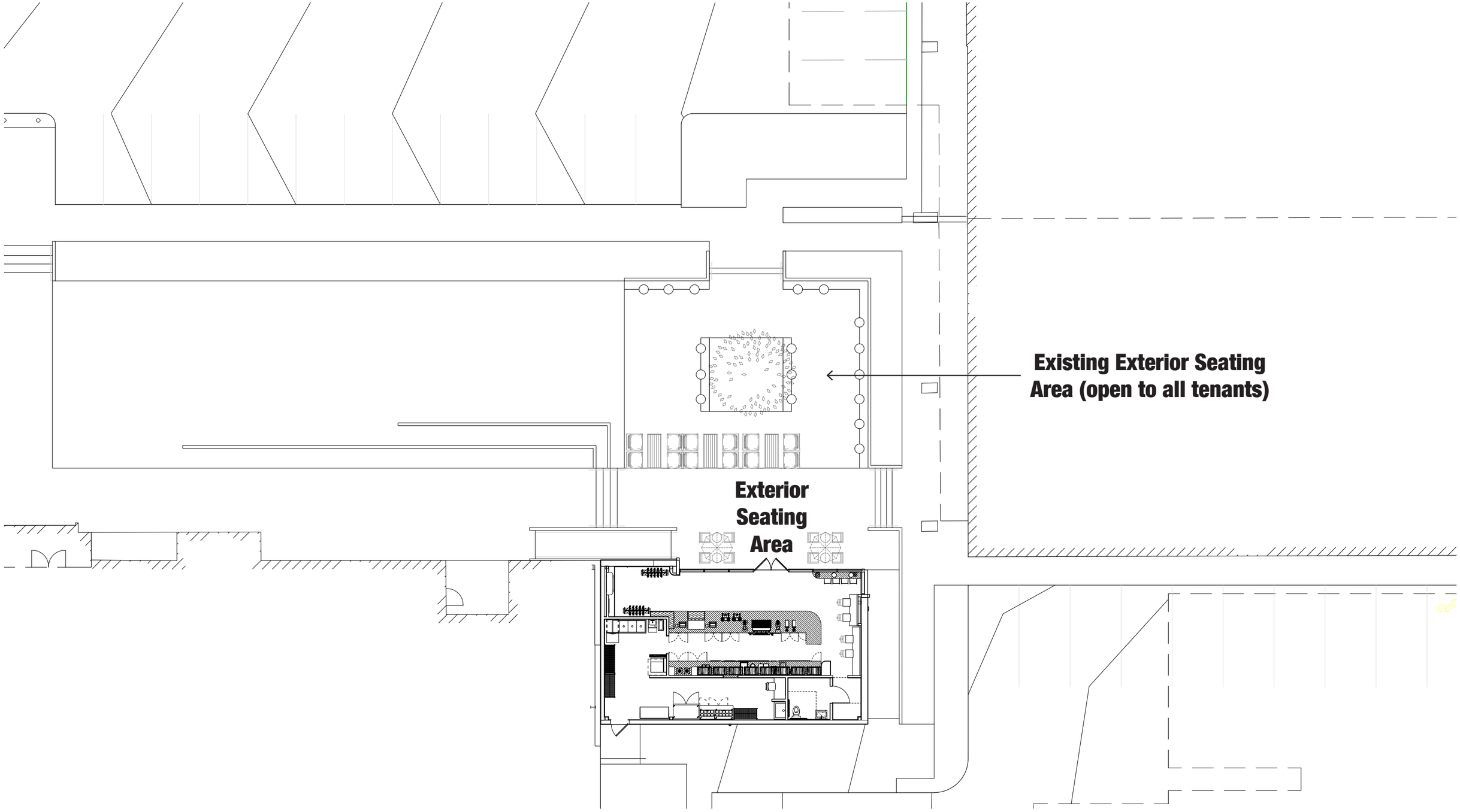


**Property Owner**
Northwood Retail, LLC
8080 Park Lane, Suite 600
Dallas, TX 75231
469.828.3313
Ryan Muscott

**Applicant**
La La Land Kind Cafe
10505 Shady Trail
Dallas, TX 75220
972.741.0868
Dario Ferdows

**Compiled By**
ZMOWERY Architecture
550 Reserve Street, Suite 190
Southlake, TX 76092
817.223.2804
Zac Mowery

**Legal Description & Address**
Prestonwood Place Lots A,B,C,&,D, BLOCK 2,
5294 Belt Line Road Suite 110

**Town Project Number**
1845-SUP

# SUP ENLARGED SITE PLAN

N

0 8' 16' 32'

1/16" = 1'-0"

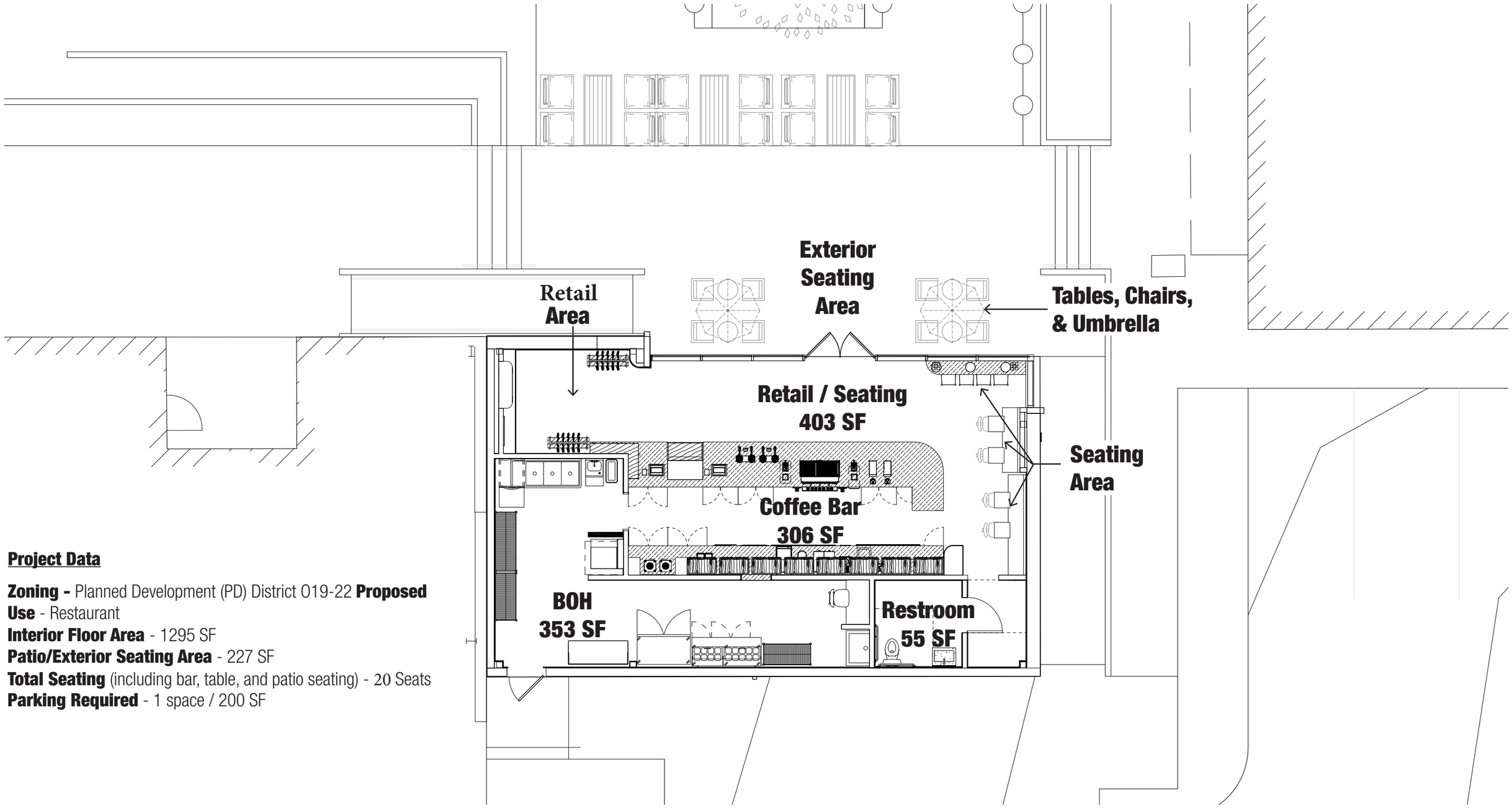


**Project Data**

**Zoning -** Planned Development (PD) District 019-22 **Proposed Use** - Restaurant
**Interior Floor Area** - 1295 SF
**Patio/Exterior Seating Area** - 227 SF
**Total Seating** (including bar, table, and patio seating) - 20 Seats
**Parking Required** - 1 space / 200 SF

**Property Owner**
Northwood Retail, LLC
8080 Park Lane, Suite 600
Dallas, TX 75231
469.828.3313
Ryan Muscott

**Applicant**
La La Land Kind Cafe
10505 Shady Trail
Dallas, TX 75220
972.741.0868
Dario Ferdows

**Compiled By**
ZMOWERY Architecture
550 Reserve Street, Suite 190
Southlake, TX 76092
817.223.2804
Zac Mowery

**Legal Description & Address**
Prestonwood Place Lots A,B,C,&,D, BLOCK 2,
5294 Belt Line Road Suite 110
**Town Project Number**
1845-SUP

# SUP FLOOR PLAN

N

0 4’ 8’ 16’
1/8” = 1’-0”

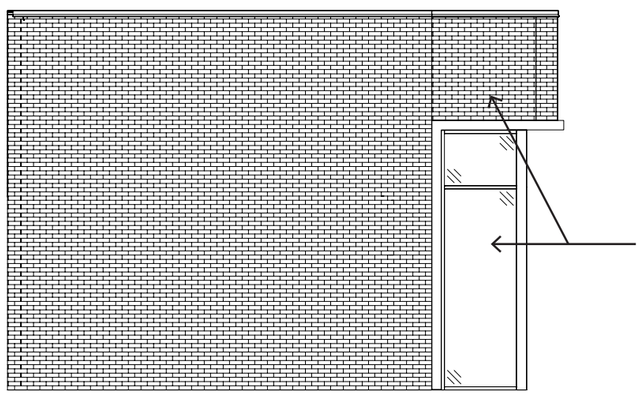

**EXISTING BRICK AND STOREFRONT TO REMAIN**

EAST ELEVATION

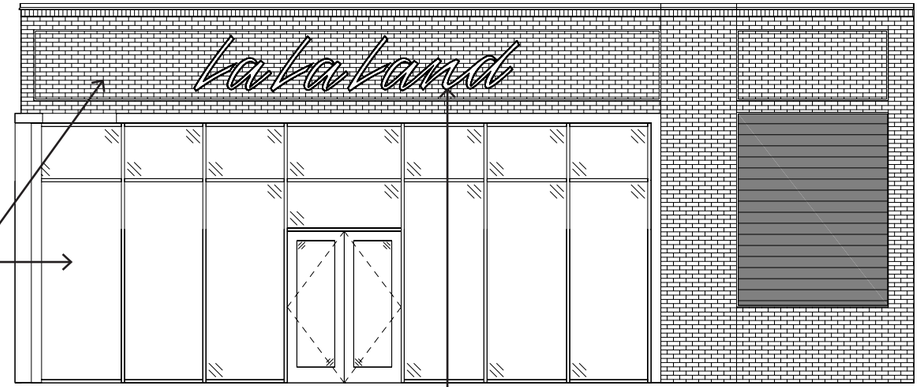


**EXISTING BRICK AND STOREFRONT TO REMAIN**

NORTH ELEVATION

**NEW SIGNAGE**

**Property Owner**
Northwood Retail, LLC
8080 Park Lane, Suite 600
Dallas, TX 75231
469.828.3313
Ryan Muscott

**Applicant**
La La Land Kind Cafe
10505 Shady Trail
Dallas, TX 75220
972.741.0868
Dario Ferdows

**Compiled By**
ZMOWERY Architecture
550 Reserve Street, Suite 190
Southlake, TX 76092
817.223.2804
Zac Mowery

**Legal Description & Address**
Prestonwood Place Lots A,B,C,&,D, BLOCK 2,
5294 Belt Line Road Suite 110

**Town Project Number**
1845-SUP

# SUP BUILDING ELEVATIONS

0 4’ 8’ 16’

1/8” = 1’-0”

**Council Meeting** **15.**

**Meeting Date:** 01/11/2022

**Department:** City Secretary

**Pillars:** Excellence in Transportation Systems

**AGENDA CAPTION:**

Present, Discuss, and Consider Action on a **Resolution Casting Addison's Vote for Michael Hurtt for the Fourth Member of the Board of Directors of the Dallas Central Appraisal District.**

**BACKGROUND:**

At the November 9, 2021 Council Meeting, the City Council approved Resolution No. R21-085 casting their vote for Mr. Michael Hurtt as their selection for re-appointment as the Suburban Cities Representative to the Dallas Central Appraisal District (DCAD). Mr. Hurtt currently serves in that position and had expressed interest in serving for the 2022-2024 term.

On December 27, 2021, Cheryle Jordan, Director of Community Relations for the Dallas Central Appraisal District, advised that the Suburban Cities Election will require a runoff since there was not a candidate who received 16 votes (the majority of the 30 votes eligible). A runoff election is necessary between the top two finishers. Votes cast are shown below:

| Candidates | Votes Cast |
|---|---|
| Michael Hurtt | 13 |
| Brett Franks | 4 |
| Shante Allen | 3 |
| Diane Cartwright | 1 |
| Steve Nichols | 1 |

The attached Resolution requires action by the City Council.

**RECOMMENDATION:**

Staff requests direction from Council.

**Attachments**

Resolution - Cast Runoff Election Ballot

**RESOLUTION NO. R21-___**

**A RESOLUTION OF THE TOWN OF ADDISON, DALLAS COUNTY, TEXAS, CASTING ITS VOTE FOR THE FOURTH MEMBER OF THE BOARD OF DIRECTORS OF THE DALLAS CENTRAL APPRAISAL DISTRICT.**

**WHEREAS,** Dallas County eligible taxing entities have expressed and approved an option which allows for representation to the Appraisal District Board of Directors (in accordance with Section 6.03 of the Texas Property Tax Code) as follows:

1. The City of Dallas shall appoint one (1) member to the Board.

2. The Dallas Independent School District shall appoint one (1) member to the Board.

3. The Dallas County Commissioners Court shall appoint one (1) member to the Board. The member appointed by the Dallas County Commissioners Court shall not be a resident of either the City of Dallas or the Dallas Independent School District.

4. Each of the incorporated cities and towns, except for the City of Dallas, shall have the right to nominate by an official resolution one (1) candidate as the fourth member of the Board of Directors. The said cities and towns shall, from the nominations received, elect by a majority vote, with each city and town being entitled to one (1) vote, the fourth member of the Board of Directors.

5. Each of the School Districts, and the Dallas County Community College District, except the Dallas Independent School District, shall have the right to nominate by an official resolution one (1) candidate as the fifth member of the Board of Directors. The said school districts shall, from the nominations received, elect by a majority vote, with each school district and the community college district being entitled to one (1) vote, the fifth member of the Board of Directors.

The votes required for election to the Board of Directors in 4 and 5 hereof shall be by a majority of those authorized to vote in 4 and 5 respectively and not by a majority of the quorum, and

**WHEREAS,** the Town of Addison does hereby cast its vote by marking the ballot below:

(Check one only)

☐ **Michael Hurtt**

☐ **Brett Franks**

**NOW, THEREFORE BE IT RESOLVED** that the City Council of the Town of Addison does hereby confirm its one (1) vote for the election of _____ as the suburban cities' representative to the Board of Directors of the Dallas Central Appraisal District.

**DULY RESOLVED** and **APPROVED,** this the ***11th*** day of ***JANUARY*** **2022.**

**TOWN OF ADDISON, TEXAS**

Joe Chow, Mayor

**ATTEST:**

Irma G. Parker, City Secretary

**Dallas Central Appraisal District**

# RUNOFF ELECTION NOTICE

**DATE:** **December 22, 2021**

**TO:** **Mayors of Dallas County Suburban Cities**

**FROM:** **W. Kenneth Nolan, Executive Director/Chief Appraiser**

**RE:** **Results of 2021 Election of Suburban Cities Representative to DCAD Board of Directors**

State law requires the Chief Appraiser to conduct an election of representatives to the Board of Directors in odd numbered years. The process outlined in the Texas Property Tax Code requires the election to be conducted and the individual entities notified of the results once the process is complete.

**1. Suburban Cities Election**

The election process requires a runoff. The following suburban cities participated in the election. Each of their selections is noted below. The current tally indicates Michael Hurtt of Desoto received 13, Brett Franks of Sachse received 4, Shante L. Allen of Glenn Heights received 3, Diane Cartwright of Irving received 1, and Steve Nichols of Hutchins received 1 of the 22 votes cast. Since there was no one candidate receiving 16 votes (majority of the 30 votes eligible), a runoff election is necessary between the top two finishers: Michael Hurtt of Desoto and Brett Franks of Sachse.

| City | Candidate Selected |
|---|---|
| 1. Addison | Michael Hurtt |
| 2. Balch Springs | Michael Hurtt |
| 3. Carrollton | Michael Hurtt |
| 4. Cedar Hill | Michael Hurtt |
| 5. Cockrell Hill | No Vote |
| 6. Combine | No Vote |
| 7. Coppell | No Vote |
| 8. DeSoto | Shante L. Allen |
| 9. Duncanville | Michael Hurtt |
| 10. Farmers Branch | Michael Hurtt |
| 11. Ferris | No Vote |
| 12. Garland | No Vote |
| 13. Glenn Heights | Shante L. Allen |
| 14. Grand Prairie | No Vote |

| | |
|---|---|
| 15. Grapevine | No Vote |
| 16. Highland Park | Michael Hurtt |
| 17. Hutchins | Steve Nichols |
| 18. Irving | Diane Cartwright |
| 19. Lancaster | Shante L. Allen |
| 20. Lewisville | No Vote |
| 21. Mesquite | Michael Hurtt |
| 22. Ovilla | Michael Hurtt |
| 23. Richardson | Michael Hurtt |
| 24. Rowlett | Brett Franks |
| 25. Sachse | Brett Franks |
| 26. Seagoville | Michael Hurtt |
| 27. Sunnyvale | Michael Hurtt |
| 28. University Park | Michael Hurtt |
| 29. Wilmer | Brett Franks |
| 30. Wylie | Brett Franks |

**A runoff ballot and procedures are attached.**

**Please make plans on your council agenda during January to vote for a Suburban Cities Representative**. **<u>One of the two candidates must receive 16 votes to be elected</u>. We would appreciate your cooperation in this important process.**

Attachment
Runoff Ballot

cc: DCAD Board of Directors

Mr. Michael Hurtt
217 South Hampton Rd
Desoto, TX 75115

Mr. Brett Franks
4811 West Creek Ln.
Sachse, TX 75048-4301

Ms. Shante L. Allen
1602 Wavecrest Dr.
Desoto, TX 75115

Ms. Diane Cartwright
7520 North MacArthur Blvd., Suite 100
Irving, TX 75063

Mr. Steve Nichols
321 N. Main Street
P.O. Box 500
Hutchins, TX 75141

City Manager- Suburban Cities
City Secretary - Suburban Cities
Suburban Cities Tax Assessor/Collectors

**Council Meeting** **16.**

**Meeting Date:** 01/11/2022

**Department:** City Secretary

---

**AGENDA CAPTION:**

Present, Discuss, and Consider Action on an **Ordinance Calling and Ordering the May 7, 2022 General Election.**

**BACKGROUND:**

A general election is conducted each May to elect representatives to the Addison City Council as necessary. The attached Ordinance establishes the procedures for the May 7, 2022 General Election in accordance with state law and the Town's Home Rule Charter. The election is called to elect three (3) City Council Members.

The first day to file for a place on the May ballot is Wednesday, January 19, 2022. The last day to file is Friday, February 18, 2022.

The Town will enter into a Joint Election Contract with the Dallas County Election Department for the May 7, 2022 General Election. All procedures remain the same as in previous years.

Should the election be uncontested and unnecessary, the Town will have the opportunity to cancel the election in accordance with the Election Code.

**RECOMMENDATION:**

Administration recommends approval.

---

**Attachments**

Ordinance - Call May 2022 Election

---

**ORDINANCE NO. O22-____**

**AN ORDINANCE OF THE TOWN OF ADDISON, TEXAS CITY COUNCIL ORDERING A GENERAL ELECTION TO BE HELD ON SATURDAY, MAY 7, 2022, FOR THE PURPOSE OF ELECTING THREE (3) COUNCIL MEMBERS FOR A TERM OF TWO (2) YEARS; DESIGNATING POLLING PLACES WITHIN THE TOWN; ESTABLISHING OTHER PROCEDURES FOR THE CONDUCT OF THE ELECTION, INCLUDING PROVIDING THAT THE ELECTION IS TO BE HELD AS A JOINT ELECTION IN CONJUNCTION WITH DALLAS COUNTY.**

**NOW THEREFORE, BE IT ORDAINED BY THE COUNCIL OF THE TOWN OF ADDISON, TEXAS, THAT:**

**SECTION 1:** In accordance with the general laws and Constitution of the State of Texas, and the Charter of the Town, a General Election is hereby called and ordered for Saturday, May 7, 2022. All resident, qualified voters of the Town of Addison shall be permitted to vote, in said election for the purpose of electing three (3) Council members for a term of two (2) years.

**SECTION 2:** The presently existing boundaries and territory of the Dallas County election precincts that are wholly or partly within the corporate limits of the Town shall constitute the election precincts for the election. The precinct numbers for the same shall be the corresponding Dallas County precinct numbers. The polling places for the general election shall be as set forth in the Joint Election Agreement (as defined in Section 3, below) with the Town locations designated as Addison Fire Station #1, 4798 Airport Parkway – Early Voting and Election Day; and Addison Fire Station #2, 3950 Beltway Drive – Election Day

**SECTION 3:** The election shall be held as a joint election with Dallas County and other municipalities and school districts pursuant to a Joint Election Agreement for the conduct of a joint election to be held on May 7, 2022 and the County shall be responsible for appointing all election judges and clerks and shall be responsible for their compensation. Election judges and clerks shall have the qualifications required by law and notice of appointment shall be given to such judges and clerks by the Administrator in accordance with law.

**SECTION 4:** Applications to have the name of the candidate placed on the ballot may not be filed earlier than thirty (30) days before the deadline prescribed by the Election Code for filing applications with the City Secretary, and that the earliest date for a candidate to file same will be Wednesday, January 19, 2022, at 8:00 am., with the last day for filing to be Friday, February 18, 2022 at 5:00 p.m. in accordance with Election Code Sect. 143.006 and 143.007.

**SECTION 5:** The order in which the names of the candidates are to be printed on the ballot for council members on said Addison City Council shall be determined by a drawing conducted by the City Secretary, as provided by Section 52.094 of the Texas Election Code, on Tuesday, February 22, 2022 at 10:30 a.m. in the Council Chamber at Addison Town Hall, 5300 Belt Line, Road, Dallas, Texas 75254.

**SECTION 6:** Michael Scarpello9, Dallas County Elections Administrator, is hereby appointed as Early

Voting Clerk. The period for early voting by personal appearance, as established by provisions of the Texas Election Code, are between the hours or 8:00 a.m. and 5:00 p.m. beginning Monday, April 25, 2022 and ending on Tuesday, May 3, 2022. Early Voting by personal appearance will be conducted in the Office of the Elections Department, 1520 Round Table Drive, Dallas, Texas 75247 and at other locations so designated by the Dallas Council Elections Administrator.

**SECTION 7:** The Early Voting Clerk shall process all applications for early voting by mail. Applications for ballot by mail shall be mailed to: Dallas County Elections Department, 1520 Round Table Drive, Dallas, Texas 75247. The last day for unregistered applicant to submit a federal post card application and be eligible to vote a full ballot is the close of business on Monday, April 18, 2022.

**SECTION 8:** Notice of this election shall be given in accordance with the provisions of the Texas Election Code and returns of such notice shall be made as provided for in said Code. The Mayor shall issue all necessary orders and writs for such election. Returns of such election shall be made to the City Secretary immediately after the closing of the polls. In addition, the election materials as outlined in Section 272.005, Texas Election Code, shall be printed in both English and Spanish for use at the polling places and for each voting for said election.

**SECTION 9:** The City Secretary will provide the Statement of Elected Officials to candidates who appear to have won or may win, on Monday, May 9, 2022. Pursuant to Home Rule Charter, Tuesday, May 10, 2022 at 5:00 p.m. has been set as the date of the Official Canvass. Mayor Joe Chow or a designated representative will provide the Oath of Office after the Official Canvass has been conducted. The City Secretary is directed to record results in the Election Register as soon as practical after the Canvass.

**SECTION 10:** The City Secretary is directed to transmit election results by city precinct in electronic form to the Secretary of State on or before Tuesday, May 31, 2022.

**SECTION 11:** Should any part, section, subsection, paragraph, sentence, clause or phrase contained in this ordinance is held to be unconstitutional or of no force and effect, such holding shall not affect the validity of the remaining portion of this ordinance, but in all respects said remaining portion shall be and remain in full force and effect.

**SECTION 12:** It is hereby officially found and determined that the meeting at which this ordinance is passed is open to the public as required by law, and that public notice of the time, place and purpose of said meeting was given as required.

**SECTION 13.** That this Ordinance shall become effective from and after its passage as may be required by law or by the City Charter or ordinance.

**PASSED AND APPROVED** by the City Council of the Town of Addison, Texas this the ***11th*** day of ***JANUARY*** **2022.**

**TOWN OF ADDISON, TEXAS**

_____
Joe Chow, Mayor

**ATTEST:**

_____
Irma G. Parker, City Secretary

**APPROVED AS TO FORM:**

_____
Whitt L. Wyatt, City Attorney

**Council Meeting** **17.**

**Meeting Date:** 01/11/2022

**Department:** Finance

**Pillars:** Gold Standard in Financial Health

**Milestones:** Continue development and implementation of Long Term Financial Plan

---

**AGENDA CAPTION:**

Present, Discuss, and Consider Action on an **Ordinance Authorizing the Issuance of Town of Addison, Texas, General Obligation Refunding Bonds, Series 2022 in the Approximate Amount of $8,755,000; Awarding the Sale Thereof; Levying a Tax, and Providing for the Security and Payment of Said Bonds; Authorizing the Execution and Delivery of a Paying Agent/Registrar Agreement and Deposit Agreement; Approving the Official Statement; Enacting Other Provisions Relating to the Subject; and Declaring an Effective Date**.

**BACKGROUND:**

At the November 9, 2021, Council meeting, staff presented a plan to take advantage of a favorable market environment to refund, i.e. refinance, the 2012 Combination Tax and Revenue Certificates of Obligation. Estimates provided at the November 9, 2021, Council meeting were that the refunding would create $836,359, or 8.83%, in Net Present Value savings over the remaining life of the debt.

Certain details concerning the General Obligation Refunding Bonds will not be known until the completion of the sale on January 11, 2022. This information will be made available at the Council meeting on January 11, 2022, prior to the discussion of this item. The ordinance will be updated at the meeting.

The Town of Addison's AAA/Aaa bond ratings from Standard and Poor's and Moody's were reaffirmed as part of this bond sale.

**RECOMMENDATION:**

Administration recommends approval.

---

**Attachments**

Ordinance - Authorization of 2022 General Obligation Refunding Bonds

---

ORDINANCE

relating to

$_____
TOWN OF ADDISON, TEXAS
GENERAL OBLIGATION REFUNDING BONDS
SERIES 2022

Adopted: January 11, 2022

TABLE OF CONTENTS

Page

ARTICLE I

DEFINITIONS AND OTHER PRELIMINARY MATTERS

Section 1.01. Definitions....6
Section 1.02. Findings....8
Section 1.03. Table of Contents, Titles, and Headings....8
Section 1.04. Interpretation....8

ARTICLE II

SECURITY FOR THE BONDS; INTEREST AND SINKING FUND

Section 2.01. Payment of the Bonds....9
Section 2.02. Interest and Sinking Fund....9

ARTICLE III

AUTHORIZATION; GENERAL TERMS AND PROVISIONS
REGARDING THE BONDS

Section 3.01. Authorization....10
Section 3.02. Date, Denomination, Maturities, and Interest....10
Section 3.03. Medium, Method, and Place of Payment....10
Section 3.04. Execution and Registration of Bonds....12
Section 3.05. Ownership....12
Section 3.06. Registration, Transfer, and Exchange....13
Section 3.07. Cancellation....13
Section 3.08. Temporary Bonds....14
Section 3.09. Replacement Bonds....14
Section 3.10. Book-Entry-Only System....15
Section 3.11. Successor Securities Depository; Transfer Outside Book-Entry-Only System....16
Section 3.12. Payments to Cede & Co....16

ARTICLE IV

REDEMPTION OF BONDS BEFORE MATURITY

Section 4.01. Limitation on Redemption....16
Section 4.02. Optional Redemption....17
Section 4.03. Mandatory Sinking Fund Redemption....17
Section 4.04. Partial Redemption....18
Section 4.05. Partial Redemption....18
Section 4.06. Notice of Redemption to Owners....19

Section 4.07. Payment Upon Redemption ..... 19
Section 4.08. Effect of Redemption ..... 19
Section 4.09. Conditional Notice of Redemption ..... 19
Section 4.10. Lapse of Payment ..... 20

ARTICLE V

PAYING AGENT/REGISTRAR

Section 5.01. Appointment of Initial Paying Agent/Registrar ..... 20
Section 5.02. Qualifications ..... 20
Section 5.03. Maintaining Paying Agent/Registrar ..... 20
Section 5.04. Termination ..... 21
Section 5.05. Notice of Change to Owners ..... 21
Section 5.06. Agreement to Perform Duties and Functions ..... 21
Section 5.07. Delivery of Records to Successor ..... 21

ARTICLE VI

FORM OF THE BONDS

Section 6.01. Form Generally ..... 21
Section 6.02. Form of the Bonds ..... 22
Section 6.03. CUSIP Registration ..... 28
Section 6.04. Legal Opinion ..... 28
Section 6.05. Statement Insurance ..... 28

ARTICLE VII

SALE AND DELIVERY OF BONDS;
DEPOSIT OF PROCEEDS; FLOW OF FUNDS

Section 7.01. Sale of Bonds; Official Statement ..... 28
Section 7.02. Control and Delivery of Bonds ..... 29

ARTICLE VIII

CREATION OF FUNDS AND ACCOUNTS;
DEPOSIT OF PROCEEDS; INVESTMENTS

Section 8.01. Creation of Funds ..... 30
Section 8.02. Interest and Sinking Fund ..... 30
Section 8.03. Security of Funds ..... 30
Section 8.04. Deposit of Proceeds ..... 30
Section 8.05. Investments ..... 31
Section 8.06. Investment Income ..... 31

ARTICLE IX

PARTICULAR REPRESENTATIONS AND COVENANTS

Section 9.01. Payment of the Bonds ....31
Section 9.02. Other Representations and Covenants ....31
Section 9.03. Federal Income Tax Matters ....32
Section 9.04. No Private Use or Payment and No Private Loan Financing....33
Section 9.05. No Federal Guaranty....33
Section 9.06. No Hedge Bonds....33
Section 9.07. No Arbitrage ....34
Section 9.08. Arbitrage Rebate ....34
Section 9.09. Information Reporting ....34
Section 9.10. Record Retention ....34
Section 9.11. Registration....35
Section 9.12. Deliberate Actions ....35
Section 9.13. Continuing Obligation ....35

ARTICLE X

DEFAULT AND REMEDIES

Section 10.01. Events of Default ....35
Section 10.02. Remedies for Default....35
Section 10.03. Remedies Not Exclusive....36

ARTICLE XI

DISCHARGE

Section 11.01. Discharge ....36

ARTICLE XII

CONTINUING DISCLOSURE UNDERTAKING

Section 12.01. Annual Reports ....36
Section 12.02. Material Event Notices ....37
Section 12.03. Limitations, Disclaimers and Amendments....38

ARTICLE XIII

AMENDMENTS

Section 13.01. Amendments....40

ARTICLE XIV

MISCELLANEOUS

Section 14.01. Changes to Ordinance .....40
Section 14.02. Partial Invalidity.....40
Section 14.03. No Personal Liability .....40

ARTICLE XV

REDEMPTION OF REFUNDED OBLIGATIONS; DEPOSIT AGREEMENT;
PURCHASE OF SECURITIES

Section 15.01. Payment of Paying Agent .....41
Section 15.02. Deposit Agreement .....41
Section 15.03. Redemption of Refunded Obligations .....41

ARTICLE XVI

EFFECTIVENESS

Section 16.01. Effectiveness .....41

Schedule of Refunded Obligations
……Schedule I

AN ORDINANCE AUTHORIZING THE ISSUANCE OF TOWN OF ADDISON, TEXAS, GENERAL OBLIGATION REFUNDING BONDS, SERIES 2022 IN THE AGGREGATE PRINCIPAL AMOUNT OF $_____; AWARDING THE SALE THEREOF; LEVYING A TAX, AND PROVIDING FOR THE SECURITY FOR AND PAYMENT OF SAID BONDS; AUTHORIZING THE EXECUTION AND DELIVERY OF A PAYING AGENT/REGISTRAR AGREEMENT AND DEPOSIT AGREEMENT; APPROVING THE OFFICIAL STATEMENT; ENACTING OTHER PROVISIONS RELATING TO THE SUBJECT; AND DECLARING AN EFFECTIVE DATE

WHEREAS, there are presently outstanding certain obligations of the Town of Addison, Texas (the "Town"), which are secured by and payable from ad valorem taxes levied on property within the Town in an amount sufficient to pay principal of and interest on such obligations as they become due within the limits prescribed by law; and

WHEREAS, the Town now desires to refund such obligations described on Schedule I hereto (such refunded obligations to be hereinafter referred to as the "Refunded Obligations"); and

WHEREAS, Chapter 1207, Texas Government Code, as amended ("Chapter 1207") authorizes the Town to issue refunding bonds for the purpose of refunding or defeasing the Refunded Obligations in advance of their maturities, and to accomplish such refunding or defeasance by depositing directly with a paying agent for the Refunded Obligations (or other qualified escrow agent), the proceeds of such refunding bonds, together with other available funds, in an amount sufficient to provide for the payment or redemption of the Refunded Obligations, and provides that such deposit shall constitute the making of firm banking and financial arrangements for the discharge and final payment or redemption of the Refunded Obligations; and

WHEREAS, upon the issuance of the refunding bonds herein authorized and the deposit of funds referred to above, the Refunded Obligations shall no longer be regarded as being outstanding, except for the purpose of being paid pursuant to such deposit, and the pledges, liens, trusts and all other covenants, provisions, terms and conditions of the orders authorizing the issuance of the Refunded Obligations shall be, with respect to the Refunded Obligations, discharged, terminated

WHEREAS, the City Council hereby finds and determines that the issuance of the refunding bonds will result in a net present value debt service savings in the amount of $_____ and that such savings and the refunding contemplated in this Ordinance will benefit the Town and that such benefit is sufficient consideration for the refunding of the Refunded Obligations; and

WHEREAS, the City Council of the Town hereby finds and determines that the issuance and delivery of the bonds hereinafter authorized is in the public interest and the use of the proceeds in the manner herein specified constitutes a valid public purpose; and

WHEREAS, the City Council has found and determined that it is necessary and in the best interests of the Town and its citizens that it issue such bonds authorized by this Ordinance; and

WHEREAS, the meeting at which this Ordinance is considered is open to the public as required by law, and public notice of the time, place, and purpose of said meeting was given as required by Chapter 551, Texas Government Code, as amended; therefore,

BE IT ORDAINED BY THE CITY COUNCIL OF THE TOWN OF ADDISON, TEXAS, THAT:

## ARTICLE I

## DEFINITIONS AND OTHER PRELIMINARY MATTERS

Section 1.01. Definitions.

Unless otherwise expressly provided or unless the context clearly requires otherwise in this Ordinance, the following terms shall have the meanings specified below:

"Bond" means any of the Bonds.

"Bonds" means the bonds authorized to be issued by Section 3.01 of this Ordinance and designated as "Town of Addison, Texas, General Obligation Refunding Bonds, Series 2022.

"Business Day" means a day that is not a Saturday, Sunday, legal holiday or other day on which banking institutions in the city where the Designated Payment/Transfer Office is located are required or authorized by law or executive order to close.

"Closing Date" means the date of the initial delivery of and payment for the Bonds.

"Code" means the Internal Revenue Code of 1986, as amended, including applicable regulations, published rulings, and court decisions.

"Delivery Date" means the date of delivery of the Bonds to the Purchasers and designated as the initial date of the Bonds by Section 3.02(a) of this Ordinance.

"Deposit Agreement" means that agreement between the City and the paying agent/registrar for the Refunded Obligations set forth in Section 15.02 herein.

"Designated Payment/Transfer Office" means (i) with respect to the initial Paying Agent/Registrar named herein, its office in Dallas, Texas, or at such other location designated by the Paying Agent/Registrar and (ii) with respect to any successor Paying Agent/Registrar, the office of such successor designated and located as may be agreed upon by the Town and such successor.

"DTC" means The Depository Trust Company of New York, New York, or any successor securities depository.

"DTC Participant" means brokers and dealers, banks, trust companies, clearing corporations and certain other organizations on whose behalf DTC was created to hold securities to facilitate the clearance and settlement of securities transactions among DTC Participants.

"EMMA" means the Electronic Municipal Market Access System.

"Event of Default" means any event of default as defined in Section 10.01 of this Ordinance.

"Financial Obligation" means a (a) debt obligation; (b) derivative instrument entered into in connection with, or pledged as security or a source of payment for, an existing or planned debt obligation; or (c) guarantee of a debt obligation or any such derivative instrument; provided that "financial obligation" shall not include municipal securities (as defined in the Securities Exchange Act of 1934, as amended) as to which a final official statement (as defined in the Rule) has been provided to the MSRB consistent with the Rule.

"Fiscal Year" means such fiscal year as shall from time to time be set by the City Council.

"Initial Bond" means the initial bond authorized by Section 3.04(d) of this Ordinance.

"Interest and Sinking Fund" means the interest and sinking fund established by Section 2.02 of this Ordinance.

"Interest Payment Date" means the date or dates upon which interest on the Bonds is scheduled to be paid until their respective dates of maturity or prior redemption, such dates being February 15 and August 15 of each year commencing August 15, 2022.

"MSRB" means the Municipal Securities Rulemaking Board.

"Ordinance" means this Ordinance.

"Owner" means the person who is the registered owner of a Bond or Bonds, as shown in the Register.

"Paying Agent/Registrar" means initially The Bank of New York Mellon Trust Company, National Association, Dallas, Texas, or any successor thereto as provided in this Ordinance.

"Purchaser(s)" means the initial purchaser(s) of the Bonds as set forth in Section 7.01.

"Record Date" means the last Business Day of the month next preceding an Interest Payment Date.

"Refunded Obligations" means those obligations of the Town set forth in Schedule I hereto.

"Register" means the Register specified in Section 3.06(a) of this Ordinance.

"Representations Letter" means the Blanket Letter of Representations between the Town and DTC.

"Rule" means SEC Rule 15c2-12, as amended from time to time.

"SEC" means the United States Securities and Exchange Commission.

"Special Payment Date" means the Special Payment Date prescribed by Section 3.03(b).

"Special Record Date" means the Special Record Date prescribed by Section 3.03(b).

"Town" means the Town of Addison, Texas.

"Unclaimed Payments" means money deposited with the Paying Agent/Registrar for the payment of principal of, redemption premium, if any, or interest on the Bonds as the same come due and payable or money set aside for the payment of Bonds duly called for redemption prior to maturity.

Section 1.02. Findings.

The declarations, determinations, and findings declared, made, and found in the preamble to this Ordinance are hereby adopted, restated, and made a part of the operative provisions hereof.

Section 1.03. Table of Contents, Titles, and Headings.

The table of contents, titles, and headings of the Articles and Sections of this Ordinance have been inserted for convenience of reference only and are not to be considered a part hereof and shall not in any way modify or restrict any of the terms or provisions hereof and shall never be considered or given any effect in construing this Ordinance or any provision hereof or in ascertaining intent, if any question of intent should arise.

Section 1.04. Interpretation.

(a) Unless the context requires otherwise, words of the masculine gender shall be construed to include correlative words of the feminine and neuter genders and vice versa, and words of the singular number shall be construed to include correlative words of the plural number and vice versa.

(b) This Ordinance and all the terms and provisions hereof shall be liberally construed to effectuate the purposes set forth herein.

## ARTICLE II

## SECURITY FOR THE BONDS; INTEREST AND SINKING FUND

Section 2.01. Payment of the Bonds.

(a) Pursuant to the authority granted by the Texas Constitution and laws of the State of Texas, there shall be levied and there is hereby levied for the current year and for each succeeding year thereafter while any of the Bonds or any interest thereon is outstanding and unpaid, an ad valorem tax on each one hundred dollars valuation of taxable property within the Town, at a rate sufficient, within the limit prescribed by law, to pay the debt service requirements of the Bonds, being (i) the interest on the Bonds, and (ii) a sinking fund for their redemption at maturity or a sinking fund of two percent per annum (whichever amount is the greater), when due and payable, full allowance being made for delinquencies and costs of collection.

(b) The ad valorem tax thus levied shall be assessed and collected each year against all property appearing on the tax rolls of the Town most recently approved in accordance with law, and the money thus collected shall be deposited as collected to the Interest and Sinking Fund.

(c) Said ad valorem tax, the collections therefrom, and all amounts on deposit in or required hereby to be deposited to the Interest and Sinking Fund are hereby pledged and committed irrevocably to the payment of the principal of and interest on the Bonds when and as due and payable in accordance with their terms and this Ordinance.

(d) If the liens and provisions of this Ordinance shall be released in a manner permitted by Article XI hereof, then the collection of such ad valorem tax may be suspended or appropriately reduced, as the facts may permit, and further deposits to the Interest and Sinking Fund may be suspended or appropriately reduced, as the facts may permit. In determining the aggregate principal amount of outstanding Bonds, there shall be subtracted the amount of any Bonds that have been duly called for redemption and for which money has been deposited with the Paying Agent/Registrar for such redemption.

Section 2.02. Interest and Sinking Fund.

(a) The Town hereby establishes a special fund or account to be designated the "Town of Addison, Texas, General Obligation Refunding Bonds, Series 2022, Interest and Sinking Fund" (the "Interest and Sinking Fund") said fund to be maintained at an official depository bank of the Town separate and apart from all other funds and accounts of the Town.

(b) Money on deposit in or required by this Ordinance to be deposited to the Interest and Sinking Fund shall be used solely for the purpose of paying the interest on and principal of the Bonds when and as due and payable in accordance with their terms and this Ordinance.

ARTICLE III

AUTHORIZATION; GENERAL TERMS AND PROVISIONS
REGARDING THE BONDS

Section 3.01. Authorization.

The Town's bonds to be designated "Town of Addison, Texas, General Obligation Refunding Bonds, Series 2022" (the "Bonds"), are hereby authorized to be issued and delivered in accordance with the Constitution and laws of the State of Texas, specifically Chapter 1207, Texas Government Code, as amended. The Bonds shall be issued in the aggregate principal amount of $_____ to provide funds to (i) refund the Refunded Obligations and (ii) pay of the costs of issuance of the Bonds.

Section 3.02. Date, Denomination, Maturities, and Interest.

(a) The Bonds shall be dated January 1, 2022. The Bonds shall be in fully registered form, without coupons, in the denomination of $5,000 or any integral multiple thereof and shall be numbered separately from one upward, except the Initial Bond, which shall be numbered T-1.

(b) The Bonds shall mature on February 15 in the years and in the principal amounts set forth in the following schedule:

| Years | Principal Amount | Interest Rate | Years | Principal Amount | Interest Rate |
|---|---|---|---|---|---|
| 2/15/2023 | | | 2/15/2030 | | |
| 2/15/2024 | | | 2/15/2031 | | |
| 2/15/2025 | | | 2/15/2032 | | |
| 2/15/2026 | | | 2/15/2033 | | |
| 2/15/2027 | | | 2/15/2034 | | |
| 2/15/2028 | | | 2/15/2035 | | |
| 2/15/2029 | | | 2/15/2036 | | |

(c) Interest shall accrue and be paid on each Bond respectively until its maturity or prior redemption from the later of the date of delivery of the Bonds to the Purchaser (the "Delivery Date") or the most recent interest payment date to which interest has been paid or provided for at the rates per annum for each maturity specified in the schedule contained in subsection (b) above. Such interest shall be payable semiannually on February 15 and August 15 of each year commencing August 15, 2022, and shall be computed on the basis of a 360-day year of twelve 30-day months.

Section 3.03. Medium, Method, and Place of Payment.

(a) The principal of, redemption premium, if any, and interest on the Bonds shall be paid in lawful money of the United States of America.

(b) Interest on the Bonds shall be payable to the Owners as shown in the Register at the close of business on the Record Date; provided, however, in the event of nonpayment of interest on a scheduled Interest Payment Date and for 30 days thereafter, a new record date for such interest payment (a "Special Record Date") shall be established by the Paying Agent/Registrar, if and when funds for the payment of such interest have been received from the Town. Notice of the Special Record Date and of the scheduled payment date of the past due interest (the "Special Payment Date," which shall be 15 days after the Special Record Date) shall be sent at least five Business Days prior to the Special Record Date by United States mail, first class, postage prepaid, to the address of each Owner of a Bond appearing on the Register at the close of business on the last Business Day next preceding the date of mailing of such notice.

(c) Interest shall be paid by check, dated as of and mailed on the Interest Payment Date, and sent by the Paying Agent/Registrar to each Owner, first class United States mail, postage prepaid, to the address of each Owner as it appears in the Register, or by such other customary banking arrangement acceptable to the Paying Agent/Registrar and the Owner; provided, however, that the Owner shall bear all risk and expense of such alternative banking arrangement. At the option of an Owner of at least $1,000,000 principal amount of the Bonds, interest may be paid by wire transfer to the bank account of such Owner on file with the Paying Agent/Registrar.

(d) The principal of each Bond shall be paid to the Owner thereof on the due date, whether at the maturity date or the date of prior redemption thereof upon presentation and surrender of such Bond at the Designated Payment/Transfer Office of the Paying Agent/Registrar.

(e) If the date for the payment of the principal of or interest on the Bonds shall be a Saturday, Sunday, legal holiday, or day on which banking institutions in the city where the Designated Payment/Transfer Office of the paying Agent/Registrar is located are required or authorized by law or executive order to close, then the date for such payment shall be the next succeeding day which is not a Saturday, Sunday, legal holiday, or day on which banking institutions are required or authorized to close, and payment on such date shall have the same force and effect as if made on the original date payment was due and no additional interest shall be due by reason of nonpayment on the date on which such payment is otherwise stated to be due and payable.

(f) Unclaimed Payments shall be segregated in a special escrow account and held in trust, uninvested by the Paying Agent/Registrar, for the account of the Owners of the Bonds to which the Unclaimed Payments pertain. Subject to Title 6 of the Texas Property Code, Unclaimed Payments remaining unclaimed by the Owners entitled thereto for three years after the applicable payment or redemption date shall be applied to the next payment or payments on the Bonds thereafter coming due and, to the extent any such money remains after the retirement of all outstanding Bonds, shall be paid to the Town to be used for any lawful purpose. Thereafter, neither the Town, the Paying Agent/Registrar, nor any other person shall be liable or responsible to any Owners of such Bonds for any further payment of such unclaimed moneys or on account of any such Bonds, subject to Title 6 of the Texas Property Code.

Section 3.04. Execution and Registration of Bonds.

(a) The Bonds shall be executed on behalf of the Town by the Mayor and the City Secretary, by their manual or facsimile signatures, and the official seal of the Town shall be impressed or placed in facsimile thereon. Such facsimile signatures on the Bonds shall have the same effect as if each of the Bonds had been signed manually and in person by each of said officers, and such facsimile seal on the Bonds shall have the same effect as if the official seal of the Town had been manually impressed upon each of the Bonds.

(b) In the event that any officer of the Town whose manual or facsimile signature appears on the Bonds ceases to be such officer before the authentication of such Bonds or before the delivery thereof, such manual or facsimile signature nevertheless shall be valid and sufficient for all purposes as if such officer had remained in such office.

(c) Except as provided below, no Bonds shall be valid or obligatory for any purpose or be entitled to any security or benefit of this Ordinance unless and until there appears thereon the certificate of Paying Agent/Registrar substantially in the form provided herein, duly authenticated by manual execution by an officer or duly authorized signatory of the Paying Agent/Registrar. It shall not be required that the same officer or authorized signatory of the Paying Agent/Registrar sign the Certificate of Paying Agent/Registrar on all of the Bonds. In lieu of the executed Certificate of Paying Agent/Registrar described above, the Initial Bonds delivered at the Closing Date shall have attached thereto the Comptroller's Registration Certificate substantially in the form provided herein, manually executed by the Comptroller of Public Accounts of the State of Texas, or by his duly authorized agent, which Certificate shall be evidence that the Bond has been duly approved by the Attorney General of the State of Texas, that it is a valid and binding obligation of the Town, and that it has been registered by the Comptroller of Public Accounts of the State of Texas.

(d) On the Closing Date, one initial Bond (the "Initial Bond") representing the entire principal amount of all Bonds, payable in stated installments to the initial purchaser, or its designee, executed by the Mayor and City Secretary of the Town, approved by the Attorney General, and registered and manually signed by the Comptroller of Public Accounts, will be delivered to the initial purchaser or its designee. Upon payment for the Initial Bond, the Paying Agent/Registrar shall cancel the Initial Bond and deliver to DTC on behalf of the initial purchaser one registered definitive Bond for each year of maturity of the Bonds in the aggregate principal amount of all Bonds for such maturity, registered in the name of Cede & Co., as nominee of DTC.

Section 3.05. Ownership.

(a) The Town, the Paying Agent/Registrar, and any other person may treat the person in whose name any Bond is registered as the absolute owner of such Bond for the purpose of making and receiving payment as herein provided (except interest shall be paid to the person in whose name such Bond is registered on the Record Date or Special Record Date, as applicable), and for all other purposes, whether or not such Bond is overdue, and neither the Town nor the Paying Agent/Registrar shall be bound by any notice or knowledge to the contrary.

(b) All payments made to the Owner of a Bond shall be valid and effectual and shall discharge the liability of the Town and the Paying Agent/Registrar upon such Bond to the extent of the sums paid.

Section 3.06. Registration, Transfer, and Exchange.

(a) So long as any Bonds remain outstanding, the Town shall cause the Paying Agent/Registrar to keep at the Designated Payment/Transfer Office a register (the "Register") in which, subject to such reasonable regulations as it may prescribe, the Paying Agent/Registrar shall provide for the registration and transfer of Bonds in accordance with this Ordinance.

(b) The ownership of a Bond may be transferred only upon the presentation and surrender of the Bond at the Designated Payment/Transfer Office of the Paying Agent/Registrar with such endorsement or other evidence of transfer as is acceptable to the Paying Agent/Registrar. No transfer of any Bond shall be effective until entered in the Register.

(c) The Bonds shall be exchangeable upon the presentation and surrender thereof at the Designated Payment/Transfer Office of the Paying Agent/Registrar for a Bond or Bonds of the same maturity and interest rate and in a denomination or denominations of any integral multiple of $5,000, and in an aggregate principal amount equal to the unpaid principal amount of the Bonds presented for exchange. The Paying Agent/Registrar is hereby authorized to authenticate and deliver Bonds exchanged for other Bonds in accordance with this Section.

(d) Each exchange Bond delivered by the Paying Agent/Registrar in accordance with this Section shall constitute an original contractual obligation of the Town and shall be entitled to the benefits and security of this Ordinance to the same extent as the Bond or Bonds in lieu of which such exchange Bond is delivered.

(e) No service charge shall be made to the Owner for the initial registration, subsequent transfer, or exchange for a different denomination of any of the Bonds. The Paying Agent/Registrar, however, may require the Owner to pay a sum sufficient to cover any tax or other governmental charge that is authorized to be imposed in connection with the registration, transfer, or exchange of a Bond.

(f) Neither the Town nor the Paying Agent/Registrar shall be required to issue, transfer or exchange any Bond called for redemption, in whole or in part, within 45 calendar days prior to the date fixed for redemption; provided, however, such limitation shall not be applicable to an exchange by the Owner of the uncalled principal balance of a Bond.

Section 3.07. Cancellation.

All Bonds paid or redeemed before scheduled maturity in accordance with this Ordinance, and all Bonds in lieu of which exchange Bonds or replacement Bonds are authenticated and delivered in accordance with this Ordinance, shall be canceled and proper records made regarding such payment, redemption, exchange, or replacement. The Paying Agent/Registrar shall then return such canceled Bonds to the Town or may in accordance with law dispose of such cancelled Bonds.

Section 3.08. Temporary Bonds.

(a) Following the delivery and registration of the Initial Bond and pending the preparation of definitive Bonds, the proper officers of the Town may execute and, upon the Town's request, the Paying Agent/Registrar shall authenticate and deliver, one or more temporary Bonds that are printed, lithographed, typewritten, mimeographed, or otherwise produced, in any denomination, substantially of the tenor of the definitive Bonds in lieu of which they are delivered, without coupons, and with such appropriate insertions, omissions, substitutions, and other variations as the officers of the Town executing such temporary Bonds may determine, as evidenced by their signing of such temporary Bonds.

(b) Until exchanged for Bonds in definitive form, such Bonds in temporary form shall be entitled to the benefit and security of this Ordinance.

(c) The Town, without unreasonable delay, shall prepare, execute and deliver to the Paying Agent/Registrar the Bonds in definitive form; thereupon, upon the presentation and surrender of the Bond or Bonds in temporary form to the Paying Agent/Registrar, the Paying Agent/Registrar shall cancel the Bonds in temporary form and shall authenticate and deliver in exchange therefor a Bond or Bonds of the same maturity and series, in definitive form, in the authorized denomination, and in the same aggregate principal amount, as the Bond or Bonds in temporary form surrendered. Such exchange shall be made without the making of any charge therefor to any Owner.

Section 3.09. Replacement Bonds.

(a) Upon the presentation and surrender to the Paying Agent/Registrar of a mutilated Bond, the Paying Agent/Registrar shall authenticate and deliver in exchange therefor a replacement Bond of like tenor and principal amount, bearing a number not contemporaneously outstanding. The Town or the Paying Agent/Registrar may require the Owner of such Bond to pay a sum sufficient to cover any tax or other governmental charge that is authorized to be imposed in connection therewith and any other expenses connected therewith.

(b) In the event that any Bond is lost, apparently destroyed or wrongfully taken, the Paying Agent/Registrar, pursuant to the applicable laws of the State of Texas and in the absence of notice or knowledge that such Bond has been acquired by a bona fide purchaser, shall authenticate and deliver a replacement Bond of like tenor and principal amount, bearing a number not contemporaneously outstanding, provided that the Owner first complies with the following requirements:

(i) furnishes to the Paying Agent/Registrar satisfactory evidence of his or her ownership of and the circumstances of the loss, destruction, or theft of such Bond;

(ii) furnishes such security or indemnity as may be required by the Paying Agent/Registrar to save it and the Town harmless;

(iii) pays all expenses and charges in connection therewith, including, but not limited to, printing costs, legal fees, fees of the Paying Agent/Registrar, and any tax or other governmental charge that is authorized to be imposed; and

(iv) satisfies any other reasonable requirements imposed by the Town and the Paying Agent/Registrar.

(c) If, after the delivery of such replacement Bond, a bona fide purchaser of the original Bond in lieu of which such replacement Bond was issued presents for payment such original Bond, the Town and the Paying Agent/Registrar shall be entitled to recover such replacement Bond from the person to whom it was delivered or any person taking therefrom, except a bona fide purchaser, and shall be entitled to recover upon the security or indemnity provided therefor to the extent of any loss, damage, cost, or expense incurred by the Town or the Paying Agent/Registrar in connection therewith.

(d) In the event that any such mutilated, lost, apparently destroyed, or wrongfully taken Bond has become or is about to become due and payable, the Paying Agent/Registrar, in its discretion, instead of issuing a replacement Bond, may pay such Bond when it becomes due and payable.

(e) Each replacement Bond delivered in accordance with this Section shall constitute an original additional contractual obligation of the Town and shall be entitled to the benefits and security of this Ordinance to the same extent as the Bond or Bonds in lieu of which such replacement Bond is delivered.

Section 3.10. Book-Entry-Only System.

(a) Notwithstanding any other provision hereof, upon initial issuance of the Bond, the Bonds shall be registered in the name of Cede & Co., as nominee of DTC. The definitive Bonds shall be initially issued in the form of a single separate bond for each of the maturities thereof.

(b) With respect to Bonds registered in the name of Cede & Co., as nominee of DTC, the Town and the Paying Agent/Registrar shall have no responsibility or obligation to any DTC Participant or to any person on behalf of whom such a DTC Participant holds an interest in the Bonds. Without limiting the immediately preceding sentence, the Town and the Paying Agent/Registrar shall have no responsibility or obligation with respect to (i) the accuracy of the records of DTC, Cede & Co. or any DTC Participant with respect to any ownership interest in the Bonds, (ii) the delivery to any DTC Participant or any other person, other than an Owner, as shown on the Register, of any notice with respect to the Bonds, including any notice of redemption, or (iii) the payment to any DTC Participant or any other person, other than an Owner, as shown in the Register of any amount with respect to principal of, premium, if any, or interest on the Bonds. Notwithstanding any other provision of this Ordinance to the contrary, the Town and the Paying Agent/Registrar shall be entitled to treat and consider the person in whose name each Bond is registered in the Register as the absolute owner of such Bond for the purpose of payment of principal of, premium, if any, and interest on Bonds, for the purpose of giving notices of redemption and other matters with respect to such Bond, for the purpose of registering transfer with respect to such Bond, and for all other purposes whatsoever. The Paying Agent/Registrar shall pay all principal of, premium, if any, and interest on the Bonds only to or upon the order of the respective Owners as shown in the Register, as provided in this Ordinance, or their respective attorneys duly authorized in writing, and all such payments shall be valid and effective to fully satisfy and discharge the Town's obligations with respect to payment of,

premium, if any, and interest on the Bonds to the extent of the sum or sums so paid. No person other than an Owner, as shown in the Register, shall receive a certificate evidencing the obligation of the Town to make payments of amounts due pursuant to this Ordinance. Upon delivery by DTC to the Paying Agent/Registrar of written notice to the effect that DTC has determined to substitute a new nominee in place of Cede & Co., the word "Cede & Co." in this Ordinance shall refer to such new nominee of DTC.

(c) The Representations Letter previously executed and delivered by the Town, and applicable to the Town's obligations delivered in book-entry-only form to DTC as securities depository, is hereby ratified and approved for the Bonds.

Section 3.11. Successor Securities Depository; Transfer Outside Book-Entry-Only System.

In the event that the Town or the Paying Agent/Registrar determines that DTC is incapable of discharging its responsibilities described herein and in the Representations Letter of the Town to DTC, and that it is in the best interest of the Town and the beneficial owners of the Bonds that they be able to obtain certificated Bonds, or in the event DTC discontinues the services described herein, the Town shall (i) appoint a successor securities depository, qualified to act as such under Section 17(a) of the Securities and Exchange Act of 1934, as amended, notify DTC and DTC Participants of the appointment of such successor securities depository and transfer one or more separate Bonds to such successor securities depository; or (ii) notify DTC and DTC Participants of the availability through DTC of certificated Bonds and cause the Paying Agent/Registrar to transfer one or more separate registered Bonds to DTC Participants having Bonds credited to their DTC accounts. In such event, the Bonds shall no longer be restricted to being registered in the Register in the name of Cede & Co., as nominee of DTC, but may be registered in the name of the successor securities depository, or its nominee, or in whatever name or names Owners transferring or exchanging Bonds shall designate, in accordance with the provisions of this Ordinance.

Section 3.12. Payments to Cede & Co.

Notwithstanding any other provision of this Ordinance to the contrary, so long as the Bonds are registered in the name of Cede & Co., as nominee of DTC, all payments with respect to principal of, premium, if any, and interest on such Bonds, and all notices with respect to such Bonds shall be made and given, respectively, in the manner provided in the Representations Letter of the Town to DTC.

## ARTICLE IV

## REDEMPTION OF BONDS BEFORE MATURITY

Section 4.01. Limitation on Redemption.

The Bonds shall be subject to redemption before scheduled maturity only as provided in this Article IV.

Section 4.02. Optional Redemption.

(a) The Town reserves the option to redeem Bonds maturing on and after February 15, 2032 in whole or any part, before their respective scheduled maturity dates, on February 15, 2031 or on any date thereafter, such redemption date or dates to be fixed by the Town, at a price equal to the principal amount of the Bonds called for redemption plus accrued interest to the date fixed for redemption.

(b) If less than all of the Bonds are to be redeemed pursuant to an optional redemption, the Town shall determine the maturity or maturities and the amounts thereof to be redeemed and shall direct the Paying Agent/Registrar to call by lot the Bonds, or portions thereof, within such maturity or maturities and in such principal amounts for redemption.

(c) The Town, at least 45 days before the redemption date, unless a shorter period shall be satisfactory to the Paying Agent/Registrar, shall notify the Paying Agent/Registrar of such redemption date and of the principal amount of Bonds to be redeemed.

Section 4.03. Mandatory Sinking Fund Redemption.

(a) The Bonds maturing on February 15, in the years 20__ and 20__, (the "Term Bonds") are subject to scheduled mandatory redemption and will be redeemed by the Town, in part at a price equal to the principal amount thereof, without premium, plus accrued interest to the redemption date, out of moneys available for such purpose in the Interest and Sinking Fund, on the dates and in the respective principal amounts as set forth below.

$_____ Term Bonds Maturing February 15, 20__

| **Redemption Date** | **Redemption Amount** |
|---|---|
| February 15, 20__ | |
| February 15, 20__ | |
| *maturity | |

$_____ Term Bonds Maturing February 15, 20__

| **Redemption Date** | **Redemption Amount** |
|---|---|
| February 15, 20__ | |
| February 15, 20__ | |
| *maturity | |

(b) At least forty-five (45) days prior to each scheduled mandatory redemption date, the Paying Agent/Registrar shall select for redemption by lot, or by any other customary method that results in a random selection, a principal amount of Term Bonds equal to the aggregate principal amount of such Term Bonds to be redeemed, shall call such Term Bonds for

redemption on such scheduled mandatory redemption date, and shall give notice of such redemption, as provided in Section 4.05.

(c) The principal amount of the Term Bonds required to be redeemed on any redemption date pursuant to subparagraph (a) of this Section 4.03 shall be reduced, at the option of the Town, by the principal amount of any Term Bonds which, at least 45 days prior to the mandatory sinking fund redemption date (i) shall have been acquired by the Town at a price not exceeding the principal amount of such Term Bonds plus accrued interest to the date of purchase thereof, and delivered to the Paying Agent/Registrar for cancellation, or (ii) shall have been redeemed pursuant to the optional redemption provisions hereof and not previously credited to a mandatory sinking fund redemption.

Section 4.04. Partial Redemption.

(a) A portion of a single Certificate of a denomination greater than $5,000 may be redeemed, but only in a principal amount equal to $5,000 or any integral multiple thereof. If such a Certificate is to be partially redeemed, the Paying Agent/Registrar shall treat each $5,000 portion of the Certificate as though it were a single Certificate for purposes of selection for redemption.

(b) Upon surrender of any Certificate for redemption in part, the Paying Agent/Registrar, in accordance with Section 3.06 of this Ordinance, shall authenticate and deliver an exchange Certificate or Certificates in an aggregate principal amount equal to the unredeemed portion of the Certificate so surrendered, such exchange being without charge.

(c) The Paying Agent/Registrar shall promptly notify the Town in writing of the principal amount to be redeemed of any Certificate as to which only a portion thereof is to be redeemed.

Section 4.05. Partial Redemption.

(a) A portion of a single Bond of a denomination greater than $5,000 may be redeemed, but only in a principal amount equal to $5,000 or any integral multiple thereof. If such a Bond is to be partially redeemed, the Paying Agent/Registrar shall treat each $5,000 portion of the Bond as though it were a single Bond for purposes of selection for redemption.

(b) Upon surrender of any Bond for redemption in part, the Paying Agent/Registrar, in accordance with Section 3.06 of this Ordinance, shall authenticate and deliver an exchange Bond in an aggregate principal amount equal to the unredeemed portion of the Bond so surrendered, such exchange being without charge.

(c) The Paying Agent/Registrar shall promptly notify the Town in writing of the principal amount to be redeemed of any Bond as to which only a portion thereof is to be redeemed.

Section 4.06. Notice of Redemption to Owners.

(a) The Paying Agent/Registrar shall give notice of any redemption of Bonds by sending notice by first class United States mail, postage prepaid, not less than 30 days before the date fixed for redemption, to the Owner of each Bond (or part thereof) to be redeemed, at the address shown on the Register at the close of business on the Business Day next preceding the date of mailing such notice.

(b) The notice shall state the redemption date, the redemption price, the place at which the Bonds are to be surrendered for payment, and, if less than all the Bonds outstanding are to be redeemed, an identification of the Bonds or portions thereof to be redeemed.

(c) Any notice given as provided in this Section shall be conclusively presumed to have been duly given, whether or not the Owner receives such notice.

Section 4.07. Payment Upon Redemption.

(a) Before or on each redemption date, the Town shall deposit with the Paying Agent/Registrar money sufficient to pay all amounts due on the redemption date and the Paying Agent/Registrar shall make provision for the payment of the Bonds to be redeemed on such date by setting aside and holding in trust such amounts as are received by the Paying Agent/Registrar from the Town and shall use such funds solely for the purpose of paying the principal of, redemption premium, if any, and accrued interest on the Bonds being redeemed.

(b) Upon presentation and surrender of any Bond called for redemption at the Designated Payment/Transfer Office of the Paying Agent/Registrar on or after the date fixed for redemption, the Paying Agent/Registrar shall pay the principal of, redemption premium, if any, and accrued interest on such Bond to the date of redemption from the money set aside for such purpose.

Section 4.08. Effect of Redemption.

(a) Notice of redemption having been given as provided in Section 4.05 of this Ordinance, the Bonds or portions thereof called for redemption shall become due and payable on the date fixed for redemption and, unless the Town defaults in its obligation to make provision for the payment of the principal thereof, redemption premium, if any, or accrued interest thereon, such Bonds or portions thereof shall cease to bear interest from and after the date fixed for redemption, whether or not such Bonds are presented and surrendered for payment on such date.

(b) If the Town shall fail to make provision for payment of all sums due on a redemption date, then any Bond or portion thereof called for redemption shall continue to bear interest at the rate stated on the Bond until due provision is made for the payment of same by the Town.

Section 4.09. Conditional Notice of Redemption.

The Town reserves the right to give notice of its election or direction to redeem Bonds conditioned upon the occurrence of subsequent events. Such notice may state (i) that the

redemption is conditioned upon the deposit of moneys and/or authorized securities, in an amount equal to the amount necessary to effect the redemption, with the Paying Agent/Registrar, or such other entity as may be authorized by law, no later than the redemption date, or (ii) that the Town retains the right to rescind such notice at any time on or prior to the scheduled redemption date if the Town delivers a certificate of the Town to the Paying Agent/Registrar instructing the Paying Agent/Registrar to rescind the redemption notice and such notice and redemption shall be of no effect if such moneys and/or authorized securities are not so deposited or if the notice is rescinded. The Paying Agent/Registrar shall give prompt notice of any such rescission of a conditional notice of redemption to the affected Owners. Any Bonds subject to conditional redemption and such redemption has been rescinded shall remain Outstanding and the rescission of such redemption shall not constitute an event of default. Further, in the case of a conditional notice of redemption, the failure of the Town to make moneys and or authorized securities available in part or in whole on or before the redemption date shall not constitute an event of default.

Section 4.10. Lapse of Payment.

Money set aside for the redemption of Bonds and remaining unclaimed by the Owners of such Bonds shall be subject to the provisions of Section 3.03(f) hereof.

## ARTICLE V

## PAYING AGENT/REGISTRAR

Section 5.01. Appointment of Initial Paying Agent/Registrar.

The Bank of New York Mellon Trust Company, National Association, Dallas, Texas, is hereby appointed as the initial Paying Agent/Registrar for the Bonds.

Section 5.02. Qualifications.

Each Paying Agent/Registrar shall be a commercial bank, a trust company organized under the laws of the State of Texas, or other entity duly qualified and legally authorized to serve as and perform the duties and services of paying agent and registrar for the Bonds.

Section 5.03. Maintaining Paying Agent/Registrar.

(a) At all times while any of the Bonds are outstanding, the Town will maintain a Paying Agent/Registrar that is qualified under Section 5.02 of this Ordinance. The Mayor is hereby authorized and directed to execute an agreement with the Paying Agent/Registrar specifying the duties and responsibilities of the Town and the Paying Agent/Registrar in substantially the form presented at this meeting, such form of agreement being hereby approved. The signature of the Mayor shall be attested by the City Secretary of the Town.

(b) If the Paying Agent/Registrar resigns or otherwise ceases to serve as such, the Town will promptly appoint a replacement.

Section 5.04. Termination.

The Town, upon not less than sixty (60) days' notice, reserves the right to terminate the appointment of any Paying Agent/Registrar by delivering to the entity whose appointment is to be terminated written notice of such termination.

Section 5.05. Notice of Change to Owners.

Promptly upon each change in the entity serving as Paying Agent/Registrar, the Town will cause notice of the change to be sent to each Owner by first class United States mail, postage prepaid, at the address thereof in the Register, stating the effective date of the change and the name and mailing address of the replacement Paying Agent/Registrar.

Section 5.06. Agreement to Perform Duties and Functions.

By accepting the appointment as Paying Agent/Registrar and executing the Paying Agent/Registrar Agreement, the Paying Agent/Registrar is deemed to have agreed to the provisions of this Ordinance and that it will perform the duties and functions of Paying Agent/Registrar prescribed thereby.

Section 5.07. Delivery of Records to Successor.

If a Paying Agent/Registrar is replaced, such Paying Agent/Registrar, promptly upon the appointment of the successor, will deliver the Register (or a copy thereof) and all other pertinent books and records relating to the Bonds to the successor Paying Agent/Registrar.

## ARTICLE VI

## FORM OF THE BONDS

Section 6.01. Form Generally.

(a) The Bonds, including the Registration Certificate of the Comptroller of Public Accounts of the State of Texas, the Bond of the Paying Agent/Registrar, and the Assignment form to appear on each of the Bonds, (i) shall be substantially in the form set forth in this Article, with such appropriate insertions, omissions, substitutions, and other variations as are permitted or required by this Ordinance, and (ii) may have such letters, numbers, or other marks of identification (including identifying numbers and letters of the Committee on Uniform Securities Identification Procedures of the American Bankers Association) and such legends and endorsements (including any reproduction of an opinion of counsel) thereon as, consistently herewith, may be determined by the Town or by the officers executing such Bonds, as evidenced by their execution thereof.

(b) Any portion of the text of any Bonds may be set forth on the reverse side thereof, with an appropriate reference thereto on the face of the Bonds.

(c) The definitive Bonds, if any, shall be typewritten, photocopied, printed, lithographed, or engraved, and may be produced by any combination of these methods or

produced in any other similar manner, all as determined by the officers executing such Bonds, as evidenced by their execution thereof.

(d) The Initial Bond submitted to the Attorney General of the State of Texas may be typewritten and photocopied or otherwise reproduced.

Section 6.02. Form of the Bonds.

The form of the Bonds, including the form of the Registration Certificate of the Comptroller of Public Accounts of the State of Texas, the form of Certificate of the Paying Agent/Registrar and the form of Assignment appearing on the Bonds, shall be substantially as follows:

(a) Form of Bond.

REGISTERED REGISTERED
No. _____ $_____

United States of America
State of Texas
County of Dallas
TOWN OF ADDISON, TEXAS
GENERAL OBLIGATION REFUNDING BOND
SERIES 2022

| INTEREST RATE: | MATURITY DATE: | DELIVERY DATE: | CUSIP NUMBER: |
|---|---|---|---|
| _____% | February 15, ____ | February 16, 2022 | _____ ___ |

The Town of Addison (the "Town"), in the County of Dallas, State of Texas, for value received, hereby promises to pay to

_____

or registered assigns, on the Maturity Date specified above, the sum of

_____ DOLLARS

unless this Bond shall have been sooner called for redemption and the payment of the principal hereof shall have been provided for, and to pay interest on such principal amount from the later of Delivery Date specified above or the most recent interest payment date to which interest has been paid or provided for until payment of such principal amount has been provided for, at the per annum rate of interest specified above, computed on the basis of a 360-day year of twelve 30-day months, such interest to be paid semiannually on February 15 and August 15 of each year, commencing August 15, 2022.

The principal of this Bond shall be payable without exchange or collection charges in lawful money of the United States of America upon presentation and surrender of this Bond at the designated office in Dallas, Texas, of The Bank of New York Mellon Trust Company,

National Association, as Paying Agent/Registrar (the "Designated Payment/Transfer Office"), or, with respect to a successor paying agent/registrar, at the Designated Payment/Transfer Office of such successor Paying Agent/Registrar. Interest on this Bond is payable by check dated as of the interest payment date, and will be mailed by the Paying Agent/Registrar to the registered owner at the address shown on the registration books kept by the Paying Agent/Registrar or by such other customary banking arrangement acceptable to the Paying Agent/Registrar and the registered owner; provided, however, such registered owner shall bear all risk and expenses of such customary banking arrangement. At the option of an Owner of at least $1,000,000 principal amount of the Bonds, interest may be paid by wire transfer to the bank account of such Owner on file with the Paying Agent/Registrar. For the purpose of the payment of interest on this Bond, the registered owner shall be the person in whose name this Bond is registered at the close of business on the "Record Date," which shall be the last business day of the month next preceding such interest payment date; provided, however, that in the event of nonpayment of interest on a scheduled payment date and for 30 days thereafter, a new record date for such interest payment (a "Special Record Date") shall be established by the Paying Agent/Registrar, if and when funds for the payment of such interest have been received from the Town. Notice of the Special Record Date and of the scheduled payment date of the past due interest (the "Special Payment Date," which date shall be 15 days after the Special Record Date) shall be sent at least five business days prior to the Special Record Date by United States mail, first class, postage prepaid, to the address of each Owner of a Bond appearing on the books of the Paying Agent/Registrar at the close of business on the last business day next preceding the date of mailing of such notice.

If the date for the payment of the principal of or interest on this Bond shall be a Saturday, Sunday, legal holiday, or day on which banking institutions in the city where the Designated Payment/Transfer Office of the Paying Agent/Registrar is located are required or authorized by law or executive order to close, the date for such payment shall be the next succeeding day that is not a Saturday, Sunday, legal holiday, or day on which banking institutions are required or authorized to close, and payment on such date shall have the same force and effect as if made on the original date payment was due and no additional interest shall be due by reason of nonpayment on the date on which such payment is otherwise stated to be due and payable.

This Bond is dated January 1, 2022 and is one of a series of fully registered bonds specified in the title hereof issued in the aggregate principal amount of $_____ (herein referred to as the "Bonds"), issued pursuant to a certain ordinance of the Town (the "Ordinance") for the purpose of refunding a portion of the Town's outstanding debt and to pay the costs and expenses associated with issuing the Bonds.

The Town has reserved the option to redeem the Bonds maturing on or after February 15, 2031, in whole or in part, before their respective scheduled maturity dates, on February 15, 2030, or on any date thereafter, at a price equal to the principal amount of the Bonds so called for redemption plus accrued interest to the date fixed for redemption. If less than all of the Bonds are to be redeemed, the Town shall determine the maturity or maturities and the amounts thereof to be redeemed and shall direct the Paying Agent/Registrar to call by lot or other customary method that results in a random selection the Bonds, or portions thereof, within such maturity and in such principal amounts, for redemption.

(b) The Bonds maturing on February 15, in the years 20__ and 20__, (the "Term Bonds") are subject to scheduled mandatory redemption and will be redeemed by the Town, in part at a price equal to the principal amount thereof, without premium, plus accrued interest to the redemption date, out of moneys available for such purpose in the Interest and Sinking Fund, on the dates and in the respective principal amounts as set forth below.

$_____ Term Bonds Maturing February 15, 20__

| **Redemption Date** | **Redemption Amount** |
|---|---|
| February 15, 20__ | |
| February 15, 20__ | |
| *maturity | |

$_____ Term Bonds Maturing February 15, 20__

| **Redemption Date** | **Redemption Amount** |
|---|---|
| February 15, 20__ | |
| February 15, 20__ | |
| *maturity | |

At least forty-five (45) days prior to each scheduled mandatory redemption date, the Paying Agent/Registrar shall select for redemption by lot, or by any other customary method that results in a random selection, a principal amount of Term Bonds equal to the aggregate principal amount of such Term Bonds to be redeemed, shall call such Term Bonds for redemption on such scheduled mandatory redemption date, and shall give notice of such redemption, as provided in the Ordinance.

In lieu of calling the Term Bonds described above, for mandatory redemption, the Town reserves the right to purchase such Term Bonds at a price not exceeding the principal amount thereof, plus accrued interest, with (a) moneys on deposit in the Interest and Sinking Fund which are available for the mandatory redemption of such Term Bonds or (b) other lawfully available funds.

Upon any such purchase in lieu of redemption, not less than five (5) days prior to a mandatory redemption date, the Town shall deliver such Term Bonds to the Paying Agent/Registrar prior to the selection of the Term Bonds for redemption and the principal amount so delivered shall be credited against the amount required to be called for redemption in that year.

Notice of such redemption or redemptions shall be given by first class mail, postage prepaid, not less than 30 days before the date fixed for redemption, to the registered owner of each of the Bonds to be redeemed in whole or in part. Notice having been so given, the Bonds or portions thereof designated for redemption shall become due and payable on the redemption date specified in such notice; from and after such date, notwithstanding that any of the Bonds or

portions thereof so called for redemption shall not have been surrendered for payment, interest on such Bonds or portions thereof shall cease to accrue.

The Town reserves the right to give notice of its election or direction to redeem Bonds conditioned upon the occurrence of subsequent events. Such notice may state (i) that the redemption is conditioned upon the deposit of moneys and/or authorized securities, in an amount equal to the amount necessary to effect the redemption, with the Paying Agent/Registrar, or such other entity as may be authorized by law, no later than the redemption date, or (ii) that the Town retains the right to rescind such notice at any time on or prior to the scheduled redemption date if the Town delivers a certificate of the Town to the Paying Agent/Registrar instructing the Paying Agent/Registrar to rescind the redemption notice and such notice and redemption shall be of no effect if such moneys and/or authorized securities are not so deposited or if the notice is rescinded. The Paying Agent/Registrar shall give prompt notice of any such rescission of a conditional notice of redemption to the affected Owners. Any Bonds subject to conditional notice of redemption and such redemption has been rescinded shall remain Outstanding and the rescission of such redemption shall not constitute an event of default. Further, in the case of a conditional redemption, the failure of the Town to make moneys and or authorized securities available in part or in whole on or before the redemption date shall not constitute an event of default.

As provided in the Ordinance, and subject to certain limitations therein set forth, this Bond is transferable upon surrender of this Town for transfer at the Designated Payment/Transfer Office of the Paying Agent/Registrar with such endorsement or other evidence of transfer as is acceptable to the Paying Agent/Registrar; thereupon, one or more new fully registered Bonds of the same stated maturity, of authorized denominations, bearing the same rate of interest, and for the same aggregate principal amount will be issued to the designated transferee or transferees.

Neither the Town nor the Paying Agent/Registrar shall be required to issue, transfer or exchange any Bond called for redemption where such redemption is scheduled to occur within 45 calendar days of the date fixed for redemption; provided, however, such limitation shall not be applicable to an exchange by the registered owner of the uncalled principal balance of a Bond.

The Town, the Paying Agent/Registrar, and any other person may treat the person in whose name this Bond is registered as the owner hereof for the purpose of receiving payment as herein provided (except interest shall be paid to the person in whose name this Bond is registered on the Record Date, or the Special Record Date, as applicable) and for all other purposes, whether or not this Bond be overdue, and neither the Town nor the Paying Agent/Registrar shall be affected by notice to the contrary.

IT IS HEREBY CERTIFIED AND RECITED that the issuance of this Bond and the series of which it is a part is duly authorized by law, and has been authorized by a vote of the properly qualified electors of the Town; that all acts, conditions and things required to be done precedent to and in the issuance of the Bonds have been properly done and performed and have happened in regular and due time, form and manner, as required by law; and that ad valorem taxes upon all taxable property in the Town have been levied for and pledged to the payment of the debt service requirements of the Bonds, within the limit prescribed by law; and that the total

indebtedness of the Town, including the Bonds, does not exceed any constitutional or statutory limitation.

IN WITNESS WHEREOF, the Town has caused this Bond to be executed by the manual or facsimile signature of the Mayor of the Town and countersigned by the manual or facsimile signature of the City Secretary, and the official seal of the Town has been duly impressed or placed in facsimile on this Bond.

_____
Mayor, Town of Addison, Texas

_____
City Secretary,
Town of Addison, Texas

[SEAL]

(c) Form of Comptroller's Registration Certificate. The following Comptroller's Registration Certificate may be deleted from the definitive Bonds if such certificate on the Initial Bond is fully executed.

| | | |
|---|---|---|
| OFFICE OF THE COMPTROLLER | § | |
| OF PUBLIC ACCOUNTS | § | REGISTER NO. _____ |
| OF THE STATE OF TEXAS | § | |

I hereby certify that there is on file and of record in my office a certificate of the Attorney General of the State of Texas to the effect that this Bond has been examined by him as required by law, that he finds that it has been issued in conformity with the Constitution and laws of the State of Texas, and that it is a valid and binding obligation of the Town of Addison, Texas; and that this Bond has this day been registered by me.

Witness my hand and seal of office at Austin, Texas, _____.

_____
Comptroller of Public Accounts
of the State of Texas

(d) Form of Certificate of Paying Agent/Registrar. The following Certificate of Paying Agent/Registrar may be deleted from each Initial Bond if the Comptroller's Registration Certificate appears thereon.

CERTIFICATE OF PAYING AGENT/REGISTRAR

The records of the Paying Agent/Registrar show that the Initial Bond of this series of Bonds was approved by the Attorney General of the State of Texas and registered by the Comptroller of Public Accounts of the State of Texas, and that this is one of the Bonds referred to in the within-mentioned Ordinance.

THE BANK OF NEW YORK MELLON
TRUST COMPANY,
NATIONAL ASSOCIATION,
as Paying Agent/Registrar

Dated: _____

By: _____
Authorized Signatory

(e) Form of Assignment.

ASSIGNMENT

FOR VALUE RECEIVED, the undersigned hereby sells, assigns, and transfers unto (print or typewrite name, address and Zip Code of transferee): _____
_____
_____
(Social Security or other identifying number: _____) the within Bond and all rights hereunder and hereby irrevocably constitutes and appoints _____ attorney to transfer the within Bond on the books kept for registration hereof, with full power of substitution in the premises.

Dated: _____

_____

Signature Guaranteed By:

_____

_____
Authorized Signatory

NOTICE: The Signature on this Assignment must correspond with the name of the registered owner as it appears on the face of the within Bond in every particular and must be guaranteed in a manner acceptable to the Paying Agent/Registrar.

(f) The Initial Bond shall be in the form set forth in subsections (a) through (d) of this Section, except for the following alterations:

(i) immediately under the name of the Bond, the headings "INTEREST RATE," and "MATURITY DATE" shall both be completed with the words "As Shown Below" and the words "CUSIP NO." shall be deleted;

(ii) in the first paragraph of the Bond, the words "on the Maturity Date specified above, the sum of _____ DOLLARS" shall be deleted and the following will be inserted: "on the fifteenth day of February in the years, in the principal installments and bearing interest at the per annum rates set forth in the following schedule:

| Year | Principal Amount | Interest Rate |
|---|---|---|

(Information to be inserted from Section 3.02(c) hereof).

(iii) the Initial Bond shall be numbered T-1.

Section 6.03. CUSIP Registration.

The Town may secure identification numbers through the CUSIP Service Bureau managed by S & P Global IQ behalf of the American Bankers Association, and may authorize the printing of such numbers on the face of the Bonds. It is expressly provided, however, that the presence or absence of CUSIP numbers on the Bonds shall be of no significance or effect in regard to the legality thereof and neither the Town nor the attorneys approving said Bonds as to legality are to be held responsible for CUSIP numbers incorrectly printed on the Bonds.

Section 6.04. Legal Opinion.

The approving legal opinion of Bracewell LLP, Bond Counsel, may be attached to or printed on the reverse side of each Bond over the certification of the City Secretary of the Town, which may be executed in facsimile.

Section 6.05. Statement Insurance.

A statement relating to a municipal bond insurance policy, if any, to be issued for the Bonds, may be printed on each Bond.

## ARTICLE VII

## SALE AND DELIVERY OF BONDS; DEPOSIT OF PROCEEDS; FLOW OF FUNDS

Section 7.01. Sale of Bonds; Official Statement.

(a) The Bonds, having been duly advertised and offered for sale at competitive bid, are hereby officially sold and awarded to _____ (the "Purchaser") for a purchase price equal to the principal amount thereof, minus an original issue discount in the amount of $_____, being the bid which produced the lowest true interest cost to the Town. The Initial Bond shall be registered in the name of the Purchaser or its designee.

(b) The form and substance of the Preliminary Official Statement and any addenda, supplement or amendment thereto, are hereby in all respects approved and adopted and is hereby deemed final as of its date within the meaning and for the purposes of paragraph (b)(1) of Rule

15c2-12 under the Securities Exchange Act of 1934, as amended. The Mayor and City Secretary are hereby authorized and directed to cause to be prepared a final Official Statement (the "Official Statement") incorporating applicable pricing information pertaining to the Bonds, and to execute the same by manual or facsimile signature and deliver appropriate numbers of executed copies thereof to the Purchaser. The Official Statement as thus approved and delivered, with such appropriate variations as shall be approved by the Mayor and the Purchaser, may be used by the Purchaser in the public offering and sale thereof. The City Secretary is hereby authorized and directed to include and maintain a copy of the Official Statement and any addenda, supplement or amendment thereto thus approved among the permanent records of this meeting. The use and distribution of the Preliminary Official Statement, and the preliminary public offering of the Bonds by the Purchaser, is hereby ratified, approved and confirmed.

(c) All officers of the Town are authorized to execute such documents, certificates and receipts as they may deem appropriate in order to consummate the delivery of the Bonds in accordance with the terms of sale therefor. Further, in connection with the submission of the record of proceedings for the Bonds to the Attorney General of the State of Texas for examination and approval of such Bonds, the appropriate officer of the Town is hereby authorized and directed to issue a check of the Town payable to the Attorney General of the State of Texas as a nonrefundable examination fee in the amount required by Chapter 1202, Texas Government Code (such amount per series to be the lesser of (i) 1/10th of 1% of the principal amount of such series of the Bonds or (ii) $9,500.)

(d) The obligation of the Purchaser to accept delivery of the Bonds is subject to the Purchaser being furnished with the final, approving opinion of Bracewell LLP, bond counsel for the Town, which opinion shall be dated and delivered the Closing Date.

Section 7.02. Control and Delivery of Bonds.

(a) The Mayor of the Town is hereby authorized to have control of the Initial Bond and all necessary records and proceedings pertaining thereto pending investigation, examination, and approval of the Attorney General of the State of Texas, registration by the Comptroller of Public Accounts of the State of Texas and registration with, and initial exchange or transfer by, the Paying Agent/Registrar.

(b) After registration by the Comptroller of Public Accounts, delivery of the Bonds shall be made to the Purchaser or a representative thereof under and subject to the general supervision and direction of the Mayor, against receipt by the Town of all amounts due to the Town under the terms of sale.

(c) In the event the Mayor or City Secretary is absent or otherwise unable to execute any document or take any action authorized herein, the Mayor Pro Tem and the Assistant City Secretary, respectively, shall be authorized to execute such documents and take such actions, and the performance of such duties by the Mayor Pro Tem and the Assistant City Secretary shall for the purposes of this Ordinance have the same force and effect as if such duties were performed by the Mayor and City Secretary, respectively.

ARTICLE VIII

CREATION OF FUNDS AND ACCOUNTS;
DEPOSIT OF PROCEEDS; INVESTMENTS

Section 8.01. Creation of Funds.

(a) The Town hereby establishes the following special funds or accounts:

(i) The Town of Addison, Texas, General Obligation Refunding Bonds, Series 2022, Interest and Sinking Fund

(b) This fund or account shall be maintained at an official depository of the Town.

Section 8.02. Interest and Sinking Fund.

(a) The taxes levied under Section 2.01 shall be deposited to the credit of the Interest and Sinking Fund at such times and in such amounts as necessary for the timely payment of the principal of and interest on the Bonds.

(b) If the amount of money in the Interest and Sinking Fund is at least equal to the aggregate principal amount of the outstanding Bonds plus the aggregate amount of interest due and that will become due and payable on such Bonds, no further deposits to that fund need be made.

(c) Money on deposit in the Interest and Sinking Fund shall be used to pay the principal of and interest on the Bonds as such become due and payable.

Section 8.03. Security of Funds.

All moneys on deposit in the funds referred to in this Ordinance shall be secured in the manner and to the fullest extent required by the laws of the State of Texas for the security of public funds, and moneys on deposit in such funds shall be used only for the purposes permitted by this Ordinance.

Section 8.04. Deposit of Proceeds.

(a) Proceeds of the Bonds in the amount of $_____, shall be deposited with the Paying Agent/Registrar for the Refunded Obligations pursuant to the Deposit Agreement, and, to the extent not otherwise provided for, to pay all expenses arising in connection with the refunding of the Refunded Obligations.

(b) The remaining proceeds of the Bonds shall be deposited to a special fund, such moneys to be dedicated and used for paying the costs of issuance. Any amounts remaining after the payment of the costs of issuance shall be deposited to the Interest and Sinking Fund.

Section 8.05. Investments.

(a) Money in the Interest and Sinking Fund created by this Ordinance, at the option of the Town, may be invested in such securities or obligations as permitted under applicable law.

(b) Any securities or obligations in which such money is so invested shall be kept and held in trust for the benefit of the Owners and shall be sold and the proceeds of sale shall be timely applied to the making of all payments required to be made from the fund from which the investment was made.

Section 8.06. Investment Income.

(a) Interest and income derived from investment of the Interest and Sinking Fund be credited to such fund.

(b) Interest and income derived from investment of the funds to be deposited pursuant to Section 7.03(b) hereof shall be credited to the account where deposited until the acquisition or construction of said projects is completed and thereafter, to the extent such interest and income are present, such interest and income shall be deposited to the Interest and Sinking Fund.

## ARTICLE IX

## PARTICULAR REPRESENTATIONS AND COVENANTS

Section 9.01. Payment of the Bonds.

On or before each Interest Payment Date for the Bonds and while any of the Bonds are outstanding and unpaid, there shall be made available to the Paying Agent/Registrar, out of the Interest and Sinking Fund, money sufficient to pay such interest on and principal of, redemption premium, if any, and interest on the Bonds as will accrue or mature on the applicable Interest Payment Date, maturity date and, if applicable, on a date of prior redemption.

Section 9.02. Other Representations and Covenants.

(a) The Town will faithfully perform, at all times, any and all covenants, undertakings, stipulations, and provisions contained in this Ordinance and in each Bond; the Town will promptly pay or cause to be paid the principal of, redemption premium, if any, and interest on each Bond on the dates and at the places and manner prescribed in such Bond; and the Town will, at the times and in the manner prescribed by this Ordinance, deposit or cause to be deposited the amounts of money specified by this Ordinance.

(b) The Town is duly authorized under the laws of the State of Texas to issue the Bonds; all action on its part for the creation and issuance of the Bonds has been duly and effectively taken; and the Bonds in the hands of the Owners thereof are and will be valid and enforceable obligations of the Town in accordance with their terms.

Section 9.03. Federal Income Tax Matters.

(a) General. The Town covenants not to take any action or omit to take any action that, if taken or omitted, would cause the interest on the Bonds to be includable in gross income for federal income tax purposes. In furtherance thereof, the Town covenants to comply with sections 103 and 141 through 150 of the Code and the provisions set forth in the Federal Tax Certificate executed by the Town in connection with the Bonds.

(b) No Private Activity Bonds. The Town covenants that it will use the proceeds of the Bonds (including investment income) and the property financed, directly or indirectly, with such proceeds so that the Bonds will not be "private activity bonds" within the meaning of section 141 of the Code. Furthermore, the Town will not take a deliberate action (as defined in section 1.141-2(d)(3) of the Regulations) that causes the Bonds to be a "private activity bond" unless it takes a remedial action permitted by section 1.141-12 of the Regulations.

(c) No Federal Guarantee. The Town covenants not to take any action or omit to take any action that, if taken or omitted, would cause the Bonds to be "federally guaranteed" within the meaning of section 149(b) of the Code, except as permitted by section 149(b)(3) of the Code.

(d) No Hedge Bonds. The Town covenants not to take any action or omit to take action that, if taken or omitted, would cause the Bonds to be "hedge bonds" within the meaning of section 149(g) of the Code.

(e) No Arbitrage Bonds. The Town covenants that it will make such use of the proceeds of the Bonds (including investment income) and regulate the investment of such proceeds of the Bonds so that the Bonds will not be "arbitrage bonds" within the meaning of section 148(a) of the Code.

(f) Required Rebate. The Town covenants that, if the Town does not qualify for an exception to the requirements of section 148(f) of the Code, the Town will comply with the requirement that certain amounts earned by the Town on the investment of the gross proceeds of the Bonds, be rebated to the United States.

(g) Information Reporting. The Town covenants to file or cause to be filed with the Secretary of the Treasury an information statement concerning the Bonds in accordance with section 149(e) of the Code.

(h) Record Retention. The Town covenants to retain all material records relating to the expenditure of the proceeds (including investment income) of the Bonds and the use of the property financed, directly or indirectly, thereby until three years after the last Bond is redeemed or paid at maturity (or such other period as provided by subsequent guidance issued by the Department of the Treasury) in a manner that ensures their complete access throughout such retention period.

(i) Registration. If the Bonds are "registration-required bonds" under section 149(a)(2) of the Code, the Bonds will be issued in registered form.

(j) Favorable Opinion of Bond Counsel. Notwithstanding the foregoing, the Town will not be required to comply with any of the federal tax covenants set forth above if the Town has received an opinion of nationally recognized bond counsel that such noncompliance will not adversely affect the excludability of interest on the Bonds from gross income for federal income tax purposes.

(k) Continuing Compliance. Notwithstanding any other provision of this Ordinance, the Town's obligations under the federal tax covenants set forth above will survive the defeasance and discharge of the Bonds for as long as such matters are relevant to the excludability of interest on the Bonds from gross income for federal income tax purposes.

(l) Official Intent. For purposes of section 1.150-2(d) of the Regulations, to the extent that an official intent to reimburse has not previously been adopted by the Town, this Ordinance serves as the Town's official declaration of intent to use proceeds of the Bonds to reimburse itself from proceeds of the Bonds issued in the maximum amount authorized by this Ordinance for certain expenditures paid in connection with the projects set forth herein. Any such reimbursement will only be made (i) for an original expenditure paid no earlier than 60 days prior to the date hereof and (ii) not later than 18 months after the later of (A) the date the original expenditure is paid or (B) the date the project to which such expenditure relates is placed in service or abandoned, but in to event more than three years after the original expenditure is paid.

Section 9.04. No Private Use or Payment and No Private Loan Financing.

The Town covenants and agrees that it will make such use of the proceeds of the Bonds, including interest or other investment income derived from Bond proceeds, regulate the use of property financed, directly or indirectly, with such proceeds, and take such other and further action as may be required so that the Bonds will not be "private activity bonds" within the meaning of section 141 of the Code. Moreover, the Town will certify, through an authorized officer, employee or agent, that, based upon all facts and estimates known or reasonably expected to be in existence on the date the Bonds are delivered, the proceeds of the Bonds will not be used in a manner that would cause the Bonds to be "private activity bonds" within the meaning of section 141 of the Code.

Section 9.05. No Federal Guaranty.

The Town covenants and agrees not to take any action, or knowingly omit to take any action within its control, that, if taken or omitted, respectively, would cause the Bonds to be "federally guaranteed" within the meaning of section 149(b) of the Code, except as permitted by section 149(b)(3) of the Code.

Section 9.06. No Hedge Bonds.

The Town covenants and agrees not to take any action, or knowingly omit to take any action, within its control, that, if taken or omitted, respectively, would cause the Bonds to be "hedge bonds" within the meaning of section 149(g) of the Code.

Section 9.07. No Arbitrage.

The Town covenants and agrees that it will make such use of the proceeds of the Bonds, including interest or other investment income derived from Bond proceeds, regulate investments of proceeds of the Bonds, and take such other and further action as may be required so that the Bonds will not be "arbitrage bonds" within the meaning of section 148(a) of the Code. Moreover, the Town will certify, through an authorized officer, employee or agent, based upon all facts and estimates known or reasonably expected to be in existence on the date the Bonds are delivered, that the proceeds of the Bonds will not be used in a manner that would cause the Bonds to be "arbitrage bonds" within the meaning of section 148(a) of the Code.

Section 9.08. Arbitrage Rebate.

If the Town does not qualify for an exception to the requirements of section 148(f) of the Code relating to the required rebate to the United States, the Town will take all necessary steps to comply with the requirement that certain amounts earned by the Town on the investment of the "gross proceeds" of the Bonds (within the meaning of section 148(f)(6)(B) of the Code), be rebated to the federal government. Specifically, the Town will (i) maintain records regarding the investment of the gross proceeds of the Bonds as may be required to calculate the amount earned on the investment of the gross proceeds of the Bonds separately from records of amounts on deposit in the funds and accounts of the Town allocable to other Bond issues of the Town or moneys that do not represent gross proceeds of any bond issues of the Town, (ii) determine at such times as are required by the applicable Regulations, the amount earned from the investment of the gross proceeds of the Bonds that is required to be rebated to the federal government, and (iii) pay, not less often than every fifth anniversary date of the delivery of the Bonds, or on such other dates as may be permitted under applicable Regulations, all amounts required to be rebated to the federal government. Further, the Town will not indirectly pay any amount otherwise payable to the federal government pursuant to the foregoing requirements to any person other than the federal government by entering into any investment arrangement with respect to the gross proceeds of the Bonds that might result in a reduction in the amount required to be paid to the federal government because such arrangement results in a smaller profit or a larger loss than would have resulted if the arrangement had been at arm's length and had the yield on the issue not been relevant to either party.

Section 9.09. Information Reporting.

The Town covenants and agrees to file or cause to be filed with the Secretary of the Treasury, not later than the 15th day of the second calendar month after the close of the calendar quarter in which the Bonds are issued, an information statement concerning the Bonds, all under and in accordance with section 149(e) of the Code.

Section 9.10. Record Retention.

The Town will retain all pertinent and material records relating to the use and expenditure of the proceeds of the Bonds until three years after the last Bond is redeemed or paid at maturity, or such shorter period as authorized by subsequent guidance issued by the Department of the Treasury, if applicable. All records will be kept in a manner that ensures their complete access

throughout the retention period. For this purpose, it is acceptable that such records are kept either as hardcopy books and records or in an electronic storage and retrieval system, provided that such electronic system includes reasonable controls and quality assurance programs that assure the ability of the Town to retrieve and reproduce such books and records in the event of an examination of the Bonds by the Internal Revenue Service.

Section 9.11. Registration.

The Bonds will be issued in registered form.

Section 9.12. Deliberate Actions.

The Town will not take a deliberate action (as defined in section 1.141-2(d)(3) of the Regulations) that causes the Bonds to fail to meet any requirement of section 141 of the Code after the issue date of the Bonds unless an appropriate remedial action is permitted by section 1.141-12 of the Regulations, the Town takes such remedial action, and a Counsel's Opinion is obtained that such remedial action cures any failure to meet the requirements of section 141 of the Code.

Section 9.13. Continuing Obligation.

Notwithstanding any other provision of this Ordinance, the Town's obligations under the covenants and provisions of Sections 9.03 through 9.13, inclusive, shall survive the defeasance and discharge of the Bonds for as long as such matters are relevant to the excludability of interest on the Bonds from gross income for federal income tax purposes.

## ARTICLE X

## DEFAULT AND REMEDIES

Section 10.01. Events of Default.

Each of the following occurrences or events for the purpose of this Ordinance is hereby declared to be an Event of Default:

(i) the failure to make payment of the principal of, redemption premium, if any, or interest on any of the Bonds when the same becomes due and payable; or

(ii) default in the performance or observance of any other covenant, agreement, or obligation of the Town, which default materially and adversely affects the rights of the Owners, including but not limited to their prospect or ability to be repaid in accordance with this Ordinance, and the continuation thereof for a period of sixty (60) days after notice of such default is given by any Owner to the Town.

Section 10.02. Remedies for Default.

(a) Upon the happening of any Event of Default, then any Owner or an authorized representative thereof, including but not limited to a trustee or trustees therefor, may proceed

against the Town for the purpose of protecting and enforcing the rights of the Owners under this Ordinance by mandamus or other suit, action or special proceeding in equity or at law in any court of competent jurisdiction for any relief permitted by law, including the specific performance of any covenant or agreement contained herein, or thereby to enjoin any act or thing that may be unlawful or in violation of any right of the Owners hereunder or any combination of such remedies.

(b) It is provided that all such proceedings shall be instituted and maintained for the equal benefit of all Owners of Bonds then outstanding.

Section 10.03. Remedies Not Exclusive.

(a) No remedy herein conferred or reserved is intended to be exclusive of any other available remedy, but each and every such remedy shall be cumulative and shall be in addition to every other remedy given hereunder or under the Bonds or now or hereafter existing at law or in equity; provided, however, that notwithstanding any other provision of this Ordinance, the right to accelerate the debt evidenced by the Bonds shall not be available as a remedy under this Ordinance.

(b) The exercise of any remedy herein conferred or reserved shall not be deemed a waiver of any other available remedy.

## ARTICLE XI

## DISCHARGE

Section 11.01. Discharge.

The Bonds may be defeased, discharged or refunded in any manner permitted by applicable law.

## ARTICLE XII

## CONTINUING DISCLOSURE UNDERTAKING

Section 12.01. Annual Reports.

(a) The Town shall provide annually to the MSRB, (1) within six months after the end of each fiscal year of the Town, financial information and operating data with respect to the Town of the general type included in the final Official Statement, being information described in the Tables numbered 1 through 6 and 8 through 15, including financial statements of the Town if audited financial statements of the Town are then available, and (2) if not provided as part such financial information and operating data, audited financial statements of the Town, when and if available. Any financial statements to be provided shall be (i) prepared in accordance with the accounting principles appended to the Official Statement, or such other accounting principles as the Town may be required to employ from time to time pursuant to state law or regulation, and (ii) audited, if the Town commissions an audit of such financial statements and the audit is completed within the period during which they must be provided. If the audit of such financial

statements is not complete within 12 months after any such fiscal year end, then the Town shall file unaudited financial statements within such 12-month period and audited financial statements for the applicable fiscal year, when and if the audit report on such statements becomes available.

(b) If the Town changes its fiscal year, it will notify the MSRB of the change (and of the date of the new fiscal year end) prior to the next date by which the Town otherwise would be required to provide financial information and operating data pursuant to this Section.

(c) The financial information and operating data to be provided pursuant to this Section may be set forth in full in one or more documents or may be included by specific referenced to any document (including an official statement or other offering document, if it is available from the MSRB) that theretofore has been provided to the MSRB or filed with the SEC.

Section 12.02. Material Event Notices.

(a) The Town shall notify the MSRB, in a timely manner not in excess of ten (10) Business Days after the occurrence of the event, of any of the following events with respect to the Bonds:

(i) Principal and interest payment delinquencies;

(ii) Non-payment related defaults, if material;

(iii) Unscheduled draws on debt service reserves reflecting financial difficulties;

(iv) Unscheduled draws on credit enhancements reflecting financial difficulties;

(v) Substitution of credit or liquidity providers, or their failure to perform;

(vi) Adverse tax opinions, the issuance by the Internal Revenue Service of proposed or final determinations of taxability, Notices of Proposed Issue (IRS Form 5701-TEB) or other material notices or determinations with respect to the tax status of the Bonds, or other material events affecting the tax status of the Bonds;

(vii) Modifications to rights of holders of the Bonds, if material;

(viii) Bond calls, if material, and tender offers;

(ix) Defeasances;

(x) Release, substitution, or sale of property securing repayment of the Bonds, if material;

(xi) Rating changes;

(xii) Bankruptcy, insolvency, receivership or similar event of the Town;

(xiii) The consummation of a merger, consolidation, or acquisition involving the Town or the sale of all or substantially all of the assets of the Town, other than in the ordinary course of business, the entry into a definitive agreement to undertake such an action or the termination of a definitive agreement relating to any such actions, other than pursuant to its terms, if material; and

(xiv) Appointment of a successor Paying Agent/Registrar or change in the name of the Paying Agent/Registrar, if material.

(xv) incurrence of a financial obligation of the Town, if material, or agreement to covenants, events of default, remedies, priority rights, or other similar terms of a financial obligation of the Town, any of which affect security holders, if material; and

(xvi) default, event of acceleration, termination event, modification of terms, or other similar events under the terms of a financial obligation of the Town, any of which reflect financial difficulties.

For these purposes, any event described in the immediately preceding clause (xii) is considered to occur when any of the following occur: the appointment of a receiver, fiscal agent, or similar officer for the Town in a proceeding under the United States Bankruptcy Code or in any other proceeding under state or federal law in which a court or governmental authority has assumed jurisdiction over substantially all of the assets or business of the Town, or if such jurisdiction has been assumed by leaving the existing governing body and officials or officers in possession but subject to the supervision and orders of a court or governmental authority, or the entry of an order confirming a plan of reorganization, arrangement, or liquidation by a court or governmental authority having supervision or jurisdiction over substantially all of the assets of business of the Town; and the Town intends the words used in the immediately preceding paragraphs (xv) and (xvi) and the definition of financial obligations in those sections to have the same meanings as when they are used in rule and sec release no. 34-83885, dated August 20, 2018.

(b) The Town shall provide to the MSRB, in an electronic format as prescribed by the MSRB, in a timely manner, notice of a failure by the Town to provide required annual financial information and notices of material events in accordance with Sections 12.01 and 12.02. All documents provided to the MSRB pursuant to this Section shall be accompanied by identifying information as prescribed by the MSRB.

Section 12.03. Limitations, Disclaimers and Amendments.

(a) The Town shall be obligated to observe and perform the covenants specified in this Article for so long as, but only for so long as, the Town remains an "obligated person" with respect to the Bonds within the meaning of the Rule, except that the Town in any event will give notice of any redemption calls and any defeasances that cause the Town to be no longer an "obligated person."

(b) The provisions of this Article are for the sole benefit of the Owners and beneficial owners of the Bonds, and nothing in this Article, express or implied, shall give any benefit or any legal or equitable right, remedy, or claim hereunder to any other person. The Town undertakes

to provide only the financial information, operating data, financial statements, and notices which it has expressly agreed to provide pursuant to this Article and does not hereby undertake to provide any other information that may be relevant or material to a complete presentation of the Town's financial results, condition, or prospects or hereby undertake to update any information provided in accordance with this Article or otherwise, except as expressly provided herein. The Town does not make any representation or warranty concerning such information or its usefulness to a decision to invest in or sell Bonds at any future date.

UNDER NO CIRCUMSTANCES SHALL THE TOWN BE LIABLE TO THE OWNER OR BENEFICIAL OWNER OF ANY BOND OR ANY OTHER PERSON, IN CONTRACT OR TORT, FOR DAMAGES RESULTING IN WHOLE OR IN PART FROM ANY BREACH BY THE TOWN, WHETHER NEGLIGENT OR WITHOUT FAULT ON ITS PART, OF ANY COVENANT SPECIFIED IN THIS ARTICLE, BUT EVERY RIGHT AND REMEDY OF ANY SUCH PERSON, IN CONTRACT OR TORT, FOR OR ON ACCOUNT OF ANY SUCH BREACH SHALL BE LIMITED TO AN ACTION FOR MANDAMUS OR SPECIFIC PERFORMANCE.

(c) No default by the Town in observing or performing its obligations under this Article shall constitute a breach of or default under the Ordinance for purposes of any other provisions of this Ordinance.

(d) Nothing in this Article is intended or shall act to disclaim, waive, or otherwise limit the duties of the Town under federal and state securities laws.

(e) The provisions of this Article may be amended by the Town from time to time to adapt to changed circumstances that arise from a change in legal requirements, a change in law, or a change in the identity, nature, status, or type of operations of the Town, but only if (i) the provisions of this Article, as so amended, would have permitted an underwriter to purchase or sell Bonds in the primary offering of the Bonds in compliance with the Rule, taking into account any amendments or interpretations of the Rule to the date of such amendment, as well as such changed circumstances, and (ii) either (A) the Owners of a majority in aggregate principal amount (or any greater amount required by any other provisions of this Ordinance that authorizes such an amendment) of the Outstanding Bonds consent to such amendment or (B) an entity or individual person that is unaffiliated with the Town (such as nationally recognized bond counsel) determines that such amendment will not materially impair the interests of the Owners and beneficial owners of the Bonds. If the Town so amends the provisions of this Article, it shall include with any amended financial information or operating data next provided in accordance with Section 12.01 an explanation, in narrative form, of the reasons for the amendment and of the impact of any change in type of financial information or operating data so provide.

## ARTICLE XIII

## AMENDMENTS

Section 13.01. Amendments.

This Ordinance shall constitute a contract with the Owners, be binding on the Town, and shall not be amended or repealed by the Town so long as any Bond remains outstanding except as permitted in this Section. The Town may, without consent of or notice to any Owners, from time to time and at any time, amend this Ordinance in any manner not detrimental to the interests of the Owners, including the curing of any ambiguity, inconsistency, or formal defect or omission herein. In addition, the Town may, with the written consent of the Owners of the Bonds holding a majority in aggregate principal amount of the Bonds then outstanding, amend, add to, or rescind any of the provisions of this Ordinance; provided that, without the consent of all Owners of outstanding Bonds, no such amendment, addition, or rescission shall (i) extend the time or times of payment of the principal of and interest on the Bonds, reduce the principal amount thereof, the redemption price, or the rate of interest thereon, or in any other way modify the terms of payment of the principal of or interest on the Bonds, (ii) give any preference to any Bond over any other Bond, or (iii) reduce the aggregate principal amount of Bonds required to be held by Owners for consent to any such amendment, addition, or rescission.

## ARTICLE XIV

## MISCELLANEOUS

Section 14.01. Changes to Ordinance.

The Mayor and Director of Finance, in consultation with Bond Counsel, are hereby authorized to make changes to the terms of this Ordinance if necessary or desirable to carry out the purposes hereof or in connection with the approval of the issuance of the Bonds by the Attorney General of Texas.

Section 14.02. Partial Invalidity.

If any section, paragraph, clause or provision of this Ordinance shall for any reason be held to be invalid or unenforceable, the invalidity or unenforceability of such section, paragraph, clause or provision shall not affect any of the remaining provisions of the Ordinance.

Section 14.03. No Personal Liability.

No recourse shall be had for payment of the principal of or interest on any Bonds or for any claim based thereon, or on this Ordinance, against any official or employee of the Town or any person executing any Bonds.

## ARTICLE XV

## REDEMPTION OF REFUNDED OBLIGATIONS; DEPOSIT AGREEMENT; PURCHASE OF SECURITIES

Section 15.01. Payment of Paying Agent.

Prior to the Closing Date, the Town shall ascertain from the paying agent for the Refunded Obligations the amount of all future fees and expenses for its paying agent services with respect to the Refunded Obligations. Concurrently with the sale and delivery of the Bonds, the Town shall cause an amount sufficient to pay such future fees and expenses to be paid to each such paying agent.

Section 15.02. Deposit Agreement.

The Deposit Agreement with the paying agent/registrar for the Refunded Obligations, in substantially the form presented at this meeting, and its execution and delivery by the Mayor is hereby authorized and approved. The signature of the Mayor shall be attested by the City Secretary.

Section 15.03. Redemption of Refunded Obligations. Following the deposit with the paying agent/registrar for the Refunded Obligations as specified in the Deposit Agreement, the Refunded Obligations shall be payable solely from and secured by the cash deposit pursuant to the Deposit Agreement for the purpose of refunding the Refunded Obligations and shall cease to be payable from ad valorem taxes, and firm banking and financial arrangements shall have been made for the discharge and final payment or redemption of the Refunded Obligations pursuant to Chapter 1207. The Refunded Obligations are hereby called for redemption prior to maturity on the dates and at the redemption prices set forth in the Schedule I attached hereto. The City Secretary hereby authorized and directed to cause to be delivered to the paying agent/registrar for the Refunded Obligations a certified copy of this Ordinance calling the Refunded Obligations for redemption. The delivery of this Ordinance to the paying agent for the Refunded Obligations shall constitute the giving of notice of redemption to the paying agent for the Refunded Obligations and such paying agent is hereby authorized and directed to give notice of redemption to the owners of the Refunded Obligations in accordance with the requirements of the ordinance authorizing the issuance thereof.

ARTICLE XVI

EFFECTIVENESS

Section 16.01. Effectiveness.

This Ordinance shall take effect immediately from and after its passage.

APPROVED AND ADOPTED this January 11, 2022.

## SCHEDULE OF REFUNDED OBLIGATIONS

### Combination Tax & Revenue Certificates of Obligation Series 2012

| Original Dated Date | Original Maturity | Interest Rate | Principal Amount Outstanding | Principal Amount Refunded |
|---|---|---|---|---|
| 8/15/2012 | 2/15/2023 | 4.000% | $ 780,000 | $ 780,000 |
| | 2/15/2024 | 4.000% | 815,000 | 815,000 |
| | 2/15/2025 | 3.000% | 840,000 | 840,000 |
| | 2/15/2026 | 3.000% | 870,000 | 870,000 |
| | 2/15/2027 | 3.000% | 900,000 | 900,000 |
| | 2/15/2028 | 3.000% | 455,000 | 455,000 |
| | 2/15/2029 | 3.000% | 470,000 | 470,000 |
| | 2/15/2030 | 3.000% | 485,000 | 485,000 |
| | 2/15/2031 | 3.000% | 500,000 | 500,000 |
| | 2/15/2032 | 3.125% | 515,000 | 515,000 |
| | 2/15/2033(1) | 3.250% | 530,000 | 530,000 |
| | 2/15/2034(1) | 3.250% | 550,000 | 550,000 |
| | 2/15/2035(2) | 3.375% | 570,000 | 570,000 |
| | 2/15/2036(2) | 3.375% | 585,000 | 585,000 |
| | 2/15/2037(2) | 3.375% | 610,000 | 610,000 |
| | | | $ 9,475,000 | $ 9,475,000 |

(1) Represent mandatory sinking fund installments of a Term Bond with a final maturity of February 15, 2034.
(2) Represent mandatory sinking fund installments of a Term Bond with a final maturity of February 15, 2037.

**Council Meeting** **18.**

**Meeting Date:** 01/11/2022

**Department:** Infrastructure- Development Services

**Pillars:** Excellence in Transportation Systems

**Milestones:** Improve all modes of transportation with infrastructure in an acceptable condition and well maintained

---

**AGENDA CAPTION:**

Present, Discuss, and Consider Action on a **Resolution Approving a Contract Agreement Between the Town of Addison and Tiseo Paving Company, Inc. for the Bella Lane South Extension & Alpha Road Connector Project and Authorizing the City Manager to Execute the Contract** in an Amount Not to Exceed $2,999,910.66.

**BACKGROUND:**

The purpose of this item is to award a construction contract for the Bella Lane South Extension & Alpha Road Connector Project. The scope of work for the project includes street paving, bridge installation, water, storm drainage, landscape, and the construction of a detention pond.

On September 22, 2020, the City Council approved an Interlocal Agreement (ILA) with the City of Farmers Branch and the Dallas County Community College District (DCCCD) for the construction of the Alpha Road Connector Project to extend Bella Lane in Addison through Brookhaven College to Alpha Road in Farmers Branch. As outlined in the ILA, DCCCD has conveyed all necessary easements to construct the project.

On September 22, 2020, the City Council also authorized a Professional Services Agreement (PSA) with Kimley-Horn and Associates to perform the necessary design for this project. This design was completed in September 2021. The project was posted to CIVCAST on October 7, 2021, and closed on October 21, 2021. The Town received seven bids as outlined in the table below:

| | |
|---|---|
| DDM Construction | $2,928,224.99 |
| Tiseo Paving Company | $2,999,910.66 |
| Rebcon | $3,198,332.20 |
| Reliable Paving | $3,620,119.50 |
| Ragle | $3,655,617.37 |
| Mario Sinacola & Sons | $3,662,978.40 |

| | |
|---|---|
| McMahon Contracting | $3,919,151.08 |

Due to the current volatile nature of construction costs, Kimley-Horn's opinion of probable construction cost was between $3,255,000 and $3,839,000.

Based on bid submittal requirements, several irregularities were identified in DDM‘s bid package submittal. DDM did not demonstrate that they have worked on a project (current or previous) that included bridge construction. Additionally, DDM did not list all current projects. During reference checks, Kimley-Horn learned of a current project in the City of Irving as well as other recent past projects for other municipalities that were not identified. One of these is currently in liquidated damages. Based on this, DDM failed to demonstrate that it was qualified to do the work and did not submit all required information and documentation as outlined in the bid requirements.

Therefore, Tiseo Paving Company (Tiseo) has been determined to be the lowest responsive bidder and meets all of the qualifications for the project. Kimley-Horn & Associates Inc. has checked Tiseo‘s references and recommends awarding the contract to Tiseo. Tiseo is currently constructing the Midway Road Revitalization Project with the Town and has successfully performed similar projects with other municipalities.

Once the construction of the project is completed and accepted, the Town of Addison will only maintain the portion within the Town limits. Farmers Branch and DCCCD will be responsible for all other maintenance outside of the Town limits.

If approved, the construction work is anticipated to commence by the middle of February 2022 and is expected to take approximately 12 months to complete. The total project cost is estimated to be within the budgeted $3.68M. A total of $1,775,577 is allocated as part of Phase 4 of the Master Facilities Agreement (MFA) for the Vitruvian Development.

Below is a breakdown of the project funding sources as outlined in the ILA:

| | |
|---|---|
| Town of Addison Vitruvian Bonds | $1,600,000 |
| UDR | $1,600,000 |
| Farmers Branch | $480,000 |

Farmers Branch's contribution only applies to the costs above $3.2M.

The Bella Lane South Extension & Alpha Road Connector Project, as set forth in the ILA between the Town, Farmers Branch and DCCCD, commences at the northern edge of Phase 4 of the Vitruvian Development, approximately 800 feet

south of the existing end of Bella Lane. This remaining 800-foot section is in Phase 6 of the Vitruvian Development. Due to the limits of the ILA and location within the Vitruvian phasing, this remaining 800-foot segment of roadway, the Bella Lane North Connector Project, is anticipated to bid as a separate project in January 2022 and will be constructed concurrently with this project. Funding for Bella Lane North Connector Project is included as part of the $4,446,496 allocated for Phase 6 of the Vitruvian Development.

**RECOMMENDATION:**

Administration recommends approval.

---

**Attachments**

Resolution - Tiseo Paving, Inc. Bella Lane South Extension Construction Contract

Presentation - Bella Lane South

Recommendation Letter & Bid Tabulation

Bid Project Plans and Specifications

Tiseo Paving Bid Submittal

---

**RESOLUTION NO. _____**

**A RESOLUTION OF THE CITY COUNCIL OF THE TOWN OF ADDISON, TEXAS APPROVING A CONTRACT AGREEMENT WITH TISEO PAVING COMPANY, INC. FOR THE BELLA LANE SOUTH EXTENSION AND ALPHA ROAD CONNECTOR PROJECT (BID NUMBER 21-69); AUTHORIZING THE CITY MANAGER TO EXECUTE THE AGREEMENT; AND PROVIDING AN EFFECTIVE DATE.**

**WHEREAS,** the City Council desires to authorize a contract agreement with Tiseo Paving Company, Inc. for the construction of the Bella Lane south extension and the Alpha Road connector project (Bid No. 21-69).

**NOW, THEREFORE, BE IT RESOLVED BY THE CITY COUNCIL OF THE TOWN OF ADDISON, TEXAS:**

**SECTION 1**. The City Council hereby approves the contract agreement between the Town of Addison and Tiseo Paving Company Inc. for the construction of the Bella Lane south extension and the Alpha Road connector project in conformance with the contract documents (Bid No. 21-69), in an amount not-to-exceed of $2,999,910.66, a copy of which is attached to this Resolution as **Exhibit A**. The City Manager is hereby authorized to execute the agreement.

**SECTION 2.** This Resolution shall take effect from and after its date of adoption.

**DULY RESOLVED AND ADOPTED** by the City Council of the Town of Addison, Texas, on this the ***11th*** day of ***JANUARY 2022*****.**

**TOWN OF ADDISON, TEXAS**

_____
Joe Chow, Mayor

**ATTEST:**

_____
Irma Parker, City Secretary

EXHIBIT A

**SECTION CA**

# CONTRACT AGREEMENT

CA-1

# CONTRACT AGREEMENT

STATE OF TEXAS

COUNTY OF DALLAS

THIS AGREEMENT is made and entered into this _____ day of _____, 2021, by and between the Town of Addison, of the County of Dallas and State of Texas, acting through its City Manager, thereunto duly authorized so to do, Party of the First Part, hereinafter termed the OWNER, and Tiseo Paving Co., of the City of Mesquite, County of Dallas, State of Texas, Party of the Second Part, hereinafter termed CONTRACTOR.

WITNESSETH: That for and in consideration of the payment and agreement hereinafter mentioned, to be made and performed by the OWNER, the said CONTRACTOR hereby agrees with the said OWNER to commence and complete construction of certain improvements as follows:

**BELLA LANE SOUTH EXTENSION & ALPHA ROAD CONNECTOR**

**PUBLIC WORKS AND ENGINEERING SERVICES BID NUMBER 21-69**

and all extra work in connection therewith, under the terms as stated in the General and Specific Conditions of the AGREEMENT; and at his own proper cost and expense to furnish all the materials, supplies, machinery, equipment, tools, superintendence, labor, insurance and other accessories and services necessary to complete the said construction, in accordance with the conditions and prices stated in the Proposal attached hereto and in accordance with the Contract Documents.

The Contract Documents shall consist of the following documents:

1. this Contract Agreement;
2. properly authorized change orders;
3. any listed and numbered addenda;
4. the Special Provisions;
5. Technical Specifications & Construction Drawings;
6. the OWNER's Standard Construction Details;
7. the October 2017 5th Edition of the Public Works Construction Standards - North Central Texas as amended and published by the North Central Texas Council of Governments, as amended by the Owner (collectively, the "NCTCOG Specifications ");
8. the OWNER's written notice to proceed to the CONTRACTOR;
9. the Contractor's Bid Proposal;
10. the Performance, Payment, and Maintenance Bonds; and,
11. any other bid materials distributed by the Owner that relate to the Project.

These Contract Documents are incorporated by reference into this Construction Agreement as if set out here in their entirety. The Contract Documents are intended to be complementary; what is called for by one document shall be as binding as if called for by all Contract Documents. It is specifically provided, however, that in the event of any inconsistency in the Contract Documents, the inconsistency shall be resolved by giving precedence to the Contract Documents in the order in which they are listed herein above. If, however, there exists a conflict or inconsistency between the Technical Specifications and the Construction Drawings it shall be the Contractor's obligation to seek clarification as to which requirements or provisions control before undertaking any work on that component of the project. Should the Contractor fail or refuse to seek a clarification of such conflicting or inconsistent requirements or provisions prior to any work on that component of the project, the Contractor shall be solely responsible for the costs and expenses - including additional time - necessary to cure, repair and/or correct that component of the project.

The CONTRACTOR hereby agrees to commence work within ten (10) calendar days after the date of written notice to do so shall have been given to him, to complete the work within three hundred and thirty (330) calendar days, after he commences work, subject to such extensions of time as are provided by the General Provisions.

The OWNER agrees to pay the CONTRACTOR Two Million Nine Hundred Ninety Nine Thousand Nine Hundred Ten Dollars and 66 Cents Dollars ($ $2,999,910.66 ) in current funds for the performance of the Contract in accordance with the Proposal submitted thereof, subject to additions and deductions, as provided in the General Provisions, and to make payments of account thereof as provided therein.

IN WITNESS WHEREOF, the parties of these presents have executed this AGREEMENT in the year and day first above written.

**TOWN OF ADDISON, TEXAS (OWNER)**

By: _____
City Manager

**ATTEST:**

By: _____

TISEO PAVING CO.
(CONTRACTOR)

By: _____
Grant Brown, Vice President

ATTEST:

By: _____
Melanie Taylor, Admin Assist

The following to be executed if the CONTRACTOR is a corporation:

I, Louis Tiseo certify that I am the secretary of the corporation named as CONTRACTOR herein; that Grant Brown, who signed this Contract on behalf of the CONTRACTOR is the Vice President (official title) of said corporation; that said Contract was duly signed for and in behalf of said corporation by authority of its governing body, and is within the scope of its corporate powers.

Signed: _____
Louis Tiseo, Secretary Treasurer

Corporate Seal

| Item No. | Name of Pay Item with Unit Price in Words | Est. Quantity | Unit | Unit Bid Price | Amount Bid |
|---|---|---|---|---|---|
| **BASE BID - STREET IMPROVEMENTS** | | | | | |
| P1 | MOBILIZATION (5% MAX) | 1 | LS | | |
| | Complete in Place, for the Sum of ONE HUNDRED TWENTY FIVE THOUSAND Dollars and ZERO Cents per unit | | | $ 125,000.00 | $ 125,000.00 |
| P2 | BARRICADES, SIGNS, AND TRAFFIC HANDLING | 1 | LS | | |
| | Complete in Place, for the Sum of ONE HUNDRED FIFTY THREE THOUSAND, FOUR HUNDRED Dollars and ZERO Cents per unit | | | $ 153,400.00 | $ 153,400.00 |
| P3 | PROJECT SIGN | 2 | EA | | |
| | Complete in Place, for the Sum of FIVE HUNDRED FIFTY Dollars and ZERO Cents per unit | | | $ 550.00 | $ 1,100.00 |
| P4 | GENERAL SITE PREPARATION | 1 | LS | | |
| | Complete in Place, for the Sum of ONE HUNDRED EIGHTY SIX THOUSAND Dollars and ZERO Cents per unit | | | $ 186,000.00 | $ 186,000.00 |
| P5 | REMOVE EX HEADWALL | 1 | EA | | |
| | Complete in Place, for the Sum of ONE THOUSAND EIGHT HUNDRED NINETY Dollars and ZERO Cents per unit | | | $ 1,890.00 | $ 1,890.00 |
| P6 | REMOVAL OF EX RCP | 19 | LF | | |
| | Complete in Place, for the Sum of ELEVEN Dollars and FIFTY FIVE Cents per unit | | | $ 11.55 | $ 219.45 |
| P7 | REMOVE EXISTING CONCRETE SIDEWALK/RAMPS | 425 | SY | | |
| | Complete in Place, for the Sum of SEVEN Dollars and THIRTY FIVE Cents per unit | | | $ 7.35 | $ 3,123.75 |
| P8 | REMOVE EXISTING ASPHALT PAVEMENT | 480 | SY | | |
| | Complete in Place, for the Sum of NINE Dollars and NINETY EIGHT Cents per unit | | | $ 9.98 | $ 4,790.40 |
| P9 | REMOVE EXISTING TREES | 116 | EA | | |
| | Complete in Place, for the Sum of THREE HUNDRED FIFTEEN Dollars and ZERO Cents per unit | | | $ 315.00 | $ 36,540.00 |
| P10 | UNCLASSIFIED STREET EXCAVATION | 1 | LS | | |
| | Complete in Place, for the Sum of THREE THOUSAND SIX HUNDRED SEVENTY FIVE Dollars and ZERO Cents per unit | | | $ 3,675.00 | $ 3,675.00 |
| P11 | BORROW AND SPOIL (ROADWAY) | 1 | LS | | |
| | Complete in Place, for the Sum of ONE HUNDRED TWENTY FOUR THOUSAND SEVEN HUNDRED FORTY Dollars and ZERO Cents per unit | | | $ 124,740.00 | $ 124,740.00 |
| P12 | MOISTURE TREATED SUBGRADE | 7,180 | SY | | |
| | Complete in Place, for the Sum of THREE Dollars and ZERO Cents per unit | | | $ 3.00 | $ 21,540.00 |

| Item No. | Name of Pay Item with Unit Price in Words | Est. Quantity | Unit | Unit Bid Price | Amount Bid |
|---|---|---|---|---|---|
| P13 | 6" LIME STABILIZED SUBGRADE | 1,145 | SY | | |
| | Complete in Place, for the Sum of NINE Dollars and ZERO Cents per unit | | | $ 9.00 | $ 10,305.00 |
| P14 | HYDRATED LIME | 25 | TON | | |
| | Complete in Place, for the Sum of TWO HUNDRED THREE Dollars and ZERO Cents per unit | | | $ 203.00 | $ 5,075.00 |
| P15 | 4" TYP B HMAC (TXDOT) | 30 | TON | | |
| | Complete in Place, for the Sum of TWO HUNDRED Dollars and ZERO Cents per unit | | | $ 200.00 | $ 6,000.00 |
| P16 | 8" REINFORCED CONCRETE PAVEMENT (STREET) | 6,299 | SY | | |
| | Complete in Place, for the Sum of SIXTY TWO Dollars and TWENTY FIVE Cents per unit | | | $ 62.25 | $ 392,112.75 |
| P17 | 10" PORTLAND CEMENT CONC PAVEMENT W/ 6" MONO CURB ) | 1,050 | SY | | |
| | Complete in Place, for the Sum of EIGHTY TWO Dollars and FIVE Cents per unit | | | $ 82.05 | $ 86,152.50 |
| P18 | REINFORCED CONCRETE STREET HEADERS | 540 | LF | | |
| | Complete in Place, for the Sum of THIRTY Dollars and ZERO Cents per unit | | | $ 30.00 | $ 16,200.00 |
| P19 | 5" CONCRETE SIDEWALK | 3,100 | SY | | |
| | Complete in Place, for the Sum of FIFTY ONE Dollars and NINETY EIGHT Cents per unit | | | $ 51.98 | $ 161,138.00 |
| P20 | ACESSIBLE RAMP | 12 | EA | | |
| | Complete in Place, for the Sum of TWO THOUSAND ONE HUNDRED EIGHTY FOUR Dollars and ZERO Cents per unit | | | $ 2,184.00 | $ 26,208.00 |
| P21 | RAIL (HANDRAIL) (TY F) | 35 | LF | | |
| | Complete in Place, for the Sum of TWO HUNDRED TEN Dollars and ZERO Cents per unit | | | $ 210.00 | $ 7,350.00 |
| P22 | INSTALL NEW SIGN AND SIGN POST ASSEMBLY | 20 | EA | | |
| | Complete in Place, for the Sum of SEVEN HUNDRED EIGHT TWO Dollars and TWENTY FIVE Cents per unit | | | $ 782.25 | $ 15,645.00 |
| P23 | REFL PAV MRKG TY I & TY II (W) 4" SOLID | 3,300 | LF | | |
| | Complete in Place, for the Sum of ONE Dollars and TWENTY ONE Cents per unit | | | $ 1.21 | $ 3,993.00 |
| P24 | REFL PAV MRKG TY I & TY II (Y) 4" SOLID | 3,050 | LF | | |
| | Complete in Place, for the Sum of ONE Dollars and TWENTY ONE Cents per unit | | | $ 1.21 | $ 3,690.50 |

| Item No. | Name of Pay Item with Unit Price in Words | Est. Quantity | Unit | Unit Bid Price | Amount Bid |
|---|---|---|---|---|---|
| P25 | REFL PAV MRKG TY I & TY II (Y) 4" BROKEN | 140 | LF | | |
| | Complete in Place, for the Sum of FOUR Dollars and TWENTY Cents per unit | | | $ 4.20 | $ 588.00 |
| P26 | REFL PAV MRKG TY I & TY II (W) ARROW | 3 | EA | | |
| | Complete in Place, for the Sum of ONE HUNDRED FIFTY TWO Dollars and TWENTY FIVE Cents per unit | | | $ 152.25 | $ 456.75 |
| P27 | REFL PAV MRKG TY I & TY II (W) 24" STOP BAR MARKING | 31 | LF | | |
| | Complete in Place, for the Sum of EIGHT Dollars and FIFTY SIX Cents per unit | | | $ 8.56 | $ 265.36 |
| P28 | REFL PAV MRKG TY I & TY II (W) 5' X 8' CROSSWALK WITH 5' SPACE | 3 | EA | | |
| | Complete in Place, for the Sum of TWO HUNDRED NINETY NINE Dollars and TWENTY FIVE Cents per unit | | | $ 299.25 | $ 897.75 |
| P29 | REFL PAV MRKG TY I & TY II (W) 24"X 8" CROSSWALK WITH 4' SPACE | 15 | EA | | |
| | Complete in Place, for the Sum of NINETY NINE Dollars and SEVENTY FIVE Cents per unit | | | $ 99.75 | $ 1,496.25 |
| P30 | REFL PAV MRKG TY I (W) 24" TRIANGLE | 21 | EA | | |
| | Complete in Place, for the Sum of FIFTY Dollars and FORTY Cents per unit | | | $ 50.40 | $ 1,058.40 |
| P31 | REMOVE AND RELOCATE EX GATE | 1 | EA | | |
| | Complete in Place, for the Sum of TWO THOUSAND SEVEN HUNDRED THIRTY Dollars and ZERO Cents per unit | | | $ 2,730.00 | $ 2,730.00 |
| P32 | ONCOR DUCT CROSSING COORDINATION | 1 | LS | | |
| | Complete in Place, for the Sum of THREE THOUSAND Dollars and ZERO Cents per unit | | | $ 3,000.00 | $ 3,000.00 |

**TOTAL AMOUNT BID-BASE BID - STREET IMPROVEMENTS**

$1,406,380.86
(Total Amount Bid, Numerical Value)

ONE MILLION FOUR HUNDRED SIX THOUSAND, THREE HUNDRED EIGHTY Dollars
and
EIGHTY SIX Cents

***The Owner reserves the right to delete any bid items or portions thereof. If the Owner elects to delete any portions of the PROJECT from the contract, then the contract can be awarded on that basis.**

| Item No. | Name of Pay Item with Unit Price in Words | Est. Quantity | Unit | Unit Bid Price | Amount Bid |
|---|---|---|---|---|---|
| **BRIDGE OVER FARMERS BRANCH CREEK** | | | | | |
| B1 | FLOWABLE BACKFILL | 443 | CY | | |
| | Complete in Place, for the Sum of<br>ONE HUNDRED SIXTY EIGHT<br>Dollars and<br>ZERO Cents per unit | | | $ 168.00 | $ 74,424.00 |
| B2 | DRILL SHAFT (18 IN) | 148 | LF | | |
| | Complete in Place, for the Sum of<br>ONE HUNDRED TWENTY SIX<br>Dollars and<br>ZERO Cents per unit | | | $ 126.00 | $ 18,648.00 |
| B3 | DRILL SHAFT (36 IN) | 296 | LF | | |
| | Complete in Place, for the Sum of<br>TWO HUNDRED TEN<br>Dollars and<br>ZERO Cents per unit | | | $ 210.00 | $ 62,160.00 |
| B4 | CL C CONC (ABUT) (HPC) | 100 | CY | | |
| | Complete in Place, for the Sum of<br>ONE THOUSAND FIFTY<br>Dollars and<br>ZERO Cents per unit | | | $ 1,050.00 | $ 105,000.00 |
| B5 | REINF CONC SLAB (HPC) | 2,648 | SF | | |
| | Complete in Place, for the Sum of<br>TWENTY NINE<br>Dollars and<br>FORTY Cents per unit | | | $ 29.40 | $ 77,851.20 |
| B6 | BRIDGE SIDEWALK (HPC) | 980 | SF | | |
| | Complete in Place, for the Sum of<br>SIXTEEN<br>Dollars and<br>EIGHTY Cents per unit | | | $ 16.80 | $ 16,464.00 |
| B7 | APPROACH SLAB (HPC) | 83 | CY | | |
| | Complete in Place, for the Sum of<br>SEVEN HUNDRED THIRTY FIVE<br>Dollars and<br>ZERO Cents per unit | | | $ 735.00 | $ 61,005.00 |
| B8 | PRESTR CONC I-GIRDER (TX40) | 329 | LF | | |
| | Complete in Place, for the Sum of<br>TWO HUNDRED SEVENTY THREE<br>Dollars and<br>ZERO Cents per unit | | | $ 273.00 | $ 89,817.00 |
| B9 | RIPRAP (CONC) (CL B) (RR8&RR9) | 76 | CY | | |
| | Complete in Place, for the Sum of<br>SIX HUNDRED THIRTY<br>Dollars and<br>ZERO Cents per unit | | | $ 630.00 | $ 47,880.00 |
| B10 | RIPRAP (STONE PROTECTION) (24 IN) | 1,470 | CY | | |
| | Complete in Place, for the Sum of<br>ONE HUNDRED TWENTY FIVE<br>Dollars and<br>ZERO Cents per unit | | | $ 125.00 | $ 183,750.00 |
| B11 | ELASTOMERIC BEARING (LAMINATED) | 8 | EA | | |
| | Complete in Place, for the Sum of<br>FOUR HUNDRED SEVENTY TWO<br>Dollars and<br>FIFTY Cents per unit | | | $ 472.50 | $ 3,780.00 |
| B12 | STR STEEL (MISCELLANEOUS BRIDGE) (BS-EJCP) | 186 | LB | | |
| | Complete in Place, for the Sum of<br>EIGHTEEN<br>Dollars and<br>NINETY Cents per unit | | | $ 18.90 | $ 3,515.40 |

| Item No. | Name of Pay Item with Unit Price in Words | Est. Quantity | Unit | Unit Bid Price | Amount Bid |
|---|---|---|---|---|---|
| B13 | RAIL (TY C221) (HPC) | 238 | LF | | |
| | Complete in Place, for the Sum of ONE HUNDRED NINETY NINE Dollars and FIFTY Cents per unit | | | $ 199.50 | $ 47,481.00 |
| B14 | SEALED EXPANSION JOINT (4 IN) (SEJ - M) | 51 | LF | | |
| | Complete in Place, for the Sum of ONE HUNDRED SEVENTY EIGHT Dollars and FIFTY Cents per unit | | | $ 178.50 | $ 9,103.50 |
| B15 | MTL BEAM GD FEN TRANS (THRIE-BEAM) | 3 | EA | | |
| | Complete in Place, for the Sum of TWO THOUSAND THREE HUNDRED TEN Dollars and ZERO Cents per unit | | | $ 2,310.00 | $ 6,930.00 |
| B16 | TERMINAL ANCHOR SECTION | 3 | EA | | |
| | Complete in Place, for the Sum of THREE THOUSAND FOUR HUNDRED SIXTY FIVE Dollars and ZERO Cents per unit | | | $ 3,465.00 | $ 10,395.00 |

**TOTAL AMOUNT BID-BRIDGE OVER FARMERS BRANCH CREEK**

$818,204.10
(Total Amount Bid, Numerical Value)

EIGHT HUNDRED EIGHTEEN THOUSAND TWO HUNDRED FOUR Dollars
and TEN Cents

***The Owner reserves the right to delete any bid items or portions thereof. If the Owner elects to delete any portions of the PROJECT from the contract, then the contract can be awarded on that basis.**

| Item No. | Name of Pay Item with Unit Price in Words | Est. Quantity | Unit | Unit Bid Price | Amount Bid |
|---|---|---|---|---|---|
| **BASE BID - STORM SYSTEM IMPROVEMENTS** | | | | | |
| D1 | 18" RCP CLASS III | 490 | LF | | |
| | Complete in Place, for the Sum of SEVENTY SEVEN Dollars and SEVENTY Cents per unit | | | $ 77.70 | $ 38,073.00 |
| D2 | 24" RCP CLASS III | 285 | LF | | |
| | Complete in Place, for the Sum of NINETY EIGHT Dollars and SEVENTY Cents per unit | | | $ 98.70 | $ 28,129.50 |
| D3 | 54" RCP CLASS III | 95 | LF | | |
| | Complete in Place, for the Sum of THREE HUNDRED TWENTY SIX Dollars and FIFTY FIVE Cents per unit | | | $ 326.55 | $ 31,022.25 |
| D4 | 6' CURB INLET | 4 | EA | | |
| | Complete in Place, for the Sum of FIVE THOUSND ONE HUNDRED FORTY FIVE Dollars and ZERO Cents per unit | | | $ 5,145.00 | $ 20,580.00 |
| D5 | CONCRETE HEADWALL (CHFW-0) | 3 | EA | | |
| | Complete in Place, for the Sum of SIX THOUSAND NINE HUNDRED THIRTY Dollars and ZERO Cents per unit | | | $ 6,930.00 | $ 20,790.00 |
| D6 | 18" RCP 2:1 SET TY II HEADWALL | 1 | EA | | |
| | Complete in Place, for the Sum of TWO THOUSAND FIVE HUNDRED TWENTY Dollars and ZERO Cents per unit | | | $ 2,520.00 | $ 2,520.00 |
| D7 | 18" RCP 6:1 SET TY II HEADWALL | 4 | EA | | |
| | Complete in Place, for the Sum of THREE THOUSAND FORTY FIVE Dollars and ZERO Cents per unit | | | $ 3,045.00 | $ 12,180.00 |
| D8 | 24" RCP 6:1 SET TY II HEADWALL | 4 | EA | | |
| | Complete in Place, for the Sum of FOUR THOUSAND TWO HUNDRED Dollars and ZERO Cents per unit | | | $ 4,200.00 | $ 16,800.00 |
| D9 | RIPRAP (STONE PROTECTION) (12 IN) (CHFW-0 HEADWALL) | 12 | CY | | |
| | Complete in Place, for the Sum of ONE HUNDRED THIRTY ONE Dollars and TWENTY FIVE Cents per unit | | | $ 131.25 | $ 1,575.00 |
| D10 | TRENCH EXCAVATION PROTECTION (STORM SYSTEM) | 870 | LF | | |
| | Complete in Place, for the Sum of ONE Dollars and FIVE Cents per unit | | | $ 1.05 | $ 913.50 |

**TOTAL AMOUNT BID-BASE BID - STORM SYSTEM IMPROVEMENTS**

$ 172,583.25
(Total Amount Bid, Numerical Value)

and ONE HUNDRED SEVENTY TWO THOUSAND FIVE HUNDRED EIGHTY THREE Dollars
TWENTY FIVE Cents

***The Owner reserves the right to delete any bid items or portions thereof. If the Owner elects to delete any portions of the PROJECT from the contract, then the contract can be awarded on that basis.**

| Item No. | Name of Pay Item with Unit Price in Words | Est. Quantity | Unit | Unit Bid Price | Amount Bid |
|---|---|---|---|---|---|
| **BASE BID - DETENTION POND IMPROVEMENTS** | | | | | |
| H1 | UNCLASSIFIED POND AND CREEK EXCAVATION | 1 | LS | | |
| | Complete in Place, for the Sum of<br>SIXTY THOUSAND THREE HUNDRED SEVENTY FIVE<br>Dollars and<br>ZERO Cents per unit | | | $ 60,375.00 | $ 60,375.00 |
| H2 | BORROW AND SPOIL (DETENTION POND AND CREEK) | 1 | LS | | |
| | Complete in Place, for the Sum of<br>SIX THOUSAND THREE HUNDRED<br>Dollars and<br>ZERO Cents per unit | | | $ 6,300.00 | $ 6,300.00 |
| H3 | BORROW AND SPOIL (DETENTION POND AND CREEK) (SELECT FILL) | 1 | LS | | |
| | Complete in Place, for the Sum of<br>TWENTY EIGHT THOUSAND TWO HUNDRED TWENTY FOUR<br>Dollars and<br>ZERO Cents per unit | | | $ 28,224.00 | $ 28,224.00 |
| H4 | RIPRAP (CONC) (CL B) (RR8&RR9) (DETENTION POND) | 6 | CY | | |
| | Complete in Place, for the Sum of<br>SEVEN HUNDRED SIXTEEN<br>Dollars and<br>TEN Cents per unit | | | $ 716.10 | $ 4,296.60 |
| H5 | RIPRAP (STONE PROTECTION) (24 IN) (DETENTION POND) | 910 | CY | | |
| | Complete in Place, for the Sum of<br>ONE HUNDRED TEN<br>Dollars and<br>TWENTY FIVE Cents per unit | | | $ 110.25 | $ 100,327.50 |
| H6 | CONCRETE OUTFALL STUCTURE | 7 | CY | | |
| | Complete in Place, for the Sum of<br>TWO THOUSAND FOUR HUNDRED FIFTEEN<br>Dollars and<br>ZERO Cents per unit | | | $ 2,415.00 | $ 16,905.00 |

**TOTAL AMOUNT BID-BASE BID - DETENTION POND IMPROVEMENTS**

$ 216,428.10
(Total Amount Bid, Numerical Value)

TWO HUNDRED SIXTEEN THOUSAND FOUR HUNDRED TWENTY EIGHT Dollars
and TEN Cents

***The Owner reserves the right to delete any bid items or portions thereof. If the Owner elects to delete any portions of the PROJECT from the contract, then the contract can be awarded on that basis.**

| Item No. | Name of Pay Item with Unit Price in Words | Est. Quantity | Unit | Unit Bid Price | Amount Bid |
|---|---|---|---|---|---|
| **BASE BID - LANDSCAPE IMPROVEMENTS AND EROSION CONTROL** | | | | | |
| L1 | HYDRAULIC MULCHING WITH 4" TOPSOIL | 45,490 | SY | | |
| | Complete in Place, for the Sum of TWO _____ Dollars and EIGHTY NINE Cents per unit | | | $ 2.89 | $ 131,466.10 |
| L2 | SEDIMENT CONTROL FENCE (INSTALL/MAINTAIN/REMOVE) | 7,475 | LF | | |
| | Complete in Place, for the Sum of ONE _____ Dollars and SIXTY EIGHT Cents per unit | | | $ 1.68 | $ 12,558.00 |
| L3 | STABILIZED CONSTRUCTION EXIT/ENTRANCE | 180 | SY | | |
| | Complete in Place, for the Sum of THIRTY ONE _____ Dollars and FIFTY Cents per unit | | | $ 31.50 | $ 5,670.00 |
| L4 | INLET PROTECTION (INSTALL/MAINTAIN/REMOVE) | 4 | EA | | |
| | Complete in Place, for the Sum of ONE HUNDRED FORTY ONE _____ Dollars and SEVENTY FIVE Cents per unit | | | $ 141.75 | $ 567.00 |
| L5 | ROCK CHECK DAM | 65 | LF | | |
| | Complete in Place, for the Sum of FORTY TWO _____ Dollars and ZERO Cents per unit | | | $ 42.00 | $ 2,730.00 |
| L6 | STORM WATER POLLUTION PREVENTION PLAN | 1 | LS | | |
| | Complete in Place, for the Sum of EIGHT THOUSND FIVE HUNDRED _____ Dollars and ZERO Cents per unit | | | $ 8,500.00 | $ 8,500.00 |

**TOTAL AMOUNT BID-TOTAL AMOUNT BID-BASE BID - DETENTION POND IMPROVEMENTS**

$ 161,491.10

(Total Amount Bid, Numerical Value)

ONE HUNDRED SIXTY ONE THOUSAND FOUR HUNDRED NINETY ONE Dollars

and TEN Cents

***The Owner reserves the right to delete any bid items or portions thereof. If the Owner elects to delete any portions of the PROJECT from the contract, then the contract can be awarded on that basis.**

| Item No. | Name of Pay Item with Unit Price in Words | Est. Quantity | Unit | Unit Bid Price | Amount Bid |
|---|---|---|---|---|---|
| **BASE BID - WATER IMPROVEMENTS** | | | | | |
| W1 | 8" PVC WATER LINE | 355 | LF | | |
| | Complete in Place, for the Sum of EIGHTY ONE Dollars and | | | | |
| | NINETY Cents per unit | | | $ 81.90 | $ 29,074.50 |
| W2 | 12" PVC WATER LINE | 575 | LF | | |
| | Complete in Place, for the Sum of NINETY EIGHT Dollars and | | | | |
| | SEVENTY Cents per unit | | | $ 98.70 | $ 56,752.50 |
| W3 | 8 " GATE VALVE | 2 | EA | | |
| | Complete in Place, for the Sum of ONE THOUSAND EIGHT HUNDRED NINETY Dollars and | | | | |
| | ZERO Cents per unit | | | $ 1,890.00 | $ 3,780.00 |
| W4 | 12" GATE VALVE | 2 | EA | | |
| | Complete in Place, for the Sum of THREE THOUSAND TWO HUNDRED FIFTY FIVE Dollars and | | | | |
| | ZERO Cents per unit | | | $ 3,255.00 | $ 6,510.00 |
| W5 | FIRE HYDRANT ASSEMBLY | 1 | EA | | |
| | Complete in Place, for the Sum of FOUR THOUSAND NINE HUNDRED THIRTY FIVE Dollars and | | | | |
| | ZERO Cents per unit | | | $ 4,935.00 | $ 4,935.00 |
| W6 | REMOVE EXISTING 12" AC WATER LINE | 8 | LF | | |
| | Complete in Place, for the Sum of FORTY TWO Dollars and | | | | |
| | ZERO Cents per unit | | | $ 42.00 | $ 336.00 |
| W7 | ABANDON EXISTING ASBESTOS PIPE IN PLACE | 500 | LF | | |
| | Complete in Place, for the Sum of TWENTY ONE Dollars and | | | | |
| | ZERO Cents per unit | | | $ 21.00 | $ 10,500.00 |
| W8 | WATER TESTING | 1 | LS | | |
| | Complete in Place, for the Sum of ONE THOUSAND THREE HUNDRED TWELEVE Dollars and | | | | |
| | FIFTY Cents per unit | | | $ 1,312.50 | $ 1,312.50 |
| W9 | TRENCH EXCAVATION PROTECTION (WATER SYSTEM) | 930 | LF | | |
| | Complete in Place, for the Sum of ONE Dollars and | | | | |
| | FIVE Cents per unit | | | $ 1.05 | $ 976.50 |

**TOTAL AMOUNT BID-BASE BID - WATER IMPROVEMENTS** $ 114,177.00
(Total Amount Bid, Numerical Value)

ONE HUNDRED FOURTEEN THOUSAND ONE HUNDRED SEVENTY SEVEN Dollars
and ZERO Cents

***The Owner reserves the right to delete any bid items or portions thereof. If the Owner elects to delete any portions of the PROJECT from the contract, then the contract can be awarded on that basis.**

| Item No. | Name of Pay Item with Unit Price in Words | Est. Quantity | Unit | Unit Bid Price | Amount Bid |
|---|---|---|---|---|---|
| **BASE BID - SANITARY SEWER IMPROVEMENTS** | | | | | |
| SS1 | 8" PVC SSWR LINE | 315 | LF | | |
| | Complete in Place, for the Sum of FIFTY FOUR Dollars and SIXTY Cents per unit | | | $ 54.60 | $ 17,199.00 |
| SS2 | 4' STANDARD MANHOLE | 1 | EA | | |
| | Complete in Place, for the Sum of SIX THOUSAND FIVE HUNDRED TEN Dollars and ZERO Cents per unit | | | $ 6,510.00 | $ 6,510.00 |
| SS3 | CEMENT STABILIZED SAND ENCASEMENT (MIN. 10% CEMENT/CY) | 20 | LF | | |
| | Complete in Place, for the Sum of FORTY SEVEN Dollars and TWENTY FIVE Cents per unit | | | $ 47.25 | $ 945.00 |
| SS4 | SANITARY SEWER CCTV INSPECTION | 1 | LS | | |
| | Complete in Place, for the Sum of SIX HUNDRED SIXTY ONE Dollars and FIFTY Cents per unit | | | $ 661.50 | $ 661.50 |
| SS5 | TRENCH EXCAVATION PROTECTION (SANITARY SEWER IMPROVEMENTS) | 315 | LF | | |
| | Complete in Place, for the Sum of ONE Dollars and FIVE Cents per unit | | | $ 1.05 | $ 330.75 |

**TOTAL AMOUNT BID-BASE BID - SANITARY SEWER IMPROVEMENTS**

$ 25,646.25
(Total Amount Bid, Numerical Value)

TWENTY FIVE THOUSAND SIX HUNDRED FORTY SIX Dollars
and TWENTY FIVE Cents

***The Owner reserves the right to delete any bid items or portions thereof. If the Owner elects to delete any portions of the PROJECT from the contract, then the contract can be awarded on that basis.**

| Item No. | Name of Pay Item with Unit Price in Words | Est. Quantity | Unit | Unit Bid Price | Amount Bid |
|---|---|---|---|---|---|
| **BASE BID - OWNER'S CONTINGENCY** | | | | | |
| 01 | OWNER'S CONTINGENCY | 1 | LS | | |
| | Complete in Place, for the Sum of | | | | |
| | Eighty Five Thousand Dollars and<br>Zero Cents per unit | | | $ 85,000.00 | $ 85,000.00 |

**TOTAL AMOUNT BID-BASE BID - OWNER'S CONTINGENCY**

$ 85,000.00
(Total Amount Bid, Numerical Value)

and EIGHTY FIVE THOUSAND Dollars
ZERO Cents

***The Owner reserves the right to delete any bid items or portions thereof. If the Owner elects to delete any portions of the PROJECT from the contract, then the contract can be awarded on that basis.**

# CERTIFICATE OF INTERESTED PARTIES

FORM 1295

1 of 1

Complete Nos. 1 - 4 and 6 if there are interested parties.
Complete Nos. 1, 2, 3, 5, and 6 if there are no interested parties.

**OFFICE USE ONLY**
**CERTIFICATION OF FILING**

**Certificate Number:**
2021-826804

**Date Filed:**
11/24/2021

**Date Acknowledged:**

**1 Name of business entity filing form, and the city, state and country of the business entity's place of business.**
Tiseo Paving Co.
Dallas, TX United States

**2 Name of governmental entity or state agency that is a party to the contract for which the form is being filed.**
Town of Addison

**3 Provide the identification number used by the governmental entity or state agency to track or identify the contract, and provide a description of the services, goods, or other property to be provided under the contract.**
Bid No. 21-69
Bella Lane South Extension & Alpha Road Connector

| 4 Name of Interested Party | City, State, Country (place of business) | Nature of interest (check applicable) | |
|---|---|---|---|
| | | Controlling | Intermediary |
| | | | |
| | | | |
| | | | |
| | | | |
| | | | |
| | | | |
| | | | |
| | | | |
| | | | |

**5 Check only if there is NO Interested Party.** [X]

**6 UNSWORN DECLARATION**

My name is Louis Tiseo, and my date of birth is 11/4/1958.

My address is 419 US Highway 80 East (street), Mesquite, (city) TX (state) 75150 (zip code) USA (country).

I declare under penalty of perjury that the foregoing is true and correct.

Executed in Dallas County, State of Texas, on the 24 day of Nov. (month), 20 21 (year).

Signature of authorized agent of contracting business entity
(Declarant)

Forms provided by Texas Ethics Commission www.ethics.state.tx.us Version V1.1.191b5cdc

# Bella Lane South Extension & Alpha Road Connector Construction Services

City Council

January 11, 2022

# Project History

2013 – Negotiations on an Interlocal Agreement (ILA) for the roadway initially began between the Town of Addison and City of Farmers Branch and occurred off and on over the next few years.

May 2019 – Addison Council appoints an Ad Hoc City Council Sub-Committee to meet with the Farmers Branch City Council members to reopen dialogue between Addison and Farmers Branch to consider, among other things, potential infrastructure projects that would benefit community stakeholders in both communities, like the possible extension of Bella Lane. The Town's appointed members were Mayor Joe Chow, Council Member Tom Braun, Mayor Pro Tempore Lori Ward, and City Manager Wes Pierson.

# Project History Continued

As a part of the discussions between the Town, Farmers Branch, and Dallas County Community College District (DCCCD), conditions were set to facilitate the extension of Bella Lane. One of these conditions was that the Town would construct a detention pond to "satisfy any past, present, and future obligations for Addison's and Vitruvian Park development's drainage impact on the Farmers Branch drainage area relating to the development of Vitruvian Park." Additionally, all Right-of-Way easements required for the construction of the roadway and detention pond will be granted by Brookhaven College at no cost.

September 2020 – ILA approved by the DCCCD board of trustees, Farmers Branch, and Town of Addison. Addison Council also approves the Bella Lane extension design contract with Kimley-Horn.

October 2020 – Town of Addison enters joint funding agreement with UDR.

# Project Funding Sources

| Contributing Party | Amount |
|---|---|
| Town of Addison | $1,600,000 |
| UDR | $1,600,000 |
| City of Farmers Branch* | $480,000 |
| **Total** | **$3,680,000** |

*Farmers Branch contributes $480,000 only after $3.2M from Addison and UDR is expended.

# Project Scope / Summary

Installation of the new roadway includes:

- Street Paving of a new roadway between Bella Lane and Alpha Road
- Bridge installation
- Utility installation
- Landscaping
- Detention Pond

Once the construction of the project is completed and accepted, the Town of Addison will only maintain the portion withing the Town's limits. Farmers Branch and DCCCD will be responsible for maintenance outside of Addison's limits.



# Vitruvian Phases

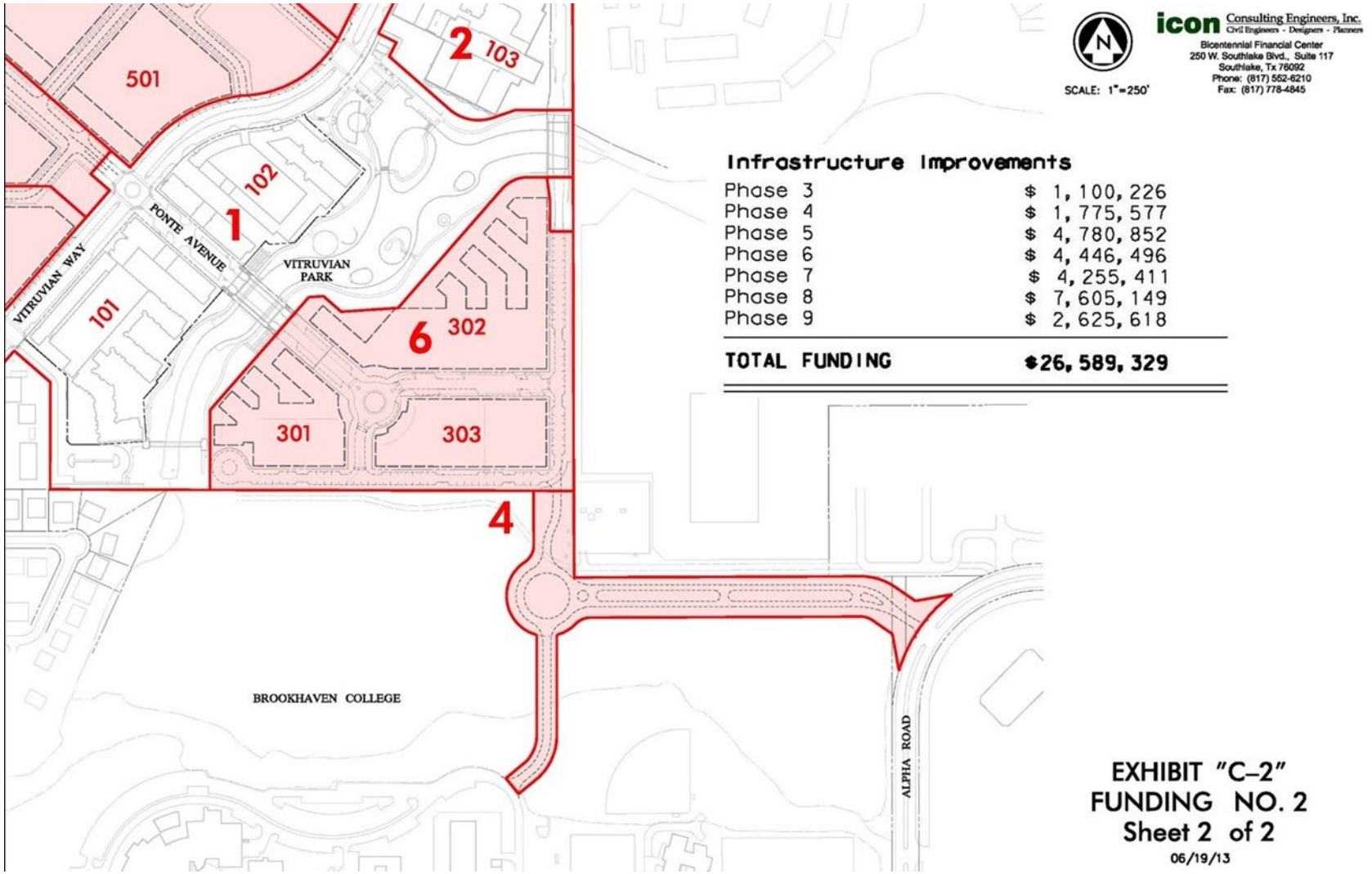

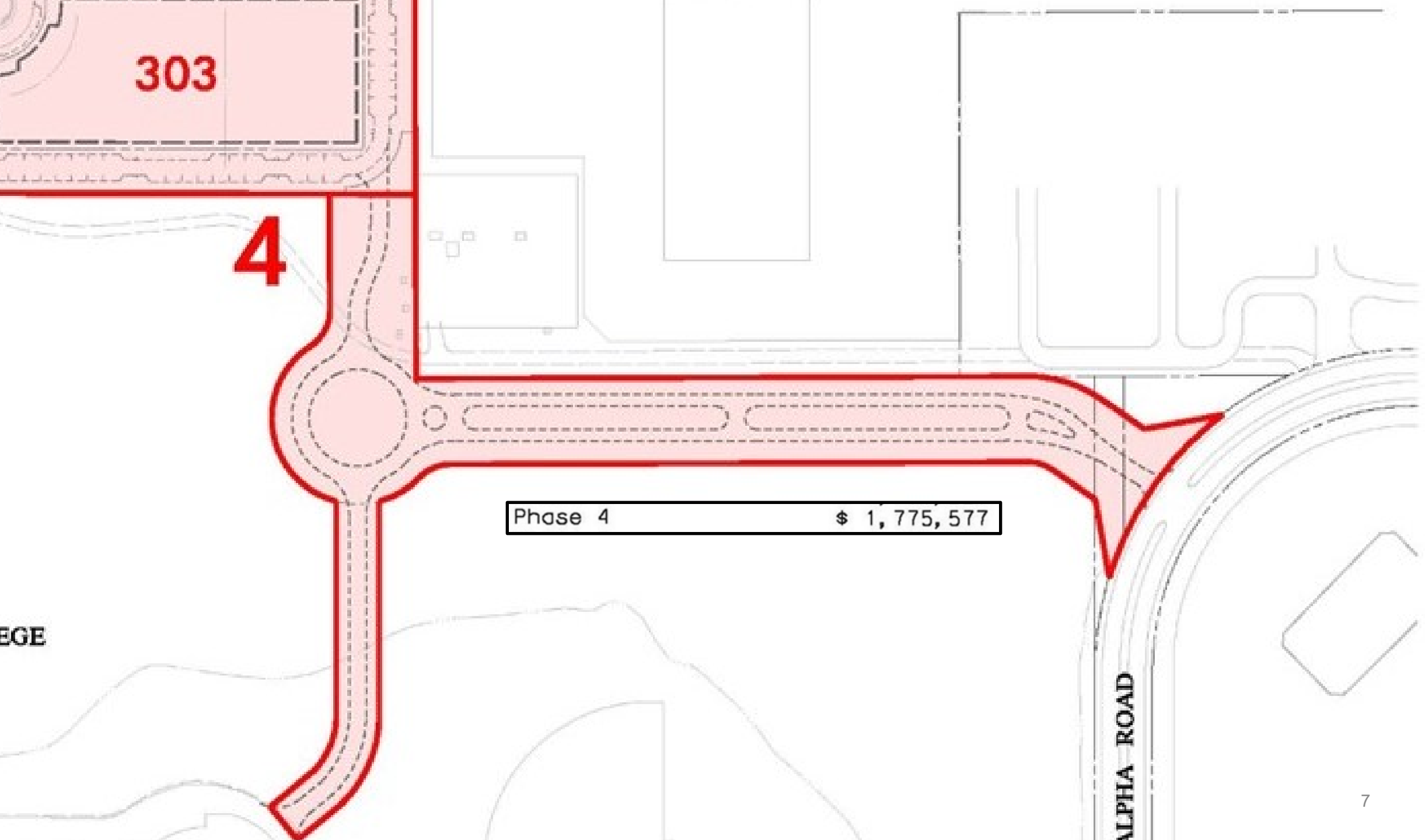
303
4
Phase 4 $ 1,775,577
EGE
ALPHA ROAD




| | |
|---|---|
| Phase 6 | $ 4,446,496 |

# Project Budget

| Description | Amount |
|---|---|
| Design | $499,600 |
| Materials Testing | $32,000 |
| **Project Funding** | **$3,680,000** |
| **Available for Construction** | **$3,148,400** |

# Bids

October 2021 – Project posted to CIVCAST for bids; Town received the following seven bids:

| Company | Bid Total |
|---|---|
| DDM Construction* | $2,928,224.99 |
| Tiseo Paving Company | $2,999,910.66 |
| Rebcon | $3,198,332.20 |
| Reliable Paving | $3,620,119.50 |
| Ragle | $3,655,617.37 |
| Mario Sinacola & Sons | $3,662,978.40 |
| McMahon Contracting | $3,919,151.08 |

*DDM Construction disqualified due to irregularities in bid.

# Questions / Discussion

Kimley»Horn

November 08, 2021

Shannon Hicks, P.E.
Director of Public Works and Engineering Services

Town of Addison
Addison Service Center
16801 Westgrove Drive
Addison, TX 75001

**RE:** ***Bella Lane South Extension and Alpha Road Connector Bid Results***
***Project No.: 2021-01C***
***Bid No.: 21-69***

Mr. Hicks,

On October 21, 2021, the Town of Addison received bids for the Bella Lane South Extension and Alpha Road Connector project. The two lowest bids received are listed below.

| Bidder | Total Bid |
|---|---|
| DDM Construction Corporation (DDM) | $2,928,224.66 |
| Tiseo Paving Company (Tiseo) | $2,999,910.66 |

Kimley-Horn and Associates, Inc. (Kimley-Horn) has reviewed both bids and contacted references for both bidders.

The following irregularities were observed in DDM's bid.

- On page BQS-2 in Section BQS of the bid documents it states, "The Contractor shall show that he has experience with similar projects that require working on concrete pavement, water, storm sewer, detention pond, and bridge construction in close proximity to many physical features (such as: fences, carports, utility poles, guy lines, gas lines and meters, water lines, sewer manholes and cleanouts, etc.) which will require the Contractor to plan his work efforts and equipment needs with these limitations in mind." At the time of bid, DDM did not demonstrate that they have worked on a project (current or complete) that included bridge construction.
- On page BQS-2 in Section BQS of the bid documents it states, "The Contractor shall submit a complete list of ALL Municipal and Similar Non-Municipal current and completed projects for the past three (3) years for review." DDM did not list all current projects. Kimley-Horn learned of a current project in the City of Irving that was not identified as well as other recent past projects for other municipalities.
- On page BQS-5 in Section BQS of the bid documents it requires "Type(s) of Work to be done by Sub-contractors" to be included with the bidder qualifications. DDM did not include a qualified bridge subcontractor in their sub-contractors for the project when submitting their bid proposal since they did not identify previous in-house bridge project experience.

Kimley-Horn contacted references provided by DDM. None of the projects provided included bridge construction. The references with whom we spoke indicated that they would work with DDM again.

Kimley Horn learned of other projects performed by DDM that they did not list in the required bid forms (at least one current and one past) that had issues throughout the project and staff turnover. In addition, both projects incurred liquidated damages. Kimley-Horn learned of these projects independently and reached out to those respective municipalities.

Kimley-Horn contacted references provided by Tiseo. The projects listed were representative of this project and several included bridge construction.

Tiseo did provide project experience that includes bridge construction, and they did include a bridge sub-contractor in their qualifications included with their bid proposal. Tiseo's projects were completed on time and within budget. The references with whom we spoke indicated that they would work with Tiseo again.

It is our understanding that based on bid submittal requirements and irregularities identified in DDM's bid package submittal, the Town of Addison may determine that DDM's bid is considered non-responsive. In addition, they have no previous identified project experience with bridge construction which is a major element of this project.

With that understanding and based on the information gathered, it does not appear that DDM meets the qualifications for the project and has bid irregularities rendering their bid package non-responsive. It appears Tiseo's bid package is the lowest responsive bid and meets the qualifications for the project. Therefore, based on the information provided, Kimley-Horn recommends awarding the contract to Tiseo.

Enclosed is a copy of the bid tabulation for your reference.
Sincerely,

KIMLEY-HORN AND ASSOCIATES, INC.



Brian J. LaFoy, P.E., ENV SP

# BID TABULATION

KIMLEY-HORN AND ASSOCIATES, INC.

Project Name: Bella Lane South Extension & Alpha Road Connector

Project No. 2021-01C

Town of Addison, Texas
Date: 10/25/2021
KHA Job No. 63543031

| Legend |
|---|
| RED text indicates a calculation error on the bidders submitted bid form, but it is corrected on bid tab for accuracy. |

| | | | | BIDDER 1 | | BIDDER 2 | | BIDDER 3 | | BIDDER 4 | | BIDDER 5 | | BIDDER 6 | | BIDDER 7 | |
|---|---|---|---|---|---|---|---|---|---|---|---|---|---|---|---|---|---|
| | | | | DDM Construction Corporation<br>4006 Belt Line Rd, Ste. 230<br>Addison, TX 75001 | | Tiseo Paving Co.<br>419 US HWY 80E<br>Mesquite, TX 75150 | | Rebcon, Inc.<br>1868 W. Northwest Hwy<br>Dallas, TX 75220 | | Reliable Paving Inc.<br>1903 N. Peyco Dr<br>Arlington, TX 76001 | | Ragle, Inc.<br>9003 Airport Fwy Suite G270<br>North Richland Hills, TX 76180 | | Mario Sinacola & Sons, Excavating, Inc.<br>10950 Research Road<br>Frisco, TX 75033 | | McMahon Contracting and Construction, LLC<br>3019 Roy Orr Blvd<br>Grand Prairoe, TX 75050 | |
| **Item No.** | **Item Description** | **Quantity** | **Unit** | **Unit Price** | **Item Cost** | **Unit Price** | **Item Cost** | **Unit Price** | **Item Cost** | **Unit Price** | **Item Cost** | **Unit Price** | **Item Cost** | **Unit Price** | **Item Cost** | **Unit Price** | **Item Cost** |
| **BASE BID - STREET IMPROVEMENTS** | | | | | | | | | | | | | | | | | |
| P1 | MOBILIZATION (5% MAX) | 1 | LS | $145,000.99 | $145,000.99 | $125,000.00 | $125,000.00 | $75,000.00 | $75,000.00 | $140,000.00 | $140,000.00 | $180,000.00 | $180,000.00 | $180,000.00 | $180,000.00 | $137,313.65 | $137,313.65 |
| P2 | BARRICADES, SIGNS, AND TRAFFIC HANDLING | 1 | LS | $11,000.00 | $11,000.00 | $153,400.00 | $153,400.00 | $40,000.00 | $40,000.00 | $40,000.00 | $40,000.00 | $50,000.00 | $50,000.00 | $55,000.00 | $55,000.00 | $22,704.78 | $22,704.78 |
| P3 | PROJECT SIGN | 2 | EA | $1,000.00 | $2,000.00 | $550.00 | $1,100.00 | $605.00 | $1,210.00 | $525.00 | $1,050.00 | $1,000.00 | $2,000.00 | $2,000.00 | $4,000.00 | $442.50 | $885.00 |
| P4 | GENERAL SITE PREPARATION | 1 | LS | $10,000.00 | $10,000.00 | $186,000.00 | $186,000.00 | $61,850.00 | $61,850.00 | $125,000.00 | $125,000.00 | $180,000.00 | $180,000.00 | $130,000.00 | $130,000.00 | $223,028.36 | $223,028.36 |
| P5 | REMOVE EX HEADWALL | 1 | EA | $1,700.00 | $1,700.00 | $1,890.00 | $1,890.00 | $2,000.00 | $2,000.00 | $867.00 | $867.00 | $1,500.00 | $1,500.00 | $775.00 | $775.00 | $1,766.74 | $1,766.74 |
| P6 | REMOVAL OF EX RCP | 19 | LF | $49.00 | $931.00 | $11.55 | $219.45 | $12.00 | $228.00 | $68.00 | $1,292.00 | $10.00 | $190.00 | $160.00 | $3,040.00 | $42.04 | $798.76 |
| P7 | REMOVE EXISTING CONCRETE SIDEWALK/RAMPS | 425 | SY | $8.00 | $3,400.00 | $7.35 | $3,123.75 | $12.50 | $5,312.50 | $15.00 | $6,375.00 | $15.00 | $6,375.00 | $25.00 | $10,625.00 | $12.75 | $5,418.75 |
| P8 | REMOVE EXISTING ASPHALT PAVEMENT | 480 | SY | $11.00 | $5,280.00 | $9.98 | $4,790.40 | $12.00 | $5,760.00 | $10.00 | $4,800.00 | $6.00 | $2,880.00 | $12.00 | $5,760.00 | $12.75 | $6,120.00 |
| P9 | REMOVE EXISTING TREES | 116 | EA | $249.00 | $28,884.00 | $315.00 | $36,540.00 | $300.00 | $34,800.00 | $940.00 | $109,040.00 | $600.00 | $69,600.00 | $400.00 | $46,400.00 | $586.37 | $68,018.92 |
| P10 | UNCLASSIFIED STREET EXCAVATION | 1 | LS | $23,000.00 | $23,000.00 | $3,675.00 | $3,675.00 | $77,000.00 | $77,000.00 | $86,000.00 | $86,000.00 | $50,000.00 | $50,000.00 | $80,000.00 | $80,000.00 | $8,050.78 | $8,050.78 |
| P11 | BORROW AND SPOIL (ROADWAY) | 1 | LS | $70,000.00 | $70,000.00 | $124,740.00 | $124,740.00 | $120,000.00 | $120,000.00 | $17,000.00 | $17,000.00 | $280,000.00 | $280,000.00 | $55,000.00 | $55,000.00 | $973,122.05 | $973,122.05 |
| P12 | MOISTURE TREATED SUBGRADE | 7,180 | SY | $4.00 | $28,720.00 | $3.00 | $21,540.00 | $2.60 | $18,668.00 | $2.50 | $17,950.00 | $1.50 | $10,770.00 | $4.80 | $34,464.00 | $5.26 | $37,766.80 |
| P13 | 6" LIME STABILIZED SUBGRADE | 1,145 | SY | $9.00 | $10,305.00 | $9.00 | $10,305.00 | $7.50 | $8,587.50 | $15.00 | $17,175.00 | $4.00 | $4,580.00 | $20.00 | $22,900.00 | $7.08 | $8,106.60 |
| P14 | HYDRATED LIME | 25 | TON | $210.00 | $5,250.00 | $203.00 | $5,075.00 | $200.00 | $5,000.00 | $235.00 | $5,875.00 | $165.00 | $4,125.00 | $195.00 | $4,875.00 | $193.52 | $4,838.00 |
| P15 | 4" TYP B HMAC (TXDOT) | 30 | TON | $320.00 | $9,600.00 | $200.00 | $6,000.00 | $300.00 | $9,000.00 | $285.00 | $8,550.00 | $290.00 | $8,700.00 | $300.00 | $9,000.00 | $324.50 | $9,735.00 |
| P16 | 8" REINFORCED CONCRETE PAVEMENT (STREET) | 6,299 | SY | $72.00 | $453,528.00 | $62.25 | $392,112.75 | $88.00 | $554,312.00 | $76.00 | $478,724.00 | $70.50 | $444,079.50 | $90.00 | $566,910.00 | $61.67 | $388,459.33 |
| P17 | 10" PORTLAND CEMENT CONC PAVEMENT W/ 6" MONO CURB ) | 1,050 | SY | $95.00 | $99,750.00 | $82.05 | $86,152.50 | $116.00 | $121,800.00 | $87.00 | $91,350.00 | $74.00 | $77,700.00 | $100.00 | $105,000.00 | $95.37 | $100,138.50 |
| P18 | REINFORCED CONCRETE STREET HEADERS | 540 | LF | $15.00 | $8,100.00 | $30.00 | $16,200.00 | $15.00 | $8,100.00 | $15.00 | $8,100.00 | $25.00 | $13,500.00 | $25.00 | $13,500.00 | $25.42 | $13,726.80 |
| P19 | 5" CONCRETE SIDEWALK | 3,100 | SY | $53.00 | $164,300.00 | $51.98 | $161,138.00 | $62.00 | $192,200.00 | $60.00 | $186,000.00 | $45.00 | $139,500.00 | $50.00 | $155,000.00 | $61.95 | $192,045.00 |
| P20 | ACESSIBLE RAMP | 12 | EA | $2,100.00 | $25,200.00 | $2,184.00 | $26,208.00 | $2,500.00 | $30,000.00 | $2,550.00 | $30,600.00 | $1,500.00 | $18,000.00 | $2,500.00 | $30,000.00 | $2,596.00 | $31,152.00 |
| P21 | RAIL (HANDRAIL) (TY F) | 35 | LF | $150.00 | $5,250.00 | $210.00 | $7,350.00 | $222.00 | $7,770.00 | $224.00 | $7,840.00 | $121.00 | $4,235.00 | $235.00 | $8,225.00 | $184.44 | $6,455.40 |
| P22 | INSTALL NEW SIGN AND SIGN POST ASSEMBLY | 20 | EA | $530.00 | $10,600.00 | $782.25 | $15,645.00 | $600.00 | $12,000.00 | $542.00 | $10,840.00 | $575.00 | $11,500.00 | $745.00 | $14,900.00 | $879.10 | $17,582.00 |
| P23 | REFL PAV MRKG TY I & TY II (W) 4" SOLID | 3,300 | LF | $1.40 | $4,620.00 | $1.21 | $3,993.00 | $0.83 | $2,739.00 | $2.00 | $6,600.00 | $1.25 | $4,125.00 | $1.15 | $3,795.00 | $1.36 | $4,488.00 |
| P24 | REFL PAV MRKG TY I & TY II (Y) 4" SOLID | 3,050 | LF | $1.40 | $4,270.00 | $1.21 | $3,690.50 | $0.83 | $2,531.50 | $2.00 | $6,100.00 | $1.25 | $3,812.50 | $1.15 | $3,507.50 | $1.36 | $4,148.00 |
| P25 | REFL PAV MRKG TY I & TY II (Y) 4" BROKEN | 140 | LF | $1.60 | $224.00 | $4.20 | $588.00 | $0.83 | $116.20 | $2.00 | $280.00 | $1.50 | $210.00 | $4.00 | $560.00 | $4.72 | $660.80 |
| P26 | REFL PAV MRKG TY I & TY II (W) ARROW | 3 | EA | $160.00 | $480.00 | $152.25 | $456.75 | $215.00 | $645.00 | $414.00 | $1,242.00 | $150.00 | $450.00 | $145.00 | $435.00 | $171.10 | $513.30 |
| P27 | REFL PAV MRKG TY I & TY II (W) 24" STOP BAR MARKING | 31 | LF | $8.00 | $248.00 | $8.56 | $265.36 | $11.00 | $341.00 | $19.00 | $589.00 | $7.00 | $217.00 | $8.15 | $252.65 | $9.62 | $298.22 |
| P28 | REFL PAV MRKG TY I & TY II (W) 5' X 8' CROSSWALK WITH 5' SPACE | 3 | EA | $100.00 | $300.00 | $299.25 | $897.75 | $470.00 | $1,410.00 | $490.00 | $1,470.00 | $93.00 | $279.00 | $285.00 | $855.00 | $336.30 | $1,008.90 |
| P29 | REFL PAV MRKG TY I & TY II (W) 24"X 8" CROSSWALK WITH 4' SPACE | 15 | EA | $65.00 | $975.00 | $99.75 | $1,496.25 | $88.00 | $1,320.00 | $95.00 | $1,425.00 | $60.00 | $900.00 | $95.00 | $1,425.00 | $112.10 | $1,681.50 |
| P30 | REFL PAV MRKG TY I (W) 24" TRIANGLE | 21 | EA | $42.00 | $882.00 | $50.40 | $1,058.40 | $60.00 | $1,260.00 | $61.00 | $1,281.00 | $38.00 | $798.00 | $48.00 | $1,008.00 | $56.64 | $1,189.44 |
| P31 | REMOVE AND RELOCATE EX GATE | 1 | EA | $700.00 | $700.00 | $2,730.00 | $2,730.00 | $2,500.00 | $2,500.00 | $5,700.00 | $5,700.00 | $2,600.00 | $2,600.00 | $5,800.00 | $5,800.00 | $3,068.00 | $3,068.00 |
| P32 | ONCOR DUCT CROSSING COORDINATION | 1 | LS | $4,000.00 | $4,000.00 | $3,000.00 | $3,000.00 | $3,500.00 | $3,500.00 | $24,000.00 | $24,000.00 | $1,500.00 | $1,500.00 | $1,000.00 | $1,000.00 | $15,300.38 | $15,300.38 |
| **TOTAL:** | **BASE BID - STREET IMPROVEMENTS TOTAL** | | | | **$1,138,497.99** | | **$1,406,380.86** | | **$1,406,960.70** | | **$1,443,115.00** | | **$1,574,126.00** | | **$1,554,012.15** | | **$2,289,589.76** |
| **BRIDGE OVER FARMERS BRANCH CREEK** | | | | | | | | | | | | | | | | | |
| B1 | FLOWABLE BACKFILL | 443 | CY | $180.00 | $79,740.00 | $168.00 | $74,424.00 | $113.00 | $50,059.00 | $192.00 | $85,056.00 | $50.00 | $22,150.00 | $165.00 | $73,095.00 | $188.56 | $83,532.08 |
| B2 | DRILL SHAFT (18 IN) | 148 | LF | $102.00 | $15,096.00 | $126.00 | $18,648.00 | $91.00 | $13,468.00 | $144.00 | $21,312.00 | $105.00 | $15,540.00 | $95.00 | $14,060.00 | $135.41 | $20,040.68 |
| B3 | DRILL SHAFT (36 IN) | 296 | LF | $278.00 | $82,288.00 | $210.00 | $62,160.00 | $188.00 | $55,648.00 | $240.00 | $71,040.00 | $185.00 | $54,760.00 | $175.00 | $51,800.00 | $258.57 | $76,536.72 |
| B4 | CL C CONC (ABUT) (HPC) | 100 | CY | $720.00 | $72,000.00 | $1,050.00 | $105,000.00 | $880.00 | $88,000.00 | $1,200.00 | $120,000.00 | $700.00 | $70,000.00 | $1,200.00 | $120,000.00 | $863.11 | $86,311.00 |
| B5 | REINF CONC SLAB (HPC) | 2,648 | SF | $43.00 | $113,864.00 | $29.40 | $77,851.20 | $26.00 | $68,848.00 | $34.00 | $90,032.00 | $30.00 | $79,440.00 | $40.00 | $105,920.00 | $27.03 | $71,575.44 |
| B6 | BRIDGE SIDEWALK (HPC) | 980 | SF | $19.00 | $18,620.00 | $16.80 | $16,464.00 | $17.00 | $16,660.00 | $19.00 | $18,620.00 | $10.00 | $9,800.00 | $10.00 | $9,800.00 | $14.96 | $14,660.80 |
| B7 | APPROACH SLAB (HPC) | 83 | CY | $705.00 | $58,515.00 | $735.00 | $61,005.00 | $680.00 | $56,440.00 | $840.00 | $69,720.00 | $500.00 | $41,500.00 | $715.00 | $59,345.00 | $588.56 | $48,850.48 |
| B8 | PRESTR CONC I-GIRDER (TX40) | 329 | LF | $250.00 | $82,250.00 | $273.00 | $89,817.00 | $280.00 | $92,120.00 | $312.00 | $102,648.00 | $500.00 | $164,500.00 | $240.00 | $78,960.00 | $240.24 | $79,038.96 |
| B9 | RIPRAP (CONC) (CL B) (RR8&RR9) | 76 | CY | $680.00 | $51,680.00 | $630.00 | $47,880.00 | $605.00 | $45,980.00 | $720.00 | $54,720.00 | $470.00 | $35,720.00 | $600.00 | $45,600.00 | $598.81 | $45,509.56 |
| B10 | RIPRAP (STONE PROTECTION) (24 IN) | 1,470 | CY | $160.00 | $235,200.00 | $125.00 | $183,750.00 | $165.00 | $242,550.00 | $166.00 | $244,020.00 | $110.00 | $161,700.00 | $170.00 | $249,900.00 | $107.57 | $158,127.90 |
| B11 | ELASTOMERIC BEARING (LAMINATED) | 8 | EA | $550.00 | $4,400.00 | $472.50 | $3,780.00 | $350.00 | $2,800.00 | $540.00 | $4,320.00 | $71.00 | $568.00 | $400.00 | $3,200.00 | $393.55 | $3,148.40 |
| B12 | STR STEEL (MISCELLANEOUS BRIDGE) (BS-EJCP) | 186 | LB | $40.00 | $7,440.00 | $18.90 | $3,515.40 | $22.00 | $4,092.00 | $22.00 | $4,092.00 | $14.00 | $2,604.00 | $16.00 | $2,976.00 | $19.71 | $3,666.06 |
| B13 | RAIL (TY C221) (HPC) | 238 | LF | $340.00 | $80,920.00 | $199.50 | $47,481.00 | $120.00 | $28,560.00 | $228.00 | $54,264.00 | $151.00 | $35,938.00 | $180.00 | $42,840.00 | $132.62 | $31,563.56 |
| B14 | SEALED EXPANSION JOINT (4 IN) (SEJ - M) | 51 | LF | $163.00 | $8,313.00 | $178.50 | $9,103.50 | $137.50 | $7,012.50 | $205.00 | $10,455.00 | $150.00 | $7,650.00 | $190.00 | $9,690.00 | $153.02 | $7,804.02 |
| B15 | MTL BEAM GD FEN TRANS (THRIE-BEAM) | 3 | EA | $2,100.00 | $6,300.00 | $2,310.00 | $6,930.00 | $2,000.00 | $6,000.00 | $2,641.00 | $7,923.00 | $2,500.00 | $7,500.00 | $3,520.00 | $10,560.00 | $1,180.00 | $3,540.00 |
| B16 | TERMINAL ANCHOR SECTION | 3 | EA | $3,200.00 | $9,600.00 | $3,465.00 | $10,395.00 | $3,000.00 | $9,000.00 | $3,962.00 | $11,886.00 | $1,000.00 | $3,000.00 | $4,280.00 | $12,840.00 | $2,714.00 | $8,142.00 |
| **TOTAL:** | **BRIDGE OVER FARMERS BRANCH CREEK BID TOTAL** | | | | **$926,226.00** | | **$818,204.10** | | **$787,237.50** | | **$970,108.00** | | **$712,370.00** | | **$890,586.00** | | **$742,047.66** |
| **BASE BID - STORM SYSTEM IMPROVEMENTS** | | | | | | | | | | | | | | | | | |
| D1 | 18" RCP CLASS III | 490 | LF | $95.00 | $46,550.00 | $77.70 | $38,073.00 | $81.00 | $39,690.00 | $134.00 | $65,660.00 | $55.00 | $26,950.00 | $120.00 | $58,800.00 | $74.16 | $36,338.40 |
| D2 | 24" RCP CLASS III | 285 | LF | $100.00 | $28,500.00 | $98.70 | $28,129.50 | $103.00 | $29,355.00 | $163.00 | $46,455.00 | $70.00 | $19,950.00 | $125.00 | $35,625.00 | $95.08 | $27,097.80 |
| D3 | 54" RCP CLASS III | 95 | LF | $330.00 | $31,350.00 | $326.55 | $31,022.25 | $342.00 | $32,490.00 | $446.00 | $42,370.00 | $160.00 | $15,200.00 | $325.00 | $30,875.00 | $336.62 | $31,978.90 |
| D4 | 6' CURB INLET | 4 | EA | $5,800.00 | $23,200.00 | $5,145.00 | $20,580.00 | $5,400.00 | $21,600.00 | $5,778.00 | $23,112.00 | $5,600.00 | $22,400.00 | $6,800.00 | $27,200.00 | $5,133.00 | $20,532.00 |
| D5 | CONCRETE HEADWALL (CHFW-0) | 3 | EA | $8,974.00 | $26,922.00 | $6,930.00 | $20,790.00 | $7,200.00 | $21,600.00 | $7,953.00 | $23,859.00 | $11,000.00 | $33,000.00 | $8,000.00 | $24,000.00 | $6,938.40 | $20,815.20 |
| D6 | 18" RCP 2:1 SET TY II HEADWALL | 1 | EA | $1,100.00 | $1,100.00 | $2,520.00 | $2,520.00 | $2,600.00 | $2,600.00 | $3,604.00 | $3,604.00 | $1,300.00 | $1,300.00 | $3,200.00 | $3,200.00 | $2,478.00 | $2,478.00 |
| D7 | 18" RCP 6:1 SET TY II HEADWALL | 4 | EA | $1,400.00 | $5,600.00 | $3,045.00 | $12,180.00 | $3,100.00 | $12,400.00 | $4,333.00 | $17,332.00 | $1,300.00 | $5,200.00 | $3,500.00 | $14,000.00 | $2,950.00 | $11,800.00 |
| D8 | 24" RCP 6:1 SET TY II HEADWALL | 4 | EA | $1,700.00 | $6,800.00 | $4,200.00 | $16,800.00 | $4,400.00 | $17,600.00 | $5,040.00 | $20,160.00 | $2,000.00 | $8,000.00 | $3,700.00 | $14,800.00 | $4,130.00 | $16,520.00 |
| D9 | RIPRAP (STONE PROTECTION) (12 IN) (CHFW-0 HEADWALL) | 12 | CY | $270.00 | $3,240.00 | $131.25 | $1,575.00 | $135.00 | $1,620.00 | $288.00 | $3,456.00 | $226.00 | $2,712.00 | $500.00 | $6,000.00 | $107.64 | $1,291.68 |
| D10 | TRENCH EXCAVATION PROTECTION (STORM SYSTEM) | 870 | LF | $1.00 | $870.00 | $1.05 | $913.50 | $1.10 | $957.00 | $2.80 | $2,436.00 | $1.00 | $870.00 | $2.00 | $1,740.00 | $1.22 | $1,061.40 |
| **TOTAL:** | **BASE BID - STORM SYSTEM IMPROVEMENTS TOTAL** | | | | **$174,132.00** | | **$172,583.25** | | **$179,912.00** | | **$248,444.00** | | **$135,582.00** | | **$216,240.00** | | **$169,913.38** |

BID TABULATION
KIMLEY-HORN AND ASSOCIATES, INC.

Project Name: Bella Lane South Extension & Alpha Road Connector

Project No. 2021-01C

Town of Addison, Texas
Date: 10/25/2021
KHA Job No. 63543031

| Legend |
|---|
| RED text indicates a calculation error on the bidders submitted bid form, but it is corrected on bid tab for accuracy. |

| | | | | BIDDER 1 | | BIDDER 2 | | BIDDER 3 | | BIDDER 4 | | BIDDER 5 | | BIDDER 6 | | BIDDER 7 | |
|---|---|---|---|---|---|---|---|---|---|---|---|---|---|---|---|---|---|
| | | | | DDM Construction Corporation<br>4006 Belt Line Rd, Ste. 230<br>Addison, TX 75001 | | Tiseo Paving Co.<br>419 US HWY 80E<br>Mesquite, TX 75150 | | Rebcon, Inc.<br>1868 W. Northwest Hwy<br>Dallas, TX 75220 | | Reliable Paving Inc.<br>1903 N. Peyco Dr<br>Arlington, TX 76001 | | Ragle, Inc.<br>9003 Airport Fwy Suite G270<br>North Richland Hills, TX 76180 | | Mario Sinacola & Sons, Excavating, Inc.<br>10950 Research Road<br>Frisco, TX 75033 | | McMahon Contracting and Construction, LLC<br>3019 Roy Orr Blvd<br>Grand Prairoe, TX 75050 | |
| **Item No.** | **Item Description** | **Quantity** | **Unit** | **Unit Price** | **Item Cost** | **Unit Price** | **Item Cost** | **Unit Price** | **Item Cost** | **Unit Price** | **Item Cost** | **Unit Price** | **Item Cost** | **Unit Price** | **Item Cost** | **Unit Price** | **Item Cost** |
| **BASE BID - DETENTION POND IMPROVEMENTS** | | | | | | | | | | | | | | | | | |
| H1 | UNCLASSIFIED POND AND CREEK EXCAVATION | 1 | LS | $140,000.00 | $140,000.00 | $60,375.00 | $60,375.00 | $80,000.00 | $80,000.00 | $165,000.00 | $165,000.00 | $500,000.00 | $500,000.00 | $280,000.00 | $280,000.00 | $100,634.68 | $100,634.68 |
| H2 | BORROW AND SPOIL (DETENTION POND AND CREEK) | 1 | LS | $3,600.00 | $3,600.00 | $6,300.00 | $6,300.00 | $20,000.00 | $20,000.00 | $26,000.00 | $26,000.00 | $15,000.00 | $15,000.00 | $145,000.00 | $145,000.00 | $34,420.45 | $34,420.45 |
| H3 | BORROW AND SPOIL (DETENTION POND AND CREEK) (SELECT FILL) | 1 | LS | $40,000.00 | $40,000.00 | $28,224.00 | $28,224.00 | $50,000.00 | $50,000.00 | $55,000.00 | $55,000.00 | $30,000.00 | $30,000.00 | $18,000.00 | $18,000.00 | $25,892.04 | $25,892.04 |
| H4 | RIPRAP (CONC) (CL B) (RR8&RR9) (DETENTION POND) | 6 | CY | $700.00 | $4,200.00 | $716.10 | $4,296.60 | $700.00 | $4,200.00 | $363.00 | $2,178.00 | $615.00 | $3,690.00 | $800.00 | $4,800.00 | $1,181.46 | $7,088.76 |
| H5 | RIPRAP (STONE PROTECTION) (24 IN) (DETENTION POND) | 910 | CY | $150.00 | $136,500.00 | $110.25 | $100,327.50 | $165.00 | $150,150.00 | $200.00 | $182,000.00 | $110.00 | $100,100.00 | $170.00 | $154,700.00 | $107.57 | $97,888.70 |
| H6 | CONCRETE OUTFALL STUCTURE | 7 | CY | $1,300.00 | $9,100.00 | $2,415.00 | $16,905.00 | $2,500.00 | $17,500.00 | $850.00 | $5,950.00 | $1,100.00 | $7,700.00 | $1,200.00 | $8,400.00 | $1,181.47 | $8,270.29 |
| **TOTAL:** | **BASE BID - DETENTION POND IMPROVEMENTS TOTAL** | | | | **$333,400.00** | | **$216,428.10** | | **$321,850.00** | | **$436,128.00** | | **$656,490.00** | | **$610,900.00** | | **$274,194.92** |
| **BASE BID - LANDSCAPE IMPROVEMENTS AND EROSION CONTROL** | | | | | | | | | | | | | | | | | |
| L1 | HYDRAULIC MULCHING WITH 4" TOPSOIL | 45,490 | SY | $1.60 | $72,784.00 | $2.89 | $131,466.10 | $4.50 | $204,705.00 | $2.50 | $113,725.00 | $1.30 | $59,137.00 | $1.00 | $45,490.00 | $3.03 | $137,834.70 |
| L2 | SEDIMENT CONTROL FENCE (INSTALL/MAINTAIN/REMOVE) | 7,475 | LF | $3.60 | $26,910.00 | $1.68 | $12,558.00 | $2.18 | $16,295.50 | $2.24 | $16,744.00 | $4.00 | $29,900.00 | $3.79 | $28,330.25 | $2.62 | $19,584.50 |
| L3 | STABILIZED CONSTRUCTION EXIT/ENTRANCE | 180 | SY | $28.00 | $5,040.00 | $31.50 | $5,670.00 | $31.00 | $5,580.00 | $16.00 | $2,880.00 | $31.69 | $5,704.20 | $40.00 | $7,200.00 | $19.16 | $3,448.80 |
| L4 | INLET PROTECTION (INSTALL/MAINTAIN/REMOVE) | 4 | EA | $270.00 | $1,080.00 | $141.75 | $567.00 | $475.00 | $1,900.00 | $1,200.00 | $4,800.00 | $584.08 | $2,336.32 | $585.00 | $2,340.00 | $139.93 | $559.72 |
| L5 | ROCK CHECK DAM | 65 | LF | $80.00 | $5,200.00 | $42.00 | $2,730.00 | $40.00 | $2,600.00 | $30.00 | $1,950.00 | $56.49 | $3,671.85 | $60.00 | $3,900.00 | $40.88 | $2,657.20 |
| L6 | STORM WATER POLLUTION PREVENTION PLAN | 1 | LS | $1,000.00 | $1,000.00 | $8,500.00 | $8,500.00 | $40,000.00 | $40,000.00 | $7,000.00 | $7,000.00 | $180,000.00 | $180,000.00 | $2,500.00 | $2,500.00 | $4,939.48 | $4,939.48 |
| **TOTAL:** | **BASE BID - LANDSCAPE IMPROVEMENTS AND EROSION CONTROL TOTAL** | | | | **$112,014.00** | | **$161,491.10** | | **$271,080.50** | | **$147,099.00** | | **$280,749.37** | | **$89,760.25** | | **$169,024.40** |
| **BASE BID - WATER IMPROVEMENTS** | | | | | | | | | | | | | | | | | |
| W1 | 8" PVC WATER LINE | 355 | LF | $82.00 | $29,110.00 | $81.90 | $29,074.50 | $85.00 | $30,175.00 | $172.00 | $61,060.00 | $60.00 | $21,300.00 | $120.00 | $42,600.00 | $111.95 | $39,742.25 |
| W2 | 12" PVC WATER LINE | 575 | LF | $110.00 | $63,250.00 | $98.70 | $56,752.50 | $103.00 | $59,225.00 | $208.00 | $119,600.00 | $62.00 | $35,650.00 | $125.00 | $71,875.00 | $124.21 | $71,420.75 |
| W3 | 8 " GATE VALVE | 2 | EA | $2,500.00 | $5,000.00 | $1,890.00 | $3,780.00 | $2,000.00 | $4,000.00 | $2,865.00 | $5,730.00 | $1,500.00 | $3,000.00 | $3,600.00 | $7,200.00 | $2,249.06 | $4,498.12 |
| W4 | 12" GATE VALVE | 2 | EA | $4,000.00 | $8,000.00 | $3,255.00 | $6,510.00 | $3,400.00 | $6,800.00 | $4,350.00 | $8,700.00 | $2,200.00 | $4,400.00 | $5,500.00 | $11,000.00 | $3,543.98 | $7,087.96 |
| W5 | FIRE HYDRANT ASSEMBLY | 1 | EA | $4,100.00 | $4,100.00 | $4,935.00 | $4,935.00 | $5,100.00 | $5,100.00 | $4,650.00 | $4,650.00 | $3,200.00 | $3,200.00 | $10,500.00 | $10,500.00 | $4,082.14 | $4,082.14 |
| W6 | REMOVE EXISTING 12"  AC WATER LINE | 8 | LF | $400.00 | $3,200.00 | $42.00 | $336.00 | $44.00 | $352.00 | $615.00 | $4,920.00 | $101.00 | $808.00 | $125.00 | $1,000.00 | $115.02 | $920.16 |
| W7 | ABANDON EXISTING ASBESTOS PIPE IN PLACE | 500 | LF | $30.00 | $15,000.00 | $21.00 | $10,500.00 | $22.00 | $11,000.00 | $30.00 | $15,000.00 | $175.00 | $87,500.00 | $28.00 | $14,000.00 | $17.67 | $8,835.00 |
| W8 | WATER TESTING | 1 | LS | $3,500.00 | $3,500.00 | $1,312.50 | $1,312.50 | $1,300.00 | $1,300.00 | $2,910.00 | $2,910.00 | $7,500.00 | $7,500.00 | $6,500.00 | $6,500.00 | $2,802.50 | $2,802.50 |
| W9 | TRENCH EXCAVATION PROTECTION (WATER SYSTEM) | 930 | LF | $1.00 | $930.00 | $1.05 | $976.50 | $1.10 | $1,023.00 | $1.45 | $1,348.50 | $1.00 | $930.00 | $2.00 | $1,860.00 | $1.03 | $957.90 |
| **TOTAL:** | **BASE BID - WATER IMPROVEMENTS TOTAL** | | | | **$132,090.00** | | **$114,177.00** | | **$118,975.00** | | **$223,918.50** | | **$164,288.00** | | **$166,535.00** | | **$140,346.78** |
| **BASE BID - SANITARY SEWER IMPROVEMENTS** | | | | | | | | | | | | | | | | | |
| SS1 | 8" PVC SSWR LINE | 315 | LF | $61.00 | $19,215.00 | $54.60 | $17,199.00 | $58.00 | $18,270.00 | $170.00 | $53,550.00 | $60.00 | $18,900.00 | $105.00 | $33,075.00 | $59.65 | $18,789.75 |
| SS2 | 4' STANDARD MANHOLE | 1 | EA | $5,100.00 | $5,100.00 | $6,510.00 | $6,510.00 | $7,000.00 | $7,000.00 | $5,065.00 | $5,065.00 | $25,000.00 | $25,000.00 | $12,000.00 | $12,000.00 | $6,054.83 | $6,054.83 |
| SS3 | CEMENT STABILIZED SAND ENCASEMENT (MIN. 10% CEMENT/CY) | 20 | LF | $60.00 | $1,200.00 | $47.25 | $945.00 | $50.00 | $1,000.00 | $195.00 | $3,900.00 | $30.00 | $600.00 | $37.00 | $740.00 | $97.17 | $1,943.40 |
| SS4 | SANITARY SEWER CCTV INSPECTION | 1 | LS | $720.00 | $720.00 | $661.50 | $661.50 | $700.00 | $700.00 | $2,910.00 | $2,910.00 | $1,000.00 | $1,000.00 | $3,500.00 | $3,500.00 | $21,924.90 | $21,924.90 |
| SS5 | TRENCH EXCAVATION PROTECTION (SANITARY SEWER IMPROVEMENTS) | 315 | LF | $2.00 | $630.00 | $1.05 | $330.75 | $1.10 | $346.50 | $2.80 | $882.00 | $4.80 | $1,512.00 | $2.00 | $630.00 | $1.02 | $321.30 |
| **TOTAL:** | **BASE BID - SANITARY SEWER IMPROVEMENTS  TOTAL** | | | | **$26,865.00** | | **$25,646.25** | | **$27,316.50** | | **$66,307.00** | | **$47,012.00** | | **$49,945.00** | | **$49,034.18** |
| **BASE BID - SANITARY SEWER IMPROVEMENTS** | | | | | | | | | | | | | | | | | |
| O1 | OWNER'S CONTINGENCY | 1 | LS | $85,000.00 | $85,000.00 | $85,000.00 | $85,000.00 | $85,000.00 | $85,000.00 | $85,000.00 | $85,000.00 | $85,000.00 | $85,000.00 | $85,000.00 | $85,000.00 | $85,000.00 | $85,000.00 |
| **TOTAL:** | **BASE BID - OWNER'S CONTINGENCY TOTAL** | | | | **$85,000.00** | | **$85,000.00** | | **$85,000.00** | | **$85,000.00** | | **$85,000.00** | | **$85,000.00** | | **$85,000.00** |

| | | | | | | | | | |
|---|---|---|---|---|---|---|---|---|---|
| **TOTAL AMOUNT BASE BID - STREET IMPROVEMENTS** | **$1,138,497.99** | **$1,406,380.86** | **$1,406,960.70** | **$1,443,115.00** | **$1,574,126.00** | **$1,554,012.15** | **$2,289,589.76** |
| **TOTAL AMOUNT BRIDGE OVER FARMERS BRANCH CREEK** | **$926,226.00** | **$818,204.10** | **$787,237.50** | **$970,108.00** | **$712,370.00** | **$890,586.00** | **$742,047.66** |
| **TOTAL AMOUNT BASE BID - STORM SYSTEM IMPROVEMENTS** | **$174,132.00** | **$172,583.25** | **$179,912.00** | **$248,444.00** | **$135,582.00** | **$216,240.00** | **$169,913.38** |
| **TOTAL AMOUNT BASE BID - DETENTION POND IMPROVEMENTS** | **$333,400.00** | **$216,428.10** | **$321,850.00** | **$436,128.00** | **$656,490.00** | **$610,900.00** | **$274,194.92** |
| **TOTAL AMOUNT BASE BID - LANDSCAPE IMPROVEMENTS AND EROSION CONTROL** | **$112,014.00** | **$161,491.10** | **$271,080.50** | **$147,099.00** | **$280,749.37** | **$89,760.25** | **$169,024.40** |
| **TOTAL AMOUNT BASE BID - WATER IMPROVEMENTS** | **$132,090.00** | **$114,177.00** | **$118,975.00** | **$223,918.50** | **$164,288.00** | **$166,535.00** | **$140,346.78** |
| **TOTAL AMOUNT BASE BID - SANITARY SEWER IMPROVEMENTS** | **$26,865.00** | **$25,646.25** | **$27,316.50** | **$66,307.00** | **$47,012.00** | **$49,945.00** | **$49,034.18** |
| **TOTAL AMOUNT BASE BID - SANITARY SEWER IMPROVEMENTS** | **$85,000.00** | **$85,000.00** | **$85,000.00** | **$85,000.00** | **$85,000.00** | **$85,000.00** | **$85,000.00** |
| **TOTAL AMOUNT AWARDED** | **$2,928,224.99** | **$2,999,910.66** | **$3,198,332.20** | **$3,620,119.50** | **$3,655,617.37** | **$3,662,978.40** | **$3,919,151.08** |

**SPECIFICATIONS AND CONTRACT DOCUMENTS**

**FOR THE CONSTRUCTION OF**

# BELLA LANE SOUTH EXTENSTION & ALPHA ROAD CONNECTOR

**TOWN OF ADDISON, TEXAS**
**PUBLIC WORKS AND ENGINEERING SERVICES**
**BID NUMBER 21-69**

**SEPTEMBER 2021**

**PREPARED BY**


**2201 West Royal Lane, Ste. 275**

**Irving, Texas 75063**
**(214) 420-5600**




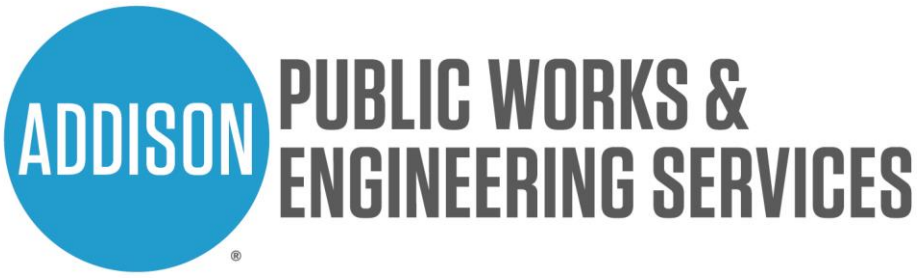


# TOWN OF ADDISON, TEXAS

## MAYOR

**Joe Chow**

## MAYOR PRO TEM:

**Guillermo Quintanilla**

## DEPUTY MAYOR PRO TEM:

**Paul Walden**

## COUNCIL MEMBERS

**Tom Braun**

**Lori Ward**

**Kathryn Wheeler**

**Marlin Willesen**

## CITY MANAGER

**Wesley S. Pierson**

## DIRECTOR OF PUBLIC WORKS AND ENGINEERING SERVICES

**Shannon Hicks, P.E.**

# TABLE OF CONTENTS


**Section AB** **Advertisement for Bids**

**Section IB** **Instructions to Bidders**

**Section PF** **Proposal Form**

**Section BB** **Bid Bond**

**Section BQS** **Bidder Qualification Statement**

**Section CA** **Contract Agreement**

**Section PrB** **Performance Bond**

**Section PyB** **Payment Bond**

**Section MB** **Maintenance Bond**

**Section BP** **Contractor's Affidavit of Bills Paid**

**Section GP** **General Provisions**

***Standard Specifications for Public Works Construction – North Central Texas (5th Edition, 2017)***

**Section SP** **Special Provisions**

**Section PS** **Project Sign**

**Section TS** **Technical Specifications**

***Special Specification 7076: Grouting of Water Mains***

**Section IS** **Additional Insurance Requirements, Town of Addison**

**Appendix A Geotechnical Study**

***Alpha Road Connector – Vitruvian Phase IV (Report: 20212439.001A/DFW20R119268)***

**SECTION AB**

# ADVERTISEMENT FOR BIDS

# ADVERTISEMENT FOR BIDS

1. The Town of Addison is requesting bids for the Bid of the Bella Lane South Extension and Alpha Road Connector. **Bids will be accepted until 2:00 p.m., Thursday, October 21, 2021** at the Finance Building, 5350 Belt Line Rd., Dallas, Texas 75254 – Attention Purchasing Department, at which time responders names and bids will be publicly read aloud. Late bids will not be considered. The plans, specifications, quantities, pre-bid time and date, and other information are available on www.civcastusa.com. The plans, specifications, and quantities for the work to be done are also on file with Public Works & Engineering Services Department, Town of Addison, 16801 Westgrove Drive, Addison, Texas 75001, and such plans, specifications, and quantities may be examined without charge. The Town of Addison reserves the right to waive any formalities, to reject any and all bids, and to select the proposal deemed most advantageous to the Town of Addison.

2. The Contractor shall identify his bid on the outside of the envelope by writing the words **PUBLIC WORKS AND ENGINEERING SERVICES BID NUMBER 21-69, BELLA LANE SOUTH EXTENSION & ALPHA ROAD CONNECTOR.**

   PAPER BIDS SHALL BE REQUIRED. AN ELECTRONIC COPY OF THE BID SHALL BE INCLUDED IN THE ENVELOPE WHEN THE PAPER BID IS SUBMITTED. A USB DRIVE IS PREFERRED.

3. Bids shall be accompanied by a bid bond in the same amount from a reliable surety company licensed by the State of Texas to act as a Surety and be listed on the current U.S. Treasury Listing of Approved Sureties, or a Binder of Insurance executed by a surety company licensed by the State of Texas to act as a surety or its authorized agent as a guarantee that the bidder will enter into a contract and execute a Performance Bond within ten (10) days after notice of award of contract to him.

4. Plans, specifications and bidding documents may be downloaded from www.civcastusa.com. The Town of Addison is a "free buyer", meaning that prospective bidders need only a free registration to sign up for plan updates. Bidders assume all risk for acquiring specs and/or plans from third party sites and plan rooms, as only www.civcastusa.com will be directly updated by Addison.

5. The right is reserved by the Mayor and the City Council as the interests of the City may require to reject any or all bids and to waive any formality in bids received and to select the proposal deemed most advantageous to the City.

6. The Bidder (Proposer) must supply all the information required by the Proposal Form.

7. A Performance Bond, Labor and Material Payment Bond, and Maintenance Bond will be required by the Owner; each Bond shall be in the amount of 100% of the total contract amount. Bonds shall be issued by a surety company licensed by the State of Texas to act as a Surety and be listed on the current U.S. Treasury Listing of Approved Sureties.

8. The Bidder (Proposer) must supply all the information required by the Bidder Qualification Statement.

9. **An optional pre-bid meeting will be held on Thursday, October 7, 2021 at 2:00pm in the The Town of Addison Service Center 16801 Westrgrove Drive, Addison, Texas 75001 A site visit will follow this meeting.**

10. For information on bidding or work to be performed, please submit all questions on www.civcastusa.com. **All questions must be received by 5:00pm on Wednesday, October 13, 2021. All questions received by this deadline will be answered by 5:00pm on Monday, October 18, 2021.**

11. **The project consists of constructing the extension of Bella Lane South from Vitruvian Park to Windmill Circle and connection to Alpha Road from Farmers Branch Creek. The improvements include, but are not limited to, subgrade preparation, concrete pavement, storm sewer pipe, storm sewer structure, water line, bridge construction, and detention pond construction.**

**SECTION IB**

# INSTRUCTIONS TO BIDDERS

# INSTRUCTIONS TO BIDDERS

**A. PROJECT: BELLA LANE SOUTH EXTENSION & ALPHA ROAD CONNECTOR,** in the Town of Addison. The bids will be evaluated as stated in Section "O" of these Instructions to Bidders.

**B. PROJECT DESCRIPTION: The project consists of constructing the extension of Bella Lane South from Vitruvian Park to Windmill Circle and connection to Alpha Road from Farmers Branch Creek. The improvements include, but are not limited to, subgrade preparation, concrete pavement, storm sewer pipe, storm sewer structure, water line, bridge construction, and detention pond construction.**

**C. PROPOSALS:** Proposals must be in accordance with these instructions in order to receive consideration.

**D. DOCUMENTS:** Reference the Contract Agreement for a listing of Contract Documents to be included for this project.

**E. EXAMINATION OF DOCUMENTS AND SITE:** Bidders shall carefully examine the Bidding Documents and the construction site to obtain firsthand knowledge of the scope and the conditions of the Work. Each Contractor, Subcontractor and Sub-subcontractor, by submitting a proposal to perform any portion of the Work, represents and warrants that he has examined the Contract Documents and the site of the Work, and from his own investigation has satisfied himself as to the scope, accessibility, nature and location of the Work; the character of the equipment and other facilities needed for the performance of the Work; the character and extent of other work to be performed; the local conditions; labor availability, practices and jurisdictions; and other circumstances that may affect the performance of the Work. No additional compensation will be allowed by the Owner for the failure of such Contractor, Subcontractor or Sub-subcontractor to inform himself as to conditions affecting the Work.

**F. INTERPRETATION OF DOCUMENTS:** If any person contemplating submitting a bid for the proposed Contract is in doubt as to the meaning of any part of the Drawings, Specifications (Project Manual) or other proposed Contract Documents, he may submit questions to the Town of Addison, no later than 5:00pm on Wednesday, October 13, 2021. All questions received by this deadline will be answered by 5:00pm on Monday, October 18, 2021. Bidders should act promptly and allow sufficient time for a reply to reach them before preparing their bids. Any interpretation or clarification will be in the form of an Addendum duly issued. No alleged verbal interpretation or ruling will be held binding upon the Owner.

**G. SUBSTITUTIONS:** Conditions governing the submission of substitutions for specific materials, products, equipment and processes are in the Special Provisions. Requests for substitutions must be received by the Town of Addison seven (7) calendar days prior to the established bid date.

**H. ADDENDA:** Interpretations, clarifications, additions, deletions and modifications to the Documents during the bidding period will be issued in the form of Addenda and a copy of

such Addenda will be released through www.civcastusa.com. It will be the responsibility of each person who has been issued a set of bid documents to secure all Addenda from www.civcastusa.com. Addenda will be a part of the Bidding Documents and the Contract Documents, and receipt of them shall be acknowledged in the Bid Form. All such interpretations and supplemental instructions will be in the form of written addenda to the contract documents which, if issued, will be released through www.civcastusa.com not later than three (3) calendar days prior to the date fixed for the opening of bids. If any bidder fails to acknowledge the receipt of such addenda in the space provided in the bid form, his bid will nevertheless be construed as though the receipt of such addenda had been acknowledged.

**I.** The Town may consider more factors than just price in awarding a the contract in accordance with the requirements for competitive bidding under the Local Government Code Section 252.043. The criteria that will be considered are:

- the price;
- the offeror's experience and reputation;
- the quality of the offeror's goods or services;
- the impact on the ability of the Town to comply with rules relating to historically underutilized businesses;
- the offeror's safety record;
- the offeror's proposed personnel;
- whether the offeror's financial capability is appropriate to the size and scope of the project; and
- any other relevant factor specifically listed in the request for bids, proposals, or qualifications

**J. COMPLETION TIME:** The selected contractor shall use the time period between the awarding of the contract at Town Council and the date of Notice to Proceed to submit materials and shop drawings for approval by **Kimley-Horn and Associates**. **Kimley- Horn** shall review and return these submittals in the most expedient manner possible to accommodate immediate material ordering.

a. Upon receiving Notice to Proceed, the selected contractor shall have **330 calendar days** to construct the project and achieve substantial completion. Substantial completion for this project includes the following items:
    i. Preliminary Punchlist walk-through with the Town performed.
b. After substantial completion is reached, the contractor shall have **an additional 20 calendar days to** achieve 100% final completion. Final completion for this project shall include:
    i. Punchlist items completed and approved by the Town;
    ii. Site clean-up;
    iii. Submittal of Record Drawings; and
    iv. Execution of Maintenance Bond.

**K. PREPARATION OF BIDS:** Prices quoted shall include all items of cost, expense, taxes, fees and charges incurred by, or arising out of, the performance of the work to be performed under the Contract. Bids shall be submitted in duplicate and shall be signed in ink. Any bid on other than the required form will be considered informal and may be rejected. Erasures or other changes in a bid must be explained or noted over the initials of the bidder. Bids containing any conditions, omissions, unexplained erasures and alterations, or irregularities of any kind may be rejected as informal. The prices should be expressed in words and figures or they may be deemed informal and may be rejected. In case of discrepancy between the price written in the bid and that given in the figures, the price in writing will be considered as the bid. In the case of a discrepancy between a unit price and its extension, the unit price will govern. Failure to submit all requested information will make a bid irregular and subject to rejection. Bids shall be signed with name typed or printed below signature, and, if a partnership, give full name of all partners. Where bidder is a corporation, bids must be signed with the legal name of the corporation followed by the name of the state of incorporation and the legal signature of an officer authorized to bind the corporation to a contract.

**L. SUBMITTAL OF BIDS:** Sealed proposals will be received at the time, date and place stated in the Advertisement for Bids. Proposals shall be made on unaltered Proposal Forms furnished by the Town of Addison. Bidders shall submit proposals in an opaque, sealed envelope addressed to the Owner and plainly mark on the outside of the envelope the name and address of the bidder. The envelopes shall also be marked with the following project description:

**PUBLIC WORKS AND ENGINEERING SERVICES BID NUMBER 21-69**

**BELLA LANE SOUTH EXTENSTION & ALPHA ROAD CONNECTOR**

An electronic copy of the bid shall be included in the envelope when the paper copy bid is submitted. A USB drive is preferred.

The Bid Bond must be completed and signed by each bidder and submitted with the bid. Submit Bids by mail or in person prior to the time for receiving bids set forth in the Advertisement for Bids issued by the Town.

Electronic bidding on www.civcastusa.com will not be considered for this project. The Town of Addison uses www.civcastusa.com to distribute bids and proposals. There will be NO COST to the contractor for the use of www.civcastusa.com.

**M. MODIFICATION AND WITHDRAWAL OF BIDS:** Prior to the time set for bid opening, bids may be withdrawn or modified. Bids may be modified only on the official bid form and must be signed by a person legally empowered to bind the bidder. No bidder shall modify, withdraw, or cancel his bid or any part thereof for sixty (60) calendar days after the time agreed upon for the receipt of bids.

**N. DISQUALIFICATION:** The Owner reserves the right to disqualify proposals, before or after the opening, upon evidence of collusion with intent to defraud or other illegal practices relating to this proposal upon the part of the bidder.

**O. SUBMISSION OF POST-BID INFORMATION:** Upon notification of acceptance, the selected bidder shall, within twenty-four (24) hours, submit the following:

1. A designation of the portions of the Work proposed to be performed by the bidder with his own force.
2. A list of names of the Subcontractors or other persons or organizations, including those who are to furnish materials and equipment fabricated to a special design proposed for such portions of the Work as may be designated in the Bidding Documents or as may be requested by the Town of Addison. The bidder will be required to establish to the satisfaction of the Owner the reliability and responsibility of the proposed Subcontractors and suppliers to furnish and perform the Work.

3. Other information as required.

**P. AWARD:** The Owner reserves the right to accept any or to reject any bids without compensation to bidders and to waive irregularities and informalities. The Town of Addison Public Works & Engineering Services Department, in making its recommendation, will consider the following elements:

1. Whether the bidder is a contractor with experience in the type of work involved.
2. Whether the bidder has adequate plant, equipment and personnel to perform the work properly and expeditiously.
3. Whether the bidder has a suitable financial status and reputation for meeting obligations incident to work of the kind specified.
4. Whether the bidder has complied with the terms and conditions.

Alternate items may or may not be awarded. Addition or deletion of other items or schedules will be governed by the *Standard Specifications for Public Works Construction – North Central Texas, November 2017, 5th Edition*, (hereinafter called SSPWC) Item 104.2 "Change or Modification of Contract".

**Q. EXECUTION OF THE CONTRACT:** The successful bidder will be required to enter into a contract with the Owner within ten (10) days of notice by the Owner that his bid has been accepted. Failure to enter into a contract within the established time limit shall be considered grounds for forfeiture of the bid bond.

**R. CONSTRUCTION SCHEDULE:** It is the Owner's desire to have the project completed and operational in as short a time as possible. The number of calendar days for completion of the project will begin with the date specified in the Notice to Proceed. The Notice to Proceed will be issued in a manner to facilitate a smooth construction of the project. The Contractor shall begin construction within ten (10) calendar days of the issuance of the Notice to Proceed.

**S. COST PLUS TIME BIDDING:** N/A

**T. FORM OF CONTRACT:** The contract for the construction of the project will be drawn up by the Owner. A sample form of agreement is included in the Contract Agreement Section.

**U. BONDS:** A Performance Bond, a Labor and Material Payment Bond and a Maintenance Bond will be required by the Owner. The Performance Bond and Payment Bond shall name the Town of Addison, and others as directed by the Town, as joint obligees. Sample forms have

been included in the Performance Bond, Payment Bond, and Maintenance Bond sections. (Contractor shall confirm the legal names of obligees prior to execution of Bonds.)

**V. BID SECURITY:** Bids shall be accompanied by a bid bond in the same amount from a surety company licensed to do business in the State of Texas as a guarantee that the bidder will enter into a contract and execute a Performance Bond and Payment Bond within ten (10) calendar days after notice of award of contract to him. Such bid bonds will be returned to all except the three lowest bidders within three (3) days after the opening of bids, and the remaining bid bonds will be returned promptly after the Owner has made an award of contract, or, if no award has been made within thirty (30) calendar days after the date of the opening of bids, upon demand of the bidder at any time thereafter, so long as he has not been notified of the acceptance of his bid.

**W. RESOLUTIONS:** If the bidder is a corporation, a copy of the resolution empowering the person submitting the bid to bind the bidder must be included with the bid.

**X. CONSTRUCTION STAKING:** Construction staking and re-staking will not be provided by the Owner. Benchmarks and Horizontal Control are shown on the plans. There is no separate bid item for staking, therefore, the contractor must include value for staking in the various bid items as subsidiary to the contract. Any staking or re-staking that is required shall be the responsibility of the Contractor and shall be at no cost to the Owner.

**Y. FINAL PAYMENT:** The general provisions for Final Payment shall be as stated in Item 109.5.4 of the SSPWC including all Amendments and Additions. Prior to final payment the Contractor shall provide the Owner with the following items:

1. A Contractor's Affidavit of Bills Paid in accordance with Section BP.
2. A Consent of Surety Company to Final Payment.
3. A complete set of record plans which indicate all construction variations from the original construction documents in accordance with the Special Provisions.
4. A Two (2) years Maintenance Bond in accordance with Section MB.
5. Acknowledgement that the project has been reviewed and accepted by TDLR.

**Z. PREVAILING WAGE RATES:** Wage rates paid on this project shall not be less than specified in the schedule of general prevailing rates of per diem wages as attached in the Special Provisions.

**AA. PRIORITY OF CONTRACT DOCUMENTS:** Reference the Contract Agreement for information regarding the priority of Contract Documents.

| Item No. | Name of Pay Item with Unit Price in Words | Est. Quantity | Unit | Unit Bid Price | Amount Bid |
|---|---|---|---|---|---|
| **BASE BID - STREET IMPROVEMENTS** | | | | | |
| **P1** | MOBILIZATION (5% MAX) | 1 | LS | | |
| | Complete in Place, for the Sum of<br>_____ Dollars and<br>_____ Cents per unit | | | $ | $ |
| **P2** | BARRICADES, SIGNS, AND TRAFFIC HANDLING | 1 | LS | | |
| | Complete in Place, for the Sum of<br>_____ Dollars and<br>_____ Cents per unit | | | $ | $ |
| **P3** | PROJECT SIGN | 2 | EA | | |
| | Complete in Place, for the Sum of<br>_____ Dollars and<br>_____ Cents per unit | | | $ | $ |
| **P4** | GENERAL SITE PREPARATION | 1 | LS | | |
| | Complete in Place, for the Sum of<br>_____ Dollars and<br>_____ Cents per unit | | | $ | $ |
| **P5** | REMOVE EX HEADWALL | 1 | EA | | |
| | Complete in Place, for the Sum of<br>_____ Dollars and<br>_____ Cents per unit | | | $ | $ |
| **P6** | REMOVAL OF EX 54" RCP | 5 | LF | | |
| | Complete in Place, for the Sum of<br>_____ Dollars and<br>_____ Cents per unit | | | $ | $ |
| **P7** | REMOVE EXISTING CONCRETE SIDEWALK/RAMPS | 425 | SY | | |
| | Complete in Place, for the Sum of<br>_____ Dollars and<br>_____ Cents per unit | | | $ | $ |
| **P8** | REMOVE EXISTING ASPHALT PAVEMENT | 480 | SY | | |
| | Complete in Place, for the Sum of<br>_____ Dollars and<br>_____ Cents per unit | | | $ | $ |
| **P9** | REMOVE EXISTING TREES | 116 | EA | | |
| | Complete in Place, for the Sum of<br>_____ Dollars and<br>_____ Cents per unit | | | $ | $ |
| **P10** | UNCLASSIFIED STREET EXCAVATION | 1 | LS | | |
| | Complete in Place, for the Sum of<br>_____ Dollars and<br>_____ Cents per unit | | | $ | $ |
| **P11** | BORROW AND SPOIL (ROADWAY) | 1 | LS | | |
| | Complete in Place, for the Sum of<br>_____ Dollars and<br>_____ Cents per unit | | | $ | $ |
| **P12** | MOISTURE TREATED SUBGRADE | 7,180 | SY | | |
| | Complete in Place, for the Sum of<br>_____ Dollars and<br>_____ Cents per unit | | | $ | $ |

| Item No. | Name of Pay Item with Unit Price in Words | Est. Quantity | Unit | Unit Bid Price | Amount Bid |
|---|---|---|---|---|---|
| **P13** | 6" LIME STABILIZED SUBGRADE | 1,145 | SY | | |
| | Complete in Place, for the Sum of<br>_____ Dollars and<br>_____ Cents per unit | | | $ | $ |
| **P14** | HYDRATED LIME | 25 | TON | | |
| | Complete in Place, for the Sum of<br>_____ Dollars and<br>_____ Cents per unit | | | $ | $ |
| **P15** | 4" TYP B HMAC (TXDOT) | 30 | TON | | |
| | Complete in Place, for the Sum of<br>_____ Dollars and<br>_____ Cents per unit | | | $ | $ |
| **P16** | 8" REINFORCED CONCRETE PAVEMENT (STREET) | 6,615 | SY | | |
| | Complete in Place, for the Sum of<br>_____ Dollars and<br>_____ Cents per unit | | | $ | $ |
| **P17** | 10" PORTLAND CEMENT CONC PAVEMENT W/ 6" MONO CURB ) | 1,050 | SY | | |
| | Complete in Place, for the Sum of<br>_____ Dollars and<br>_____ Cents per unit | | | $ | $ |
| **P18** | 6" CURB AND GUTTER | 875 | LF | | |
| | Complete in Place, for the Sum of<br>_____ Dollars and<br>_____ Cents per unit | | | $ | $ |
| **P19** | REINFORCED CONCRETE STREET HEADERS | 540 | LF | | |
| | Complete in Place, for the Sum of<br>_____ Dollars and<br>_____ Cents per unit | | | $ | $ |
| **P20** | 5" CONCRETE SIDEWALK | 3,100 | SY | | |
| | Complete in Place, for the Sum of<br>_____ Dollars and<br>_____ Cents per unit | | | $ | $ |
| **P21** | ACESSIBLE RAMP | 12 | EA | | |
| | Complete in Place, for the Sum of<br>_____ Dollars and<br>_____ Cents per unit | | | $ | $ |
| **P22** | RAIL (HANDRAIL) (TY F) | 35 | LF | | |
| | Complete in Place, for the Sum of<br>_____ Dollars and<br>_____ Cents per unit | | | $ | $ |
| **P23** | INSTALL NEW SIGN AND SIGN POST ASSEMBLY | 20 | EA | | |
| | Complete in Place, for the Sum of<br>_____ Dollars and<br>_____ Cents per unit | | | $ | $ |
| **P24** | REFL PAV MRKG TY I & TY II (W) 4" SOLID | 3,300 | LF | | |
| | Complete in Place, for the Sum of<br>_____ Dollars and<br>_____ Cents per unit | | | $ | $ |

| Item No. | Name of Pay Item with Unit Price in Words | Est. Quantity | Unit | Unit Bid Price | Amount Bid |
|---|---|---|---|---|---|
| **P25** | REFL PAV MRKG TY I & TY II (Y) 4" SOLID | 3,050 | LF | | |
| | Complete in Place, for the Sum of<br>_____ Dollars and<br>_____ Cents per unit | | | $ | $ |
| **P26** | REFL PAV MRKG TY I & TY II (Y) 4" BROKEN | 140 | LF | | |
| | Complete in Place, for the Sum of<br>_____ Dollars and<br>_____ Cents per unit | | | $ | $ |
| **P27** | REFL PAV MRKG TY I & TY II (W) ARROW | 3 | EA | | |
| | Complete in Place, for the Sum of<br>_____ Dollars and<br>_____ Cents per unit | | | $ | $ |
| **P28** | REFL PAV MRKG TY I & TY II (W) 24" STOP BAR MARKING | 31 | LF | | |
| | Complete in Place, for the Sum of<br>_____ Dollars and<br>_____ Cents per unit | | | $ | $ |
| **P29** | REFL PAV MRKG TY I & TY II (W) 5' X 8' CROSSWALK WITH 5' SPACE | 3 | EA | | |
| | Complete in Place, for the Sum of<br>_____ Dollars and<br>_____ Cents per unit | | | $ | $ |
| **P30** | REFL PAV MRKG TY I & TY II (W) 24"X 8" CROSSWALK WITH 4' SPACE | 15 | EA | | |
| | Complete in Place, for the Sum of<br>_____ Dollars and<br>_____ Cents per unit | | | $ | $ |
| **P31** | REFL PAV MRKG TY I (W) 24" TRIANGLE | 21 | EA | | |
| | Complete in Place, for the Sum of<br>_____ Dollars and<br>_____ Cents per unit | | | $ | $ |
| **P32** | REMOVE AND RELOCATE EX GATE | 1 | EA | | |
| | Complete in Place, for the Sum of<br>_____ Dollars and<br>_____ Cents per unit | | | $ | $ |
| **P33** | ONCOR DUCT CROSSING COORDINATION | 1 | LS | | |
| | Complete in Place, for the Sum of<br>_____ Dollars and<br>_____ Cents per unit | | | $ | $ |

**TOTAL AMOUNT BID-BASE BID - STREET IMPROVEMENTS**

_____
(Total Amount Bid, Numerical Value)

_____ Dollars
and _____ Cents

***The Owner reserves the right to delete any bid items or portions thereof. If the Owner elects to delete any portions of the PROJECT from the contract, then the contract can be awarded on that basis.**

| Item No. | Name of Pay Item with Unit Price in Words | Est. Quantity | Unit | Unit Bid Price | Amount Bid |
|---|---|---|---|---|---|
| **BRIDGE OVER FARMERS BRANCH CREEK** | | | | | |
| **B1** | FLOWABLE BACKFILL | 443 | CY | | |
| | Complete in Place, for the Sum of<br>_____ Dollars and<br>_____ Cents per unit | | | $ | $ |
| **B2** | DRILL SHAFT (18 IN) | 148 | LF | | |
| | Complete in Place, for the Sum of<br>_____ Dollars and<br>_____ Cents per unit | | | $ | $ |
| **B3** | DRILL SHAFT (36 IN) | 296 | LF | | |
| | Complete in Place, for the Sum of<br>_____ Dollars and<br>_____ Cents per unit | | | $ | $ |
| **B4** | CL C CONC (ABUT) (HPC) | 100 | CY | | |
| | Complete in Place, for the Sum of<br>_____ Dollars and<br>_____ Cents per unit | | | $ | $ |
| **B5** | REINF CONC SLAB (HPC) | 2,648 | SF | | |
| | Complete in Place, for the Sum of<br>_____ Dollars and<br>_____ Cents per unit | | | $ | $ |
| **B6** | BRIDGE SIDEWALK (HPC) | 490 | SF | | |
| | Complete in Place, for the Sum of<br>_____ Dollars and<br>_____ Cents per unit | | | $ | $ |
| **B7** | APPROACH SLAB (HPC) | 83 | CY | | |
| | Complete in Place, for the Sum of<br>_____ Dollars and<br>_____ Cents per unit | | | $ | $ |
| **B8** | PRESTR CONC I-GIRDER (TX40) | 329 | LF | | |
| | Complete in Place, for the Sum of<br>_____ Dollars and<br>_____ Cents per unit | | | $ | $ |
| **B9** | RIPRAP (CONC) (CL B) (RR8&RR9) | 76 | CY | | |
| | Complete in Place, for the Sum of<br>_____ Dollars and<br>_____ Cents per unit | | | $ | $ |
| **B10** | RIPRAP (STONE PROTECTION) (24 IN) | 1,470 | CY | | |
| | Complete in Place, for the Sum of<br>_____ Dollars and<br>_____ Cents per unit | | | $ | $ |
| **B11** | ELASTOMERIC BEARING (LAMINATED) | 8 | EA | | |
| | Complete in Place, for the Sum of<br>_____ Dollars and<br>_____ Cents per unit | | | $ | $ |
| **B12** | STR STEEL (MISCELLANEOUS BRIDGE) (BS-EJCP) | 186 | LB | | |
| | Complete in Place, for the Sum of<br>_____ Dollars and<br>_____ Cents per unit | | | $ | $ |

| Item No. | Name of Pay Item with Unit Price in Words | Est. Quantity | Unit | Unit Bid Price | Amount Bid |
|---|---|---|---|---|---|
| **B13** | RAIL (TY C221) (HPC) | 238 | LF | | |
| | Complete in Place, for the Sum of<br>_____ Dollars and<br>_____ Cents per unit | | | $ | $ |
| **B14** | SEALED EXPANSION JOINT (4 IN) (SEJ - M) | 51 | LF | | |
| | Complete in Place, for the Sum of<br>_____ Dollars and<br>_____ Cents per unit | | | $ | $ |
| **B15** | MTL BEAM GD FEN TRANS (THRIE-BEAM) | 3 | EA | | |
| | Complete in Place, for the Sum of<br>_____ Dollars and<br>_____ Cents per unit | | | $ | $ |
| **B16** | TERMINAL ANCHOR SECTION | 3 | EA | | |
| | Complete in Place, for the Sum of<br>_____ Dollars and<br>_____ Cents per unit | | | $ | $ |

**TOTAL AMOUNT BID-BRIDGE OVER FARMERS BRANCH CREEK**

_____
(Total Amount Bid, Numerical Value)

_____ Dollars
and _____ Cents

***The Owner reserves the right to delete any bid items or portions thereof. If the Owner elects to delete any portions of the PROJECT from the contract, then the contract can be awarded on that basis.**

| Item No. | Name of Pay Item with Unit Price in Words | Est. Quantity | Unit | Unit Bid Price | Amount Bid |
|---|---|---|---|---|---|
| **BASE BID - STORM SYSTEM IMPROVEMENTS** | | | | | |
| **D1** | 18" RCP CLASS III | 490 | LF | | |
| | Complete in Place, for the Sum of<br>_____ Dollars and<br>_____ Cents per unit | | | $ | $ |
| **D2** | 24" RCP CLASS III | 285 | LF | | |
| | Complete in Place, for the Sum of<br>_____ Dollars and<br>_____ Cents per unit | | | $ | $ |
| **D3** | 30" RCP CLASS III | 80 | LF | | |
| | Complete in Place, for the Sum of<br>_____ Dollars and<br>_____ Cents per unit | | | $ | $ |
| **D4** | 6' CURB INLET | 4 | EA | | |
| | Complete in Place, for the Sum of<br>_____ Dollars and<br>_____ Cents per unit | | | $ | $ |
| **D5** | CONCRETE HEADWALL (CHFW-0) | 3 | EA | | |
| | Complete in Place, for the Sum of<br>_____ Dollars and<br>_____ Cents per unit | | | $ | $ |
| **D6** | 18" RCP 2:1 SET TY II HEADWALL | 1 | EA | | |
| | Complete in Place, for the Sum of<br>_____ Dollars and<br>_____ Cents per unit | | | $ | $ |
| **D7** | 18" RCP 6:1 SET TY II HEADWALL | 4 | EA | | |
| | Complete in Place, for the Sum of<br>_____ Dollars and<br>_____ Cents per unit | | | $ | $ |
| **D8** | 24" RCP 6:1 SET TY II HEADWALL | 4 | EA | | |
| | Complete in Place, for the Sum of<br>_____ Dollars and<br>_____ Cents per unit | | | $ | $ |
| **D9** | RIPRAP (STONE PROTECTION) (12 IN) (CHFW-0 HEADWALL) | 12 | CY | | |
| | Complete in Place, for the Sum of<br>_____ Dollars and<br>_____ Cents per unit | | | $ | $ |
| **D10** | TRENCH EXCAVATION PROTECTION (STORM SYSTEM) | 855 | LF | | |
| | Complete in Place, for the Sum of<br>_____ Dollars and<br>_____ Cents per unit | | | $ | $ |

**TOTAL AMOUNT BID-BASE BID - STORM SYSTEM IMPROVEMENTS**

$ -

(Total Amount Bid, Numerical Value)

_____ Dollars

and _____ Cents

***The Owner reserves the right to delete any bid items or portions thereof. If the Owner elects to delete any portions of the PROJECT from the contract, then the contract can be awarded on that basis.**

| Item No. | Name of Pay Item with Unit Price in Words | Est. Quantity | Unit | Unit Bid Price | Amount Bid |
|---|---|---|---|---|---|
| **BASE BID - DETENTION POND IMPROVEMENTS** | | | | | |
| **H1** | UNCLASSIFIED POND AND CREEK EXCAVATION | 1 | LS | | |
| | Complete in Place, for the Sum of<br>_____ Dollars and<br>_____ Cents per unit | | | $ | $ |
| **H2** | BORROW AND SPOIL (DETENTION POND AND CREEK) | 1 | LS | | |
| | Complete in Place, for the Sum of<br>_____ Dollars and<br>_____ Cents per unit | | | $ | $ |
| **H3** | BORROW AND SPOIL (DETENTION POND AND CREEK) (SELECT FILL) | 1 | LS | | |
| | Complete in Place, for the Sum of<br>_____ Dollars and<br>_____ Cents per unit | | | $ | $ |
| **H4** | RIPRAP (CONC) (CL B) (RR8&RR9) (DETENTION POND) | 7 | CY | | |
| | Complete in Place, for the Sum of<br>_____ Dollars and<br>_____ Cents per unit | | | $ | $ |
| **H5** | RIPRAP (STONE PROTECTION) (24 IN) (DETENTION POND) | 910 | CY | | |
| | Complete in Place, for the Sum of<br>_____ Dollars and<br>_____ Cents per unit | | | $ | $ |
| **H6** | CONCRETE OUTFALL STUCTURE | 7 | CY | | |
| | Complete in Place, for the Sum of<br>_____ Dollars and<br>_____ Cents per unit | | | $ | $ |

**TOTAL AMOUNT BID-BASE BID - DETENTION POND IMPROVEMENTS**

$ _____ -

(Total Amount Bid, Numerical Value)

_____ Dollars

and _____ Cents

***The Owner reserves the right to delete any bid items or portions thereof. If the Owner elects to delete any portions of the PROJECT from the contract, then the contract can be awarded on that basis.**

| Item No. | Name of Pay Item with Unit Price in Words | Est. Quantity | Unit | Unit Bid Price | Amount Bid |
|---|---|---|---|---|---|
| **BASE BID - LANDSCAPE IMPROVEMENTS AND EROSION CONTROL** | | | | | |
| **L1** | HYDRAULIC MULCHING WITH 4" TOPSOIL | 43,868 | SY | | |
| | Complete in Place, for the Sum of<br>_____ Dollars and<br>_____ Cents per unit | | | $ | $ |
| **L2** | SEDIMENT CONTROL FENCE (INSTALL/MAINTAIN/REMOVE) | 7,475 | LF | | |
| | Complete in Place, for the Sum of<br>_____ Dollars and<br>_____ Cents per unit | | | $ | $ |
| **L3** | STABILIZED CONSTRUCTION EXIT/ENTRANCE | 180 | SY | | |
| | Complete in Place, for the Sum of<br>_____ Dollars and<br>_____ Cents per unit | | | $ | $ |
| **L4** | INLET PROTECTION (INSTALL/MAINTAIN/REMOVE) | 4 | EA | | |
| | Complete in Place, for the Sum of<br>_____ Dollars and<br>_____ Cents per unit | | | $ | $ |
| **L5** | ROCK CHECK DAM | 65 | LF | | |
| | Complete in Place, for the Sum of<br>_____ Dollars and<br>_____ Cents per unit | | | $ | $ |
| **L6** | STORM WATER POLLUTION PREVENTION PLAN | 1 | LS | | |
| | Complete in Place, for the Sum of<br>_____ Dollars and<br>_____ Cents per unit | | | $ | $ |

**TOTAL AMOUNT BID-TOTAL AMOUNT BID-BASE BID - DETENTION POND IMPROVEMENTS**

$ -

(Total Amount Bid, Numerical Value)

_____ Dollars

and _____ Cents

***The Owner reserves the right to delete any bid items or portions thereof. If the Owner elects to delete any portions of the PROJECT from the contract, then the contract can be awarded on that basis.**

| Item No. | Name of Pay Item with Unit Price in Words | Est. Quantity | Unit | Unit Bid Price | Amount Bid |
|---|---|---|---|---|---|
| **BASE BID - WATER IMPROVEMENTS** | | | | | |
| **W1** | 8" PVC WATER LINE | 355 | LF | | |
| | Complete in Place, for the Sum of<br>_____ Dollars and<br>_____ Cents per unit | | | $ | $ |
| **W2** | 12" PVC WATER LINE | 575 | LF | | |
| | Complete in Place, for the Sum of<br>_____ Dollars and<br>_____ Cents per unit | | | $ | $ |
| **W3** | 8 " GATE VALVE | 2 | EA | | |
| | Complete in Place, for the Sum of<br>_____ Dollars and<br>_____ Cents per unit | | | $ | $ |
| **W4** | 12" GATE VALVE | 2 | EA | | |
| | Complete in Place, for the Sum of<br>_____ Dollars and<br>_____ Cents per unit | | | $ | $ |
| **W5** | FIRE HYDRANT ASSEMBLY | 1 | EA | | |
| | Complete in Place, for the Sum of<br>_____ Dollars and<br>_____ Cents per unit | | | $ | $ |
| **W6** | REMOVE EXISTING 12" AC WATER LINE | 8 | LF | | |
| | Complete in Place, for the Sum of<br>_____ Dollars and<br>_____ Cents per unit | | | $ | $ |
| **W7** | ABANDON EXISTING ASBESTOS PIPE IN PLACE | 500 | LF | | |
| | Complete in Place, for the Sum of<br>_____ Dollars and<br>_____ Cents per unit | | | $ | $ |
| **W8** | WATER TESTING | 1 | LS | | |
| | Complete in Place, for the Sum of<br>_____ Dollars and<br>_____ Cents per unit | | | $ | $ |
| **W9** | TRENCH EXCAVATION PROTECTION (WATER SYSTEM) | 930 | LF | | |
| | Complete in Place, for the Sum of<br>_____ Dollars and<br>_____ Cents per unit | | | $ | $ |

**TOTAL AMOUNT BID-BASE BID - WATER IMPROVEMENTS** $ -

(Total Amount Bid, Numerical Value)

_____ Dollars

and _____ Cents

***The Owner reserves the right to delete any bid items or portions thereof. If the Owner elects to delete any portions of the PROJECT from the contract, then the contract can be awarded on that basis.**

| Item No. | Name of Pay Item with Unit Price in Words | Est. Quantity | Unit | Unit Bid Price | Amount Bid |
|---|---|---|---|---|---|
| **BASE BID - SANITARY SEWER IMPROVEMENTS** | | | | | |
| **SS1** | 8" PVC SSWR LINE | 315 | LF | | |
| | Complete in Place, for the Sum of<br>_____ Dollars and<br>_____ Cents per unit | | | $ | $ |
| **SS2** | 4' STANDARD MANHOLE | 1 | EA | | |
| | Complete in Place, for the Sum of<br>_____ Dollars and<br>_____ Cents per unit | | | $ | $ |
| **SS3** | CEMENT STABILIZED SAND ENCASEMENT (MIN. 10% CEMENT/CY) | 20 | LF | | |
| | Complete in Place, for the Sum of<br>_____ Dollars and<br>_____ Cents per unit | | | $ | $ |
| **SS4** | SANITARY SEWER CCTV INSPECTION | 1 | LS | | |
| | Complete in Place, for the Sum of<br>_____ Dollars and<br>_____ Cents per unit | | | $ | $ |
| **SS5** | TRENCH EXCAVATION PROTECTION (SANITARY SEWER IMPROVEMENTS) | 315 | LF | | |
| | Complete in Place, for the Sum of<br>_____ Dollars and<br>_____ Cents per unit | | | $ | $ |

**TOTAL AMOUNT BID-BASE BID - SANITARY SEWER IMPROVEMENTS**

$ _____ -

(Total Amount Bid, Numerical Value)

_____ Dollars

and _____ Cents

***The Owner reserves the right to delete any bid items or portions thereof. If the Owner elects to delete any portions of the PROJECT from the contract, then the contract can be awarded on that basis.**

| Item No. | Name of Pay Item with Unit Price in Words | Est. Quantity | Unit | Unit Bid Price | Amount Bid |
|---|---|---|---|---|---|
| **BASE BID - OWNER'S CONTIGENCY** | | | | | |
| **O1** | OWNER'S CONTIGENCY | 1 | LS | | |
| | Complete in Place, for the Sum of<br>Eighty Five Thousand Dollars and<br>Zero Cents per unit | | | $ 85,000.00 | $ 85,000.00 |

**TOTAL AMOUNT BID-BASE BID - OWNER'S CONTIGENCY**

$ 85,000.00

(Total Amount Bid, Numerical Value)

Dollars

and Cents

***The Owner reserves the right to delete any bid items or portions thereof. If the Owner elects to delete any portions of the PROJECT from the contract, then the contract can be awarded on that basis.**

**TOTAL AMOUNT OF BASE BID (ITEMS P1 THROUGH O1)**

$ _____ -

(Total Amount Bid, Numerical Value)

_____ Dollars

and _____ Cents

(Total Amount Bid in Words)

***The Owner reserves the right to delete any bid items or portions thereof. If the Owner elects to delete any portions of the PROJECT from the contract, then the contract can be awarded on that basis.**

NOTES:

1. All items, labor, materials, equipment, facilities, incidentals and work required for construction of the project are to be provided and installed by the Contractor as part of the project and payment for the cost of such shall be included in the price bid for the construction of the project.

2. Prices must be shown in words and figures for each item listed in the Proposal. In the event of discrepancy, the words shall control.

3. Materials, which are "tax exempt", are those items which are physically incorporated into the facilities constructed for the Town of Addison, as set forth in the Special Provisions. Materials include, but are not limited to purchased items such as water pipe, sanitary sewer pipe, storm drain pipe, etc.

   Services, which are "not tax exempt", are those items which are used by the Contractor but are not physically incorporated into the Town of Addison's facility and/or items which are consumed by construction, as set forth in the Special Provisions. Services include, but are not limited to, items such as supplies, tools, skill and labor, the purchase, rental or lease of equipment, etc.

_____

Name of Person Signing Bid

_____

Signature of Person Signing Bid

_____

Address

_____

Telephone No. Fax No.

_____

T.I.N. (Tax Identification or Employer's Number)

If BIDDER is:

**AN INDIVIDUAL**

By _____ (Seal)
(Individual's Name)

doing business as _____

Business address: _____

_____

_____

Phone No. _____

---

**A PARTNERSHIP**

By _____ (Seal)
(Firm Name)

_____
(General Partner)

doing business as _____

Business address: _____

_____

_____

Phone No. _____

**A CORPORATION**

By _____
(Corporation Name)

_____
(State of Incorporation)

By _____
(Name of Person Authorized to Sign)

_____
(Title)

(Corporate Seal)

Attest _____
(Secretary)

Business address: _____

_____

_____

Phone No. _____

---

**A JOINT VENTURE**

By _____
(Name)

_____
(Address)

By _____
(Name)

_____
(Address)

(Each joint venture must sign. The manner of signing for each individual, partnership and corporation that is a party to the joint venture should be in the manner indicated above.)

**SECTION PF-1**

# PROPOSAL FORM

# PROPOSAL FORM

_____ , 2021

TO: The Honorable Mayor and Town Council
Town of Addison, Texas

Gentlemen:

The undersigned bidder, having examined the plans, specifications and contract documents, and the location of the proposed work, and being fully advised as to the extent and character of the work, proposes to furnish all equipment and to perform labor and work necessary for completion of the work described by and in accordance with the Plans, Specifications and Contract for the following prices, to wit:

Signed by: _____

ACKNOWLEDGMENT OF ADDENDA:

The Bidder acknowledges receipt of the following addenda:

Addendum No. 1 _____

Addendum No. 2 _____

Addendum No. 3 _____

The following pages contain all bid items for:

BID SCHEDULE – BELLA LANE SOUTH EXTENSION & ALPHA ROAD CONNECTOR
BID NUMBER 21-69

**TOTAL AMOUNT OF BASE BID (ITEMS P1 THROUGH O1)**

$ _____ -

(Total Amount Bid, Numerical Value)

_____ Dollars

and _____ Cents

(Total Amount Bid in Words)

***The Owner reserves the right to delete any bid items or portions thereof. If the Owner elects to delete any portions of the PROJECT from the contract, then the contract can be awarded on that basis.**

NOTES:

1. All items, labor, materials, equipment, facilities, incidentals and work required for construction of the project are to be provided and installed by the Contractor as part of the project and payment for the cost of such shall be included in the price bid for the construction of the project.

2. Prices must be shown in words and figures for each item listed in the Proposal. In the event of discrepancy, the words shall control.

3. Materials, which are "tax exempt", are those items which are physically incorporated into the facilities constructed for the Town of Addison, as set forth in the Special Provisions. Materials include, but are not limited to purchased items such as water pipe, sanitary sewer pipe, storm drain pipe, etc.

   Services, which are "not tax exempt", are those items which are used by the Contractor but are not physically incorporated into the Town of Addison's facility and/or items which are consumed by construction, as set forth in the Special Provisions. Services include, but are not limited to, items such as supplies, tools, skill and labor, the purchase, rental or lease of equipment, etc.

_____

Name of Person Signing Bid

_____

Signature of Person Signing Bid

_____

Address

_____

Telephone No. Fax No.

_____

T.I.N. (Tax Identification or Employer's Number)

If BIDDER is:

**AN INDIVIDUAL**

By _____ (Seal)
(Individual's Name)

doing business as _____

Business address: _____

_____

_____

Phone No. _____

---

**A PARTNERSHIP**

By _____ (Seal)
(Firm Name)

_____
(General Partner)

doing business as _____

Business address: _____

_____

_____

Phone No. _____

**A CORPORATION**

By _____
(Corporation Name)

_____
(State of Incorporation)

By _____
(Name of Person Authorized to Sign)

_____
(Title)

(Corporate Seal)

Attest _____
(Secretary)

Business address: _____

_____

_____

Phone No. _____

---

**A JOINT VENTURE**

By _____
(Name)

_____
(Address)

By _____
(Name)

_____
(Address)

(Each joint venture must sign. The manner of signing for each individual, partnership and corporation that is a party to the joint venture should be in the manner indicated above.)

**SECTION PF-1**

# PROPOSAL FORM

# PROPOSAL FORM

_____ , 2021

TO: The Honorable Mayor and Town Council
Town of Addison, Texas

Gentlemen:

The undersigned bidder, having examined the plans, specifications and contract documents, and the location of the proposed work, and being fully advised as to the extent and character of the work, proposes to furnish all equipment and to perform labor and work necessary for completion of the work described by and in accordance with the Plans, Specifications and Contract for the following prices, to wit:

Signed by: _____

ACKNOWLEDGMENT OF ADDENDA:

The Bidder acknowledges receipt of the following addenda:

Addendum No. 1 _____

Addendum No. 2 _____

Addendum No. 3 _____

The following pages contain all bid items for:

BID SCHEDULE – BELLA LANE SOUTH EXTENSION & ALPHA ROAD CONNECTOR
BID NUMBER 21-69

**SECTION BB**

# BID BOND

## BID BOND

Bidder shall submit a bid bond equal to five percent (5%) of the bid price. Failure to submit a bid bond when required may deem the bid non-responsive. Bid Bonds may be submitted electronically with the executed original provided immediately upon request.

**SECTION BQS**

# BIDDER QUALIFICATION STATEMENT

## SECTION BQS

**ALL BIDDERS ARE NOTIFIED THAT THE FOLLOWING QUALIFICATION STATEMENT MUST BE COMPLETED AND SUBMITTED WITH THE BID PROPOSAL**

## CONTRACTOR'S QUALIFICATIONS

The Contractor shall show that he has experience with similar projects that require working on concrete pavement, water, storm sewer, detention pond, and bridge construction in close proximity to many physical features (such as: fences, carports, utility poles, guy lines, gas lines and meters, water lines, sewer manholes and cleanouts, etc.) which will require the Contractor to plan his work efforts and equipment needs with these limitations in mind. The Contractor shall submit a complete list of ALL Municipal and Similar Non-Municipal current and completed projects for the past three (3) years for review. This list shall include the names of supervisors and type of equipment used to perform this work.

**BIDDERS QUALIFICATION STATEMENT**

**INFRASTRUCTURE AND DEVELOPMENT SERVICES BID NUMBER 21-69, BELLA LANE SOUTH EXTENSION & ALPHA ROAD CONNECTOR**

Contractor:_____

Indicate One: _____Sole Proprietor _____Partnership _____Other

_____Corporation _____ Joint Venture

Name:_____Partner:_____

Title:_____Title:_____

Address:_____ Address:_____

City:_____ City:_____

State & Zip:_____ State & Zip:_____

Phone:_____ ___Phone:_____

State and Date of Incorporation, Partnership, Ownership, Etc._____

Location of Principal Office:_____

Contact and Phone at Principal Office:_____

Liability Insurance Provider and Limits of Coverage:_____

Workers Compensation Insurance Provider:_____

Surety (Performance and Payment):_____

Address:_____

Contact and Phone:_____

Superintendent and Backup Superintendent: (Work Resume - attach additional sheets.) (Safety Record – attached additional sheets; if needed show all verified safety violations.) The superintendent shall be able to communicate in English and not operate any equipment and have not had any verified job safety violations in the past five years. Any variations shall be reviewed by the OWNER for approval or denial. A job site shall be shut down if proper supervision is not provided.

Superintendent Name Backup Superintendent Name

_____ _____

Safety Record – List ALL Verified Violations for Superintendent and Backup Superintendent with explanation, date and action taken to correct future safety violations:

Superintendent

_____

_____

_____

_____

Backup Superintendent

_____

_____

_____

_____

Total Number of Employees to be Associated with this Job:_____

Managerial_____ Administrative_____ Professional_____

Skilled_____ Semi-Skilled_____ Other_____

Percentage of work to be done by Bidder's Employees (Based on Dollars Bid): _____

Type(s) of work to be done by Bidder's Employees (examples: concrete paving, structural concrete, waterlines, sanitary sewer lines, storm pipe, storm inlets, excavation, lime, bridge fencing, etc.)

_____

_____

_____

Access to Tools and Equipment: Percent Owned____ Percent Rented____

Number of Years in Business as a Contractor on Above Types of Works:_____

Type(s) of Work to be done by Sub-Contractors
Include Name, Address, and Phone Number of Sub-Contractor.
Use additional sheets if needed.

Type of Work Sub-Contractor

_____

_____

_____

_____

_____

List Equipment to be used on this project (Make/Model/Age of Major Equipment) Any Equipment not listed shall be reviewed by the OWNER for approval or rejection prior to use of Equipment on this project. (Use additional sheets if necessary)

Type of Equipment Make Model Age (years)

_____

_____

_____

_____

_____

_____

_____

List of ALL Municipal and Similar Non-Municipal current and completed projects for the past three (3) years. (Use additional sheets if necessary.)

1. Project:_____

   Current Status:_____

   Any Litigation Issues: Yes or No (Circle One) If Yes, explain:_____

   _____

   _____

   _____

   Any Verified Safety Violations: Yes or No (Circle One) If Yes, explain:_____

   _____

   _____

   _____

   Project Description:_____

   Owner/Agency:_____

   Year Built:_____ Contract Price:_____

   Contact Person:_____ Phone:_____

2. Project:_____

   Current Status:_____

   Any Litigation Issues: Yes or No (Circle One) If Yes, explain:_____

   _____

   _____

   _____

   Any Verified Safety Violations: Yes or No (Circle One) If Yes, explain:_____

   _____

   _____

_____

Project Description:_____

Owner/Agency:_____

Year Built:_____ Contract Price:_____

Contact Person:_____ Phone:_____

3. Project:_____

Current Status:_____

Any Litigation Issues: Yes or No (Circle One) If Yes, explain:_____

_____

_____

_____

Any Verified Safety Violations: Yes or No (Circle One) If Yes, explain:_____

_____

_____

_____

Project Description:_____

Owner/Agency:_____

Year Built:_____ Contract Price:_____

Contact Person:_____ Phone:_____

4. Project:_____

Current Status:_____

Any Litigation Issues: Yes or No (Circle One) If Yes, explain:_____

_____

_____

_____

Any Verified Safety Violations: Yes or No (Circle One) If Yes, explain:_____

_____

_____

_____

Project Description:_____

Owner/Agency:_____

Year Built:_____ Contract Price:_____

Contact Person:_____ Phone:_____

5. Project:_____

Current Status:_____

Any Litigation Issues: Yes or No (Circle One) If Yes, explain:_____

_____

_____

_____

Any Verified Safety Violations: Yes or No (Circle One) If Yes, explain:_____

_____

_____

_____

Project Description:_____

Owner/Agency:_____

Year Built:_____ Contract Price:_____

Contact Person:_____ Phone:_____

6. Project:_____

Current Status:_____

Any Litigation Issues: Yes or No (Circle One) If Yes, explain:_____

_____

_____

_____

Any Verified Safety Violations: Yes or No (Circle One) If Yes, explain:_____

_____

_____

_____

Project Description:_____

Owner/Agency:_____

Year Built:_____ Contract Price:_____

Contact Person:_____ Phone:_____

7. Project:_____

Current Status:_____

Any Litigation Issues: Yes or No (Circle One) If Yes, explain:_____

_____

_____

_____

Any Verified Safety Violations: Yes or No (Circle One) If Yes, explain:_____

_____

_____

_____

Project Description:_____

Owner/Agency:_____

Year Built:_____ Contract Price:_____

Contact Person:_____ Phone:_____

8. Project:_____

Current Status:_____

Any Litigation Issues: Yes or No (Circle One) If Yes, explain:_____

_____

_____

_____

Any Verified Safety Violations: Yes or No (Circle One) If Yes, explain:_____

_____

_____

_____

Project Description:_____

Owner/Agency:_____

Year Built:_____ Contract Price:_____

Contact Person:_____ Phone:_____

9. Project:_____

Current Status:_____

Any Litigation Issues: Yes or No (Circle One) If Yes, explain:_____

_____

_____

_____

Any Verified Safety Violations: Yes or No (Circle One) If Yes, explain:_____

_____

_____

_____

Project Description:_____

Owner/Agency:_____

Year Built:_____ Contract Price:_____

Contact Person:_____ Phone:_____

10. Project:_____

Current Status:_____

Any Litigation Issues: Yes or No (Circle One) If Yes, explain:_____

_____

_____

_____

Any Verified Safety Violations: Yes or No (Circle One) If Yes, explain:_____

_____

_____

_____

Project Description:_____

Owner/Agency:_____

Year Built:_____ Contract Price:_____

Contact Person:_____ Phone:_____

Trade references (List Company, Address, Contact Person, and Phone):

_____

_____

_____

Bank References (List Institution, Address, Contact Person, and Phone)

_____

_____

_____

Claims and Suits (if the answer to any of the following questions is yes, please attached details):

1. Has your organization ever failed to complete any work awarded to it?_____

2. Are there any judgments, claims, arbitration proceedings, or suits pending or outstanding against your organization or officers?_____

3. Has your organization filed any lawsuits or requested arbitration with regard to construction contracts within the last five years?_____

4. Within the last five (5) years, has any officer or principal of your organization ever been an officer or principal of another organization when it failed to complete a construction contract?_____

I,_____,being duly sworn deposes and says that the information provided herein is true and sufficiently complete so as not to be misleading.

Date this_____day of_____, 20_____.
Name of
Organization:_____

By:_____

Title:_____

**STATE OF TEXAS**

**COUNTY OF DALLAS**

**BEFORE ME** the undersigned authority, on this day personally appeared _____

_____, known to me to be the person whose name subscribed to the foregoing instrument, and acknowledged to me that he executed the same for the purposes and considerations therein expressed.

**GIVEN UNDER MY HAND AND SEAL OF OFFICE** this ___day of _____ 20____.

_____

Notary Public in and for _____ County, Texas

**SECTION CA**

# CONTRACT AGREEMENT

# CONTRACT AGREEMENT

STATE OF TEXAS

COUNTY OF DALLAS

THIS AGREEMENT is made and entered into this _____ day of _____, 2021, by and between the Town of Addison, of the County of Dallas and State of Texas, acting through its City Manager, thereunto duly authorized so to do, Party of the First Part, hereinafter termed the OWNER, and _____, of the City of _____, County of _____, State of _____, Party of the Second Part, hereinafter termed CONTRACTOR.

WITNESSETH: That for and in consideration of the payment and agreement hereinafter mentioned, to be made and performed by the OWNER, the said CONTRACTOR hereby agrees with the said OWNER to commence and complete construction of certain improvements as follows:

**BELLA LANE SOUTH EXTENSION & ALPHA ROAD CONNECTOR**

**PUBLIC WORKS AND ENGINEERING SERVICES BID NUMBER 21-69**

and all extra work in connection therewith, under the terms as stated in the General and Specific Conditions of the AGREEMENT; and at his own proper cost and expense to furnish all the materials, supplies, machinery, equipment, tools, superintendence, labor, insurance and other accessories and services necessary to complete the said construction, in accordance with the conditions and prices stated in the Proposal attached hereto and in accordance with the ~~Advertisement for Bids, Instructions to Bidders, General Provisions, Special Provisions, Plans, and other drawings and printed or written explanatory matter thereof, and the Technical Specifications and Addenda thereto~~ Contract Documents~~, as prepared by the OWNER, each of which has been identified by the endorsement of the CONTRACTOR and the OWNER thereon, together with the CONTRACTOR's written Proposal and the General Provisions, all of which are made a part hereof and collectively evidence and constitute the entire AGREEMENT.~~.

The Contract Documents shall consist of the following documents:

1. this Contract Agreement;
2. properly authorized change orders;
3. any listed and numbered addenda;
4. the Special Provisions;
5. Technical Specifications & Construction Drawings;
6. the OWNER's Standard Construction Details;
7. the October 2017 5th Edition of the Public Works Construction Standards - North Central Texas as amended and published by the North Central Texas Council of Governments, as amended by the Owner (collectively, the "NCTCOG Specifications ");
8. the OWNER's written notice to proceed to the CONTRACTOR;

9. the Contractor's Bid Proposal;
10. the Performance, Payment, and Maintenance Bonds; and,
11. any other bid materials distributed by the Owner that relate to the Project.

These Contract Documents are incorporated by reference into this Construction Agreement as if set out here in their entirety. The Contract Documents are intended to be complementary; what is called for by one document shall be as binding as if called for by all Contract Documents. It is specifically provided, however, that in the event of any inconsistency in the Contract Documents, the inconsistency shall be resolved by giving precedence to the Contract Documents in the order in which they are listed herein above. If, however, there exists a conflict or inconsistency between the Technical Specifications and the Construction Drawings it shall be the Contractor's obligation to seek clarification as to which requirements or provisions control before undertaking any work on that component of the project. Should the Contractor fail or refuse to seek a clarification of such conflicting or inconsistent requirements or provisions prior to any work on that component of the project, the Contractor shall be solely responsible for the costs and expenses - including additional time - necessary to cure, repair and/or correct that component of the project.

The CONTRACTOR hereby agrees to commence work within ten (10) calendar days after the date of written notice to do so shall have been given to him, to complete the work within three hundred and thirty **(**330) calendar days, after he commences work, subject to such extensions of time as are provided by the General Provisions.

The OWNER agrees to pay the CONTRACTOR _____ _____ Dollars **($_____)** in current funds for the performance of the Contract in accordance with the Proposal submitted thereof, subject to additions and deductions, as provided in the General Provisions, and to make payments of account thereof as provided therein.

IN WITNESS WHEREOF, the parties of these presents have executed this AGREEMENT in the year and day first above written.

**TOWN OF ADDISON, TEXAS (OWNER)** **ATTEST:**

By: _____ By: _____
City Manager

(CONTRACTOR) ATTEST:

By: _____ By: _____

The following to be executed if the CONTRACTOR is a corporation:

I, _____ certify that I am the secretary of the corporation named as CONTRACTOR herein; that _____, who signed this Contract on behalf of the CONTRACTOR is the _____ (official title) of said corporation; that said Contract was duly signed for and in behalf of said corporation by authority of its governing body, and is within the scope of its corporate powers.

Signed: _____

Corporate Seal

**SECTION PrB**

# PERFORMANCE BOND

**PERFORMANCE BOND**

STATE OF TEXAS }
COUNTY OF DALLAS }

WHEREAS, _____as principal ("Contractor") and _____, a corporation organized under the laws of _____ and being duly authorized to do business in the State of Texas, as surety ("Surety")(whether one or more), do hereby expressly acknowledge themselves to he held and bound to pay to the Town of Addison, Texas, a home-rule municipality organized and operating under the Constitution and laws of the State of Texas (the "Town"), its successors and assigns, and to all persons, firms, subcontractors and corporations who may furnish materials or labor under the contract as more fully described below, the sum of _____ Dollars in the lawful currency of the United States of America ($ ) for the payment of which Contractor and Surety are liable to the Town, jointly and severally; and

WHEREAS, Contractor has this day entered into a written contract with the Town to build and construct _____
_____
_____
which contract and the plans and specifications therein mentioned (collectively referred to hereinafter as the "Contract") are hereby expressly incorporated into and made a part hereof as though set forth at length; and

WHEREAS, this bond is given pursuant to Chapter 2253 of the Texas Government Code;

NOW, THEREFORE, if Contractor shall well, truly and faithfully perform all of the undertakings, duties, terms, conditions and agreements of the Contract; shall satisfy all claims and demands incurred under the Contract; shall fully indemnify and hold the Town harmless; shall reimburse and repay the Town for any outlay or expense which the Town may incur in making good any default, and shall promptly make payment to all persons, firms, subcontractors and corporations who may furnish materials or labor under the Contract, then this obligation shall be void; otherwise to remain in full force and effect. The obligations of Contractor and Surety under this bond apply both to the original Contract and to any extension or modification of the Contract and Surety agrees that no change, extension of time, addition, expansion or other modification of the Contract, the work to be done under the Contract, or the plans and specifications which are a part of the Contract shall in any manner affect the obligations of Surety under this bond, and Surety waives notice of any such change, extension of time, addition, expansion or other modification. The obligations of Contractor and Surety under this bond are performable and payable in Dallas County, Texas such that exclusive venue for any legal action pertaining to this bond shall lie in Dallas County, Texas. By their signatures below, the persons signing this bond warrant and represent that they are, respectively, duly authorized to sign on behalf of Contractor and Surety.

EXECUTED this the _____ day of _____, 2_____.

CONTRACTOR: SURETY: 1

By:_____ By:_____

Title:_____ Title:_____

ACKNOWLEDGMENTS
[Contractor]

STATE OF TEXAS }
COUNTY OF DALLAS }

Before me _____ (insert the name of the officer) on this day _____ personally appeared _____ known to me (or proved to me on the oath of _____) or through _____ (description of identity card or other document) to be the person whose name is subscribed to the forgoing instrument and acknowledged to me that he/she executed the same for the purpose and consideration therein expressed.

Given under my hand and seal of office this _____ day of _____, 2_____.

_____ _____
Notary Public in and for the State of Texas Typed or Printed Name of Notary
My Commission Expires:_____

[Surety]

STATE OF TEXAS }
COUNTY OF DALLAS }

This instrument was acknowledged before me on the ____day of _____, 2_____ by _____ who is the _____ of the Surety, on behalf of Surety.

GIVEN UNDER MY HAND AND SEAL OF OFFICE this the _____ day of _____, 2_____.

_____ _____
Notary Public in and for the State of Texas Typed or Printed Name of Notary

My Commission Expires:_____

1 Please see attached contact sheet for Surety and the Texas Department of Insurance.

## Payment and Performance Bond Contact Sheet

(1) Claims:

All notices of claims shall be sent to the surety at the following address:

_____
(Name of surety)

_____
(Mailing address)

_____
(Physical address)

_____
(Phone number)

(2) Texas Department of Insurance Contact Number:

The address and contact information of the surety may otherwise be obtained by contacting the Texas Department of Insurance at the following toll free telephone number:

**1-800-252-3439.**

**SECTION PyB**

# PAYMENT BOND

**PAYMENT BOND**

STATE OF TEXAS }
COUNTY OF DALLAS }

WHEREAS, _____, as principal ("Contractor") and _____, a corporation organized under the laws of _____ and being duly authorized to do business in the State of Texas, as surety ("Surety")(whether one or more), do hereby expressly acknowledge themselves to he held and bound to pay to the Town of Addison, Texas, a home-rule municipality organized and operating under the Constitution and laws of the State of Texas (the "Town"), its successors and assigns, and to all persons, firms, subcontractors and corporations who may furnish materials or labor under the contract as more fully described below, the sum of _____ Dollars in the lawful currency of the United States of America ($ ) for the payment of which Contractor and Surety are liable to the Town, jointly and severally; and

WHEREAS, Contractor has this day entered into a written contract with the Town to build and construct _____
_____

which contract and the plans and specifications therein mentioned (collectively referred to hereinafter as the "Contract") are hereby expressly incorporated into and made a part hereof as though set forth at length; and

WHEREAS, this bond is given pursuant to Chapter 2253 of the Texas Government Code;

NOW, THEREFORE, if Contractor shall promptly make payment to all persons, firms, subcontractors and corporations who may furnish materials or labor under the Contract, then this obligation shall be void; otherwise to remain in full force and effect. The obligations of Contractor and Surety under this bond apply both to the original Contract and to any extension of time or modification of the Contract and Surety agrees that no change, extension of time, addition, expansion or other modification of the Contract, the work to be done under the Contract, or the plans and specifications which are a part of the Contract shall in any manner affect the obligations of Surety under this bond, and Surety waives notice of any such change, extension of time, addition, expansion or other modification. The obligations of Contractor and Surety under this bond are performable and payable in Dallas County, Texas such that exclusive venue for any legal action pertaining to this bond shall lie in Dallas County, Texas. By their signatures below, the persons signing this bond warrant and represent that they are, respectively, duly authorized to sign on behalf of Contractor and Surety.

EXECUTED this the _____ day of _____, 2_____.

CONTRACTOR: SURETY: [1]

By:_____ By:_____

Title:_____ Title:_____

ACKNOWLEDGMENTS
[Contractor]

STATE OF TEXAS }
COUNTY OF DALLAS }

Before me _____ (insert the name of the officer) on this day _____ personally appeared _____ known to me (or proved to me on the oath of _____) or through _____ (description of identity card or other document) to be the person whose name is subscribed to the forgoing instrument and acknowledged to me that he/she executed the same for the purpose and consideration therein expressed.

Given under my hand and seal of office this _____ day of _____, 2_____.

_____ _____
Notary Public in and for the State of Texas Typed or Printed Name of Notary
My Commission Expires:_____

[Surety]

STATE OF TEXAS }
COUNTY OF DALLAS }

This instrument was acknowledged before me on the _____ day of _____, 2_____ by _____ who is the _____ of the Surety, on behalf of Surety.

GIVEN UNDER MY HAND AND SEAL OF OFFICE this the _____ day of _____, 2_____.

_____ _____
Notary Public in and for the State of Texas Typed or Printed Name of Notary

My Commission Expires:_____

[1] Please see attached contact sheet for Surety and the Texas Department of Insurance

## Payment and Performance Bond Contact Sheet

(1) Claims:

All notices of claims shall be sent to the surety at the following address:

_____
(Name of surety)

_____
(Mailing address)

_____
(Physical address)

_____
(Phone number)

(2) Texas Department of Insurance Contact Number:

The address and contact information of the surety may otherwise be obtained by contacting the Texas Department of Insurance at the following toll free telephone number:

**1-800-252-3439.**

**SECTION MB**

# MAINTENANCE BOND

**MAINTENANCE BOND – TWO YEAR**

STATE OF TEXAS '

COUNTY OF DALLAS '

WHEREAS,_____, as principal ("Contractor") and _____, a corporation organized under the laws of _____ and being duly authorized to do business in the State of Texas, as surety ("Surety")(whether one or more), do hereby expressly acknowledge themselves to he held and bound to pay to the Town of Addison, Texas, a home-rule municipality organized and operating under the Constitution and laws of the State of Texas (the "Town"), its successors and assigns the sum of _____ Dollars in the lawful currency of the United States of America ($ ) for the payment of which Contractor and Surety are liable to the Town, jointly and severally; and

WHEREAS, Contractor has this day entered into a written contract with the Town to build and construct which contract and the plans and specifications therein mentioned (collectively referred to hereinafter as the "Contract") are hereby expressly incorporated into and made a part hereof as though set forth at length; and

WHEREAS, under the Contract it is provided that the Contractor will maintain and keep in good repair all work to be performed and done under the Contract for a period of **two (2) years** from and after its date of final completion and written acceptance by the Town, and to do and perform all necessary work and repair any defective condition, it being understood that the purpose of this maintenance bond is to insure all warranties, express or implied, made or given by the Contractor to the Town and to cover all defective, inadequate or non-conforming conditions arising by reason of any materials or labor installed, provided, constructed or performed by the Contractor and in case the Contractor shall fail to correct any such conditions it is agreed that the Town may make such corrections and charge the cost of making those corrections against the Contractor and the Surety on this obligation, and the Contractor and Surety shall be subject to the liquidated damages provided in the contract, the plans and the specifications for each day's failure on its part to comply with the terms and provisions of the Contract;

NOW, THEREFORE, if the Contractor shall keep and perform its obligation to maintain the work and keep the work in repair for the full maintenance period of two (2) years as herein provided, then these presents shall be null and void and have no further effect, but if default shall be made by Contractor in the performance of its obligations, then these presents shall have full force and effect, and the Town shall have and recover from the Contractor and its Surety damages in the premises as provided and it is further understood and agreed that this obligation shall be a continuing one against the Contractor and the Surety and that successive recoveries may be had hereon for successive breaches until the full amount of this bond shall have been exhausted; and it is further understood that the obligation under this bond to maintain the work shall continue throughout the maintenance period and shall not be changed, diminished, or in any other manner affected during the term of this bond. The obligations of Contractor and Surety under this bond apply both to the original Contract and to any extension or modification of the Contract and Surety agrees that no change, extension of time, addition, expansion or other modification of the Contract, the work to be done under the Contract, or the plans and specifications which are a part of the Contract shall in any manner affect the obligations of Surety under this bond, and Surety waives notice of any such change, extension of time, addition, expansion or other modification. The obligations of Contractor and Surety under this bond are performable and payable in Dallas County, Texas such that exclusive venue for any legal action pertaining to this bond shall lie in Dallas County, Texas. By their signatures below, the persons signing this bond warrant and represent that they are, respectively, duly authorized to sign on behalf of Contractor and Surety.

EXECUTED this the _____ day of _____, 2_____.

| CONTRACTOR: | SURETY: |
|---|---|
| By:_____ | By:_____ |
| Printed Name:_____ | Printed Name:_____ |
| Title:_____ | Title:_____ |
| Address of Principal: | Address of Surety: |
| _____ | _____ |
| _____ | _____ |
| _____ | _____ |

ACKNOWLEDGMENTS

[Contractor]

STATE OF TEXAS '
COUNTY OF DALLAS '

Before me _____(insert the name of the officer) on this day _____ personally appeared _____ known to me (or proved to me on the oath of _____) or through _____ (description of identity card or other document) to be the person whose name is subscribed to the forgoing instrument and acknowledged to me that he/she executed the same for the purpose and consideration therein expressed.

Given under my hand and seal of office this _____ day of _____, 2_____.

_____ _____
Notary Public in and for the State of Texas Typed or Printed Name of Notary
My Commission Expires:_____

[Surety]

STATE OF TEXAS '
COUNTY OF DALLAS '

This instrument was acknowledged before me on the ___ day of _____, 2_____ by _____ who is the _____ of the Surety, on behalf of Surety.

GIVEN UNDER MY HAND AND SEAL OF OFFICE this the _____ day of _____, 2_____.

_____ _____
Notary Public in and for the State of Texas Typed or Printed Name of Notary
2-4-13 2 yr

**SECTION BP**

# CONTRACTOR'S AFFIDAVIT OF BILLS PAID

# CONTRACTOR'S AFFIDAVIT OF BILLS PAID

STATE OF TEXAS

COUNTY OF DALLAS

Personally, before me the undersigned authority, on this day appeared _____ who, being duly sworn, on oath, says that he is a legal representative of _____
(full name of Contractor as in contract)

and that the contract for the construction of the project, designated as

**BELLA LANE SOUTH EXTENSION & ALPHA ROAD CONNECTOR**

**INFRASTRUCTURE AND DEVELOPMENT SERVICES BID NUMBER 21-69**

has been satisfactorily completed and that all bills for materials, apparatus, fixtures, machinery and labor used in connection with the construction of this project have, to the best of my knowledge and belief, been fully paid.

_____
Signature

_____
Title

Sworn to and subscribed before me this _____day of _____, 202_.

_____
Notary Public in and for

_____ County, Texas

**Instructions:**

If the contractor is an individual, he shall sign the affidavit. If the contractor is a partnership, any partner may sign the affidavit. If the contractor is a corporation, a person authorized by the by-laws or by the Board of Directors shall sign the affidavit. If the Contractor is a joint-venture of individuals, any of the individuals may sign the affidavit. If the Contractor is a joint-venture of partnerships, or of individuals and partnerships, the affidavit may be signed by the individual or any partner of any partnership. If the contractor is a joint-venture in which a corporation is a party, separate affidavits must be executed in the name of the joint-venture: one by each corporation and one by each individual or partnership. Signatures for corporations should be by a duly authorized officer. If signature is by another, a showing of authority to sign must accompany the affidavit.

**SECTION GP**

# GENERAL PROVISIONS

# GENERAL PROVISIONS

The General Provisions of the Contract shall be as stated in the *Standard Specifications for Public Works Construction – North Central Texas, 5th Edition (2017)*, under Division 100, "General Provisions," Items 101.1 through 109.6 inclusive, as amended or supplemented and except as modified by the Special Provisions or Instructions to Bidders.

# SECTION SP

# SPECIAL PROVISIONS

## SPECIAL PROVISIONS

1. **SCOPE OF WORK:** The Work to be performed under the provisions of these Contract Documents shall consist of furnishing all materials, labor, equipment, supplies and appurtenances; providing all construction, plant, equipment and tools; performing all necessary labor and supervision; and the construction complete, including all Work appurtenant thereto, the proposed improvements for: **BELLA LANE SOUTH EXTENSION & ALPHA ROAD CONNECTOR**.

2. **GENERAL:** This Work shall conform to the requirements of the Contract Documents as listed in the Contract Agreement. These Contract Documents are intended to be complementary. The Contractor shall do all work as provided in the Contract Documents shall do such additional Extra work as may be considered necessary to complete the work in a satisfactory and acceptable manner. The Contractor shall furnish all labor, tools, materials, machinery, equipment, and incidentals necessary to the satisfactory prosecution and completion of the Work.

3. **EXAMINATION OF SITE:** The Contractor acknowledges that he has investigated and satisfied itself as to the conditions affecting the Work, including but not restricted to those bearing upon transportation, disposal, handling and storage of materials, availability of labor, water, electric power, roads and uncertainties of weather, or similar physical conditions at the site, conditions of the ground, the character of equipment and facilities needed preliminary to and during prosecution of the Work. The Contractor acknowledges that he has inspected the site of the Work and is familiar with the soil conditions to be encountered. Any failure by the Contractor to acquaint himself with the available information will not relieve him from responsibility for estimating properly the difficulty or cost of successfully performing the Work. The Town of Addison assumes no responsibility for any conclusions or interpretations made by the Contractor on the basis of the information made available by the Town and the Engineer of Record (**Kimley-Horn and Associates, Inc.).**

4. **SPECIFICATIONS:** Construction improvements shall be governed by the following published specifications and details (except as modified by these Special Provisions):

   Standard Specification for Construction and Maintenance of Highways, Streets, and Bridges, Texas Department of Transportation (November 2014);Standard Specifications for Public Works Construction, North Central Texas - North Central Texas Council of Governments (5th edition, 2017); Town of Addison Standard Construction Details;

   The Contractor shall keep copies of applicable Specifications on the Project site at all times.

   Where reference is made to specifications compiled by other agencies, organizations or departments, such referenced specifications are hereby made a part of the Project Specifications.

   Portions of TxDOT standards and specifications, latest editions, shall be incorporated into this contract by specific reference in the contract plans and specifications. In the event of

conflict with other documents, TxDOT standards and specifications shall govern for construction materials and methods. In the event of conflict with other documents, Town of Addison contract documents shall govern for contract procedures and measurement and payment.

**5.** **SUBSURFACE INVESTIGATION:** Subsurface exploration to ascertain the nature of soils, including the amount of rock, if any, is the responsibility of any and all prospective Bidders. It shall be the responsibility of the Bidders to make such subsurface investigations as he deems necessary to determine the nature of the material to be encountered. Some preliminary subsurface exploration has been performed by the Town of Addison and the Engineer, and is provided to the Contractor in the Contract Documents. This information is provided only as preliminary and all bids shall be based on information obtained by the Contractor. The Town of Addison and the Engineer disclaim any responsibility for the accuracy, true location and extent of the soils information that has been prepared by others. They further disclaim responsibility for interpretation of that data by Bidders, as in projecting soil bearing values, rock profiles, soils stability and the presence, level and extent of underground water.

**6.** **HISTORICAL, SCIENTIFIC AND ARCHAEOLOGICAL DISCOVERIES:** Contractor shall immediately give an oral and written report to the Town of Addison of the discovery of any articles of historical, scientific, or archaeological significance. Contractor shall take all necessary steps to preserve the article and shall cease operations, which would affect the find until otherwise directed by the Town of Addison but continue with all other unaffected operations. The future operations of Contractor with respect to the discovery, including disposition of the articles, shall be decided by the Town of Addison. The Town of Addison shall have sole and exclusive title to any discovered articles.

The Town of Addison shall investigate the site conditions promptly after receiving the notice. If the conditions do materially so differ and cause an increase or decrease in Contractor's cost of, or the time required for performing any part of the work under the Contract, whether or not changed as a result of conditions, an equitable adjustment will be made and the Contract modified in writing accordingly.

No request by Contractor for an equitable adjustment to the Contract under this Section shall be allowed unless Contractor has given the written notice required. No request by Contractor for an equitable adjustment of the Contract for differing site conditions will be allowed or shall be made after final payment under the Contract.

**ENVIRONMENTAL REQUIREMENTS**: In addition to requirements set forth in other sections of the Contract, including the Plans and Specifications, Contractor shall ensure that the requirements of this Section are fulfilled and incorporated into its procedures and processes as well as those of any Subcontractors. All materials utilized by Contractor on the Project shall comply with all applicable local, state and federal laws and regulations.

A. Contractor is responsible for compliance with any requirements included in the Contract Documents regarding Hazardous Materials. If Contractor encounters a hazardous material or substance not addressed in the Contract Documents and if reasonable

precautions will be inadequate to prevent foreseeable bodily injury or death to persons resulting from a material or substance, including but not limited to asbestos or polychlorinated biphenyl (PCB), encountered on the site by Contractor, Contractor shall, upon recognizing the condition, immediately stop Work in the affected area and report the condition to the Town of Addison in writing.

1. The term "Hazardous Materials" means any substance or compound, whether solid, liquid or gaseous: (i) which is listed, defined or regulated as a "hazardous substance", "hazardous waste", "extremely hazardous waste", "solid waste", "toxic substance", "hazardous substance", "hazardous material" or "regulated substance" or otherwise classified as hazardous or toxic, in or pursuant to any Environmental Law; or (ii) which is or contains asbestos, radon, any polychlorinated biphenyl, urea formaldehyde foam insulation, explosive or radioactive material, lead, or motor fuel or other volatile organic compounds; or (iii) which causes or poses a threat to cause a contamination or nuisance on the Project Site or any adjacent property, or (iv) which causes or poses a threat to cause a hazard to the environment or to the health, safety or welfare of persons on or about the Project Site.

2. The term "Environmental Law" means any federal, state or local law, statute, guidance or policy statement, ordinance, code, rule, regulation, license, authorization, decision, order, injunction or decree, which pertains to health, safety or the environment (including, but not limited to, ground, air, water or noise pollution or contamination, and underground or aboveground tanks) and shall include without limitation, the Comprehensive Environmental Response, Compensation and Liability Act of 1980, as amended, the Resource Conservation and Recovery Act of 1976, as amended, the Occupational Health and Safety Act, the Toxic Substances Control Act, the Texas Water Code and the Texas Solid Waste Disposal Act and any other state or federal environmental statutes.

B. If the material or substance was on the site prior to the issuance of the Notice to Proceed, the Town of Addison shall obtain the services of a licensed laboratory to verify the presence or absence of the material or substance reported by Contractor and, in the event such material or substance is found to be present, to verify that it has been remediated to levels required by the Texas Commission on Environmental Quality. When the material or substance has been remediated, Work in the affected area shall resume upon written direction of the Town of Addison.

C. Except as provided in Subparagraph B., Contractor (with the Town of Addison's prior written approval of the laboratory) shall obtain the services of a licensed laboratory to verify the presence or absence of the material or substance reported by Contractor and, in the event such material or substance is found to be present, the Town of Addison shall determine whether Contractor or the Town of Addison shall have the substance remediated to levels required by the Texas Commission on Environmental Quality. When the material or substance has been remediated, Work in the affected area shall resume upon written direction of the Town of Addison. The Contract time shall be not be extended and the Contract Price shall not be increased, unless the material or substance to be remediated

were not introduced to the Work Site by Contractor, and Contractor shall then pay for (or reimburse the Town of Addison for) the testing and remediation.

D. The Town of Addison shall not be responsible under this Section for materials or substances Contractor brings or introduces to the Project Site. Contractor shall be responsible for the fault or negligence in the use and handling of materials or substances of Contractor, Subcontractor, Sub-subcontractor, or anyone directly or indirectly employed by any of them.

E. Contractor shall indemnify the Town of Addison and its affiliates for any and all damages incurred by the Town of Addison as a result of Contractor's actions with respect to all applicable state and federal environmental laws related to materials or substances Contractor brings to the Project Site, including but not limited to fines, penalties, costs of remediation and reasonable attorney's fees. No time extension shall be granted for breach of this provision.

F. Contractor agrees that it shall not transport to, use, generate, dispose of, or install at the Project Site any Hazardous Materials, except in accordance with applicable environmental laws. Further, in performing the Work, Contractor shall not cause any release of Hazardous Materials into, or contamination of, the environment, including the soil, the atmosphere, any water course or ground water unless required by the Contract Documents. In the event Contractor engages in any of the activities prohibited in this Section or fails to stop Work as provided in this Section, to the fullest extent permitted by law, Contractor hereby indemnifies and holds the Town of Addison, its affiliates and their respective officers, agents, employees and tenants harmless from and against any and all claims, damages, losses, causes of action, suits and liabilities of every kind, including but not limited to, expenses of litigation, court costs, punitive damages and attorneys' fees, arising out of, incidental to or resulting from the activities prohibited in this Section or Contractor's failure to stop Work as required. Contractor shall obtain from manufacturers and furnish to the Town of Addison Materials Safety Data Sheets (OSHA Form 20) for all materials incorporated into the Project by Contractor. The Town of Addison hereby agrees that, as between the Town of Addison and Contractor, the Town of Addison will be responsible for Hazardous Materials on site which existed prior to Contractor performing Work on the Project Site or which are introduced to the Project Site by the Town of Addison, except as provided in this Section. Contractor will not be considered the generator of Hazardous Materials on site which existed prior to Contractor performing Work on the Work Site or which are introduced to the Project Site by the Town of Addison. If the Hazardous Materials were on the Project Site prior to Contractor's presence on the Project Site or were introduced to the Project Site by the Town of Addison, then, if appropriate, the Town of Addison will make an equitable adjustment to the Contract.

G. Include in all construction subcontracts exceeding $100,000, the following requirement: "Contractor is responsible for compliance with all applicable standards, orders, or requirements issued under Section 306 of the Clean Air Act, Section 505 of the Clean Water Act, Executive Order 11738, and Environmental Protection Agency regulations."

H. No request by Contractor for an equitable adjustment to the Contract under this Section shall be allowed unless Contractor has given the written notice required.

I. No request by Contractor for an equitable adjustment of the Contract for Hazardous Materials will be allowed or shall be made after final payment under the Contract.

**7.** **COMPLIANCE WITH LAWS:** The Contractor shall familiarize himself with the nature and extent of the Specifications, Plans, Project Site conditions, traffic and safety requirements, and shall fully comply with all local, state and federal laws, including all codes, ordinances, rules and regulations applicable to this Contract and the Work to be done hereunder, which exist or which may be enacted later by governmental bodies having jurisdiction or authority for such enactment. The Contractor shall comply with all federal, state and local laws, rules and regulations of every kind and nature applicable to the performance of its Work hereunder, and shall hold the Town of Addison and the Engineer harmless therefrom. No plea of ignorance or misunderstanding thereof will be considered.

**8.** **PERMITS, LICENSES. AND REGULATIONS:** Permits and licenses for the prosecution of the Work shall be secured and paid for by the Contractor. Any required permit fees will still be paid by the Contractor. Wherever the Work under this contract requires the obtaining of permits from the Town of Addison or other public authorities, duplicate copies of such permits shall be furnished to the Engineer by the Contractor hereunder before the Work covered thereby is started. **NO WORK WILL BE ALLOWED TO PROCEED BEFORE SUCH PERMITS ARE OBTAINED.**

**9.** **RIGHTS-OF-WAY AND EASEMENTS:** Rights-of-way and permanent easements, dedicated to the Town of Addison, will be secured for this Project and made a part of thereto. The Contractor shall obtain a right-of-way permit from the Town of Addison prior to beginning Work. When working within the public rights-of-way and easements, the Contractor shall at all times observe and comply with all Federal and State Laws, and Town of Addison ordinances and regulations which in any way affect the conduct of the Work or its operations, and shall observe and comply with all orders, laws, ordinances and regulations which exist or which may be enacted later by bodies having jurisdiction or authority for such enactment. No plea of misunderstanding or ignorance thereof will be considered. The Contractor and his Sureties shall indemnify and save harmless the Town of Addison, the Engineer and all of their officers, agents, and employees against any and all claims or liability arising from or based on the violation of any such law, ordinance, regulation, or order, whether it be by itself or its employees.

It shall be the responsibility of the Contractor, prior to the initiation of construction on easements through private property, to inform the property owner of its intent to begin construction. Before beginning construction in areas of public dedication, the Contractor shall inform the agency having jurisdiction in the area forty-eight (48) hours prior to initiation of the Work. All easements shall be cleaned up after use and restored to their original conditions or better.

**10.** **RESTRICTED WORK HOURS:** Per the Town of Addison Building Regulations, "It shall be unlawful for a person, firm or corporation to excavate, erect, build, construct,

alter, repair or demolish any building or structure which has been issued or which is required to be issued a building permit by the Town of Addison between the hours of 7:00 p.m. and 7:00 a.m. Monday through Friday, and between the hours of 7:00 p.m. and 8:00 a.m. on Saturday and Sunday, if such activity is performed within a residential, apartment, or townhouse zoned area, or within three hundred (300) feet of an occupied residence, except in cases of urgent necessity or in the interest of public safety and convenience, and then only by permit of the City Manager."

**11.** **COMPLIANCE WITH IMMIGRATION LAWS:** Contractor shall take all steps necessary to ensure that all of the Contractor's employees are authorized to work in the United States as required by the Immigration Reform and Control Act of 1986.

**12.** **NON-DISCRIMINATION POLICY:** It is the policy of the Town of Addison to afford all people an equal opportunity to bid on any contract being let by the Town. The Town of Addison has a policy that prohibits discrimination against any person because of race, color, sex, or national origin, in the award or performance of any contract. The Town of Addison will require its employees, agents, and Contractors to adhere to this policy.

**13.** **ANTITRUST LAWS:** The Contractor hereby assigns to the Town of Addison any and all claims for overcharges associated with this contract which arise under the antitrust laws of the United States 15 U.S.C.A. Sec. 1, et seq. (1973).

**14.** **ABANDONMENT:** The Town of Addison reserves the right to abandon, without obligation to the Contractor, any part of the Project, or the entire Project, at any time before the Contractor begins any construction Work authorized by the Town of Addison. In case of total abandonment of the Project, the Contract becomes void. The Town of Addison may abandon portions of the Project at any time during the Project duration. In case of such partial abandonment, the Contractor shall not be due any payment for lost or unrealized profits on the abandoned portions of the Project.

**15.** **DISCREPANCIES:** If the Contractor, in the course of the Work, finds any discrepancy between the Contract Documents and the physical conditions of the Project, or any errors or omissions in Plans or in the layout as given by survey points and instructions, or if it appears that any Plan, Specification or other Contract Document is or may not be in compliance with any building code or other requirement of any governmental body, he shall immediately inform the Town of Addison and the Engineer in writing, and the Town of Addison and the Engineer shall promptly verify the same. Any Work done after such discovery, until authorized, will be done at the Contractor's risk.

**16.** **PREPARATION OF STORM WATER POLLUTION PREVENTION PLAN:** A Storm Water Pollution Prevention Plan (SW3P) will be required for this project, the area disturbed on this project during construction exceed 1 acre.

This specification is not all inclusive of the requirements for an SW3P. The Contractor shall comply with all requirements of the TCEQ TPDES permit and the local authorities' storm water ordinance and/or regulations.

17. **ADDENDA:** Bidders desiring further information, or interpretation of the Plans and Specifications, must make written request for such information to the Engineer (not later than four (4) working days prior to the date set for the Bid opening. The ability to ask questions will close at **5:00 PM, Wednesday, October 13, 2021**. Answers to all such requests will be issued in the form of Addenda and a copy of such Addenda will be released through www.civcastusa.com. It will be the responsibility of each person who has been issued as set of Bidding Documents to secure all Addenda from www.civcastusa.com . Addenda will be bound with and made a part of the Contract Documents. No other explanation or interpretation will be considered official or binding. Should a Bidder find discrepancies in, or omissions from, the Plans, Specifications or Contract Documents, or should it be in doubt as to their meaning, it shall at once notify the Engineer in writing in order that a written addendum may be sent to all Bidders.

18. **PAY ITEMS:** Pay items provided are intended to be all-inclusive of the Work required on this Project. Work required by the Plans or Specifications but not provided with a specific pay item shall be considered incidental to other items of Work. Final payment to the construction Contractor shall not be made until all Work has been finally completed and verified in accordance with the construction contract, Plans and Specifications and have been finally accepted by the Town of Addison.

19. **QUANTITIES:** The quantities in the Bid Items are approximate and may represent quantities in excess of those actually installed. Final Payment will be based on the actual quantities installed and paid in accordance with the applicable Specifications.

## Bid Items descriptions

### Bid Item No. P1 - MOBILIZATION (5% MAX)

This item shall cover the lump sum cost for all charges for labor and for moving supplies, construction equipment and materials to the project site at the beginning of the project and for removing the same equipment and related supplies upon completion of the project, and for site cleanup. **See Special Provisions No. 25 for details for payment for this line Item.**

### Bid Item No. P2 - BARRICADES, SIGNS, AND TRAFFIC HANDLING

This item shall include the lump sum cost for installation, maintenance, relocation, and removal of all traffic signs (street name, directional, informational or regulatory), barricades, temporary signs, temporary pavement markings (except those identified in the permanent pavement marking bid items), traffic control plan and all other traffic control measures necessary to provide for the safe travel of vehicles and pedestrians through, along, or around the construction site and for the protection of the workers on the project. All barricades and warning signs will conform to those sections of the Texas Manual on Uniform Traffic Control Devices, latest edition, as amended by the Texas Department of Transportation. **See Special Provisions No. 50 and 51 for additional information.**

Partial payment of the Lump Sum bid shall be limited as follows:

1. When 5% of the *adjusted contract amount is earned, 25% of the Lump Sum bid shall be paid.

2. When 25% of the *adjusted contract amount is earned, 50% of the Lump Sum bid shall be paid. Previous payments under this item will be deducted from this amount.

3. When 50% of the *adjusted contract amount is earned, 75% of the Lump Sum bid shall be paid. Previous payments under this item will be deducted from this amount.

4. When all work under the contract is completed by the Contractor and accepted by the City, 100% of the Lump Sum bid shall be paid.

5. An overrun of the contract quantity will not be allowed under any circumstances unless the quantity is added by an approved change order.

Additional Notes - If the Contractor fails to provide properly maintain barricades, signs, and traffic control devices in compliance with the specifications, the Contractor will be considered in non-compliance with this item and payment may be delayed for this item.

**Bid Item No. P3 - PROJECT SIGN**

This item shall consist of the installation of a project sign in the locations approved by the OWNER. Each sign shall be constructed in accordance with the details found in Section PS of the Specification, details and notes, including NCTCOG Item 107.21.

Measurement and payment shall be made on the basis of price bid per each (EA) and shall be total compensation for furnishing all materials, tools, equipment, labor, and any other incidentals necessary to complete the work.

**Bid Item No. P4 - GENERAL SITE PREPARATION**

This work includes the preparing the jobsite within the project limits requiring such work, unless otherwise noted. This includes work within the right-of-way and any adjacent property that is necessary to complete the work as shown on the construction plans or as determined by the ENGINEER in accordance with the appropriate details and specifications, including NCTCOG Item 203.1. All vegetation within the paving limits shall be removed.

This work may also include, but not be limited to:

(a) The removal of existing pavement markings and traffic buttons;
(b) The removal or relocation of any existing barricades or signage;
(c) The removal of any existing driveway/roadway;
(d) The removal and relocation of any fencing and gates within the proposed right of way as specified within the construction plans;

(e) The removal of existing rock rip rap;
(f) The removal of a portion of the existing retaining wall at the locations shown in the construction plans;
(g) The removal of landscape edging;
(h) The removal of mailboxes;
(i) Any grading activities (excavation or fill) deemed necessary to prepare the proposed grades of the subgrade prior to pavement, unless separate bid items are provided for excavation or embankment;
(j) The removal and salvage of any existing regulatory, school or informational signs;
(k) The removal of all trees, stumps, bushes, vegetation, roots and shrubs not specified and are within the limits of work;
(l) Adjusting water vaults to finished grade as indicated on the plans;
(m) Protection and replacement of existing irrigation equipment.
(n) Dewatering of site for access.

These items of work will not be paid for directly but shall be considered subsidiary to this pay item. Any item indicated in the plans to be removed (directly called out or implied) for which there is no specific pay item shall be considered subsidiary to this pay item.

Measurement and payment for work performed and materials furnished related to general site and/or right of way preparation, as provided herein, shall be made on the basis of the price bid per lump sum (LS) and shall be total compensation for furnishing and/or operating all labor, materials, tools, equipment and other incidentals necessary to complete the work.

**Bid Item No. P5 - REMOVE EX HEADWALL**

This item shall consist of the removal and disposal of the existing headwall(s) at the locations shown in the drawings. Existing headwall shall be removed in accordance with appropriate specifications, details, and notes, including NCTCOG Item 701.2.

Measurement and payment shall be made on the basis of price bid per each (EA) and shall be total compensation for furnishing all materials, tools, equipment, labor, and any other incidentals necessary to complete the work.

**Bid Item No. P6 - REMOVAL OF EX 54" RCP**

This item shall consist of the removal and disposal of existing 54” reinforced concrete pipe at the locations shown in the drawings. Existing 54” reinforced concrete pipe shall be removed in accordance with appropriate specifications, details, and notes, including NCTCOG Item 701.2.

Measurement and payment shall be made on the basis of price bid per linear feet (LF) and shall be total compensation for furnishing all materials, tools, equipment, labor, and any other incidentals necessary to complete the work.

**Bid Item No. P7 - REMOVE EXISTING CONCRETE SIDEWALK/RAMPS**

This item shall consist of the removal and disposal of existing concrete sidewalks and curb ramps at the locations shown in the drawings. Existing concrete sidewalks and curb ramps shall be removed in accordance with appropriate specifications, details, and notes, including NCTCOG Item 701.2.

Measurement and payment shall be made on the basis of price bid per square yard (SY) and shall be total compensation for furnishing all materials, tools, equipment, labor, and any other incidentals necessary to complete the work.

**Bid Item No. P8 - REMOVE EXISTING ASPHALT PAVEMENT**

This item shall consist of the removal and disposal of asphalt pavement at the locations shown in the drawings. Existing asphalt pavement shall be removed in accordance with appropriate specifications, details, and notes, including NCTCOG Item 701.2.

Measurement and payment shall be made on the basis of price bid per square yard (SY) and shall be total compensation for furnishing all materials, tools, equipment, labor, and any other incidentals necessary to complete the work.

**Bid Item No. P9 - REMOVE EXISTING TREES**

This item shall consist of the removal and disposal of existing trees at the locations shown in the drawings. Existing trees shall be removed in accordance with appropriate specifications, details, and notes, including NCTCOG Item 204.1

Measurement and payment shall be made on the basis of price bid per each (EA) and shall be total compensation for furnishing all materials, tools, equipment, labor, and any other incidentals necessary to complete the work.

**Bid Item No. P10 - UNCLASSIFIED STREET EXCAVATION**

This work consists of all the required excavation within the limits of the right-of-way and adjacent areas to establish the roadway cross-section, grade, drainage ditches and profile as shown on the plans. All excavation is considered unclassified and shall be performed to the lines & grades shown on the construction plans or as directed by the ENGINEER, in accordance with the appropriate specifications, details and notes, including NCTCOG Item 203.2, 203.4 & 203.5.

This item also includes temporary stockpiling, placement, and compaction of excavated or borrow material required for this project, in accordance with the appropriate specifications. Fill shall be placed and compacted (minimum 95% of maximum dry density) in accordance with the specifications, details, notes, and geotechnical report.

This is a “Plans Quantity” item and will not be measured unless there are revisions to the scope of work. Payment for work performed and materials furnished related to the unclassified excavation and embankment, as provided herein, shall be made on the basis of the price bid per lump sum (LS) for unclassified excavation and shall be total compensation for furnishing and/or

operating all labor, materials, tools, equipment and other incidentals necessary to complete the work.

**Bid Item No. P11 - BORROW AND SPOIL (ROADWAY)**

This work consists of all the require fill within the limits of the right-of-way and adjacent areas to establish the roadway cross-section, grade, drainage ditches and profile as shown on the plans. All fill is considered unclassified and shall be performed to the lines & grades shown on the construction plans or as directed by the ENGINEER, in accordance with the appropriate specifications, details and notes, including NCTCOG Item 203.2, 203.4 & 203.5.

This item also includes temporary stockpiling, placement, and compaction of excavated or borrow material required for this project, in accordance with the appropriate specifications. Fill shall be placed and compacted (minimum 95% of maximum dry density) in accordance with the specifications, details, notes, and geotechnical report.

This is a "Plans Quantity" item and will not be measured unless there are revisions to the scope of work. Payment for work performed and materials furnished related to the unclassified fill, as provided herein, shall be made on the basis of the price bid per lump sum (LS) for unclassified fill and shall be total compensation for furnishing and/or operating all labor, materials, tools, equipment and other incidentals necessary to complete the work.

**Bid Item No. P12 - MOISTURE TREATED SUBGRADE**

This item shall consist of the moisture treatment of the roadway subgrade to the limits shown and locations shown in the drawings. The subgrade shall be treated in accordance with project specification, notes, and geotechnical report.

Measurement and payment shall be made on the basis of price bid per square yard (SY) and shall be total compensation for furnishing all materials, tools, equipment, labor, and any other incidentals necessary to complete the work.

**Bid Item No. P13 - 6" LIME STABILIZED SUBGRADE**

This item shall consist of lime stabilization of the roadway subgrade to the limits shown and locations shown in the drawings. The subgrade shall be stabilized in accordance with project specification, geotechnical report, and notes, including NCTCOG Item 301.2.

Measurement and payment shall be made on the basis of price bid per square yard (SY) and shall be total compensation for furnishing all materials, tools, equipment, labor, and any other incidentals necessary to complete the work.

**Bid Item No. P14 - HYDRATED LIME**

This item shall consist of furnishing hydrate lime for the stabilization of the roadway subgrade to the limits shown and locations shown in the drawings. Hydrated lime shall be in accordance with project specification, geotechnical report, and notes, including NCTCOG Item 301.2.

Measurement and payment shall be made on the basis of price bid per ton (TON) and shall be total compensation for furnishing all materials, tools, equipment, labor, and any other incidentals necessary to complete the work.

**Bid Item No. P15 - 4" TYP B HMAC (TXDOT)**

This item shall consist of installation of type B hot mix asphalt concrete at the locations shown in the drawings. Hot mix asphalt concrete shall be installed accordance with project specification, details, and notes, including TxDOT Item 340.

Measurement and payment shall be made on the basis of price bid per ton (TON) and shall be total compensation for furnishing all materials, seal coat, tack coat, tools, equipment, labor, and any other incidentals necessary to complete the work.

**Bid Item No. P16 - 8" REINFORCED CONCRETE PAVEMENT (STREET)**

This item shall consist of installation of reinforced concrete pavement at the locations shown in the drawings. Concrete pavement shall be installed in accordance with project specification, details, and notes, including NCTCOG Item 303.

Measurement and payment shall be made on the basis of price bid per square yard (SY) and shall be total compensation for furnishing all materials, tools, equipment, labor, and any other incidentals necessary to complete the work.

**Bid Item No. P17 - 10" PORTLAND CEMENT CONC PAVEMENT W/ 6" MONO CURB**

This item shall consist of installation of reinforced concrete pavement with 6” mono curb at the locations shown in the drawings. Concrete pavement shall be installed in accordance with project specification, details, and notes, including NCTCOG Item 303.

Measurement and payment shall be made on the basis of price bid per square yard (SY) and shall be total compensation for furnishing all materials, tools, equipment, labor, and any other incidentals necessary to complete the work.

**Bid Item No. P18 - 6" CURB AND GUTTER**

This item shall consist of installation of 6” curb and gutter at the locations shown in the drawings. Concrete curb and gutter shall be installed in accordance with project specification, details, and notes, including NCTCOG Item 305.1.

Measurement and payment shall be made on the basis of price bid per linear feet (LF) and shall be total compensation for furnishing all materials, tools, equipment, labor, and any other incidentals necessary to complete the work.

**Bid Item No. P19 - REINFORCED CONCRETE STREET HEADERS**

This item shall consist of installation of concrete street headers at the locations shown in the drawings. Concrete street headers and gutter shall be installed in accordance with project specification, details, and notes, including NCTCOG Item 305.4.

Measurement and payment shall be made on the basis of price bid per linear feet (LF) and shall be total compensation for furnishing all materials, tools, equipment, labor, and any other incidentals necessary to complete the work.

**Bid Item No. P20 - 5" CONCRETE SIDEWALK**

This item shall consist of installation of 5” concrete sidewalks at the locations shown in the drawings. Concrete sidewalk shall be installed in accordance with project specification, details, and notes, including NCTCOG Item 305.2.

Measurement and payment shall be made on the basis of price bid per square yard (SY) and shall be total compensation for furnishing all materials, tools, equipment, labor, and any other incidentals necessary to complete the work.

**Bid Item No. P21 – ACCESSIBLE RAMPS**

This item shall consist of installation of curb ramps of the type shown at the locations shown in the drawings. Curb ramps shall be installed in accordance with project specification, details, and notes, including TxDOT Item 531.

Measurement and payment shall be made on the basis of price bid per each (EA) and shall be total compensation for furnishing all materials, tools, equipment, labor, and any other incidentals necessary to complete the work.

**Bid Item No. P22 - RAIL (HANDRAIL) (TY F)**

This item shall consist of installation of handrail of the type shown at the locations shown in the drawings. Handrail shall be installed in accordance with project specification, details, and notes, including TxDOT Item 450.

Measurement and payment shall be made on the basis of price bid per linear feet (LF) and shall be total compensation for furnishing all materials, tools, equipment, labor, and any other incidentals necessary to complete the work.

**Bid Item No. P23 - INSTALL NEW SIGN AND SIGN POST ASSEMBLY**

This item shall consist of installation of new road signs, signposts and assemblies at the locations shown in the drawings. Signs, posts, and assemblies shall be installed in accordance with project specification, details, and notes, including TxDOT Item 644.

Measurement and payment shall be made on the basis of price bid per each (EA) and shall be total compensation for furnishing all materials, tools, equipment, labor, and any other incidentals necessary to complete the work.

**Bid Item No. P24 - REFL PAV MRKG TY I & TY II (W) 4" SOLID**
**Bid Item No. P25 - REFL PAV MRKG TY I & TY II (Y) 4" SOLID**
**Bid Item No. P26 - REFL PAV MRKG TY I & TY II (Y) 4" BROKEN**
**Bid Item No. P28 - REFL PAV MRKG TY I & TY II (W) 24" STOP BAR MARKING**

This item shall consist of installation of reflective pavement markings of the type shown at the locations shown in the drawings. Reflective pavement markings shall be installed in accordance with project specification, details, and notes, including TxDOT Item 666.

Measurement and payment shall be made on the basis of price bid per linear feet (LF) and shall be total compensation for furnishing all materials, tools, equipment, labor, and any other incidentals necessary to complete the work.

**Bid Item No. P27 - REFL PAV MRKG TY I & TY II (W) ARROW**
**Bid Item No. P29 - REFL PAV MRKG TY I & TY II (W) 5' X 8' CROSSWALK WITH 5' SPACE**
**Bid Item No. P30 - REFL PAV MRKG TY I & TY II (W) 24"X 8" CROSSWALK WITH 4' SPACE**
**Bid Item No. P31 - REFL PAV MRKG TY I (W) 24" TRIANGLE**

This item shall consist of installation of reflective pavement markings of the type shown at the locations shown in the drawings. Reflective pavement markings shall be installed in accordance with project specification, details, and notes, including TxDOT Item 666.

Measurement and payment shall be made on the basis of price bid per each (EA) and shall be total compensation for furnishing all materials, tools, equipment, labor, and any other incidentals necessary to complete the work.

**Bid Item No. P32 - REMOVE AND RELOCATE EX GATE**

This item shall consist of removing and relocating existing swing gate at the locations shown in the drawings. Existing gate shall be removed and relocated in accordance with project specification, details, and notes.

Removal and relocation of existing post bollards, gate, gate posts, and gate spots shall be considered subsidiary to this item.

Measurement and payment shall be made on the basis of price bid per each (EA) and shall be total compensation for furnishing all materials, tools, equipment, labor, and any other incidentals necessary to complete the work.

**Bid Item No. P33 - ONCOR DUCT CROSSING COORDINATION**

This item shall consist of the labor, equipment, and materials required for active coordination with Oncor during crossing of duct banks to be installed by others.

This work required for this item may include, but is not limited to:

- Active communication with Oncor of work progress
- Adequate notifications to Oncor of work adjacent to Oncor facilities
- Movement of equipment that may impede Oncor operations
- Protection of in-place work that could be damaged by others
- Constructing leave out of concrete pavement and sidewalk for Oncor to perform duct bank operations

Measurement and payment shall be made on the basis of price bid per lump sum (LS) and shall be total compensation for furnishing all materials, tools, equipment, labor, and any other incidentals necessary to complete the work. Coordination with Oncor and/or other utility companies related to other facilities shall be considered subsidiary to the cost of the project.

**Bid Item No. B1 - FLOWABLE BACKFILL**

This item shall consist of installation flowable backfill at the locations shown in the drawings. Flowable backfill shall be installed in accordance with project specification, details, and notes, including TxDOT Item 401.

Measurement and payment shall be made on the basis of price bid per cubic yard (CY) and shall be total compensation for furnishing all materials, tools, equipment, labor, and any other incidentals necessary to complete the work.

**Bid Item No. B2 - DRILL SHAFT (18 IN)**
**Bid Item No. B3 - DRILL SHAFT (36 IN)**

This item shall consist of construction of drilled shafts of the different sizes at the locations shown in the drawings. Drilled shaft shall be installed in accordance with project specification, details, and notes, including TxDOT Item 416.

Measurement and payment shall be made on the basis of price bid per linear feet (LF) and shall be total compensation for furnishing all materials, tools, equipment, labor, and any other incidentals necessary to complete the work.

**Bid Item No. B4 - CL C CONC (ABUT) (HPC)**

This item shall consist of construction of bridge abutment cap, wingwalls, and backwall at the locations shown in the drawings. Concrete abutment cap, wingwalls, and backwall shall be constructed in accordance with project specification, details, and notes, including TxDOT Item 420.

Measurement and payment shall be made on the basis of price bid per cubic yard (CY) and shall be total compensation for furnishing all materials, tools, equipment, labor, and any other incidentals necessary to complete the work.

**Bid Item No. B5 - REINF CONC SLAB (HPC)**

This item shall consist of construction of bridge reinforced concrete slab at the locations shown in the drawings. Reinforced bridge deck shall be constructed in accordance with project specification, details, and notes, including TxDOT Item 422.

Measurement and payment shall be made on the basis of price bid per square feet (SF) and shall be total compensation for furnishing all materials, tools, equipment, labor, and any other incidentals necessary to complete the work.

**Bid Item No. B6 – BRIDGE SIDEWALK (HPC)**

This item shall consist of construction of bridge sidewalk at the locations shown in the drawings. Bridge sidewalk shall be constructed in accordance with project specification, details, and notes, including TxDOT Item 422.

Measurement and payment shall be made on the basis of price bid per square feet (SF) and shall be total compensation for furnishing all materials, tools, equipment, labor, and any other incidentals necessary to complete the work.

**Bid Item No. B7 - APPROACH SLAB (HPC)**

This item shall consist of construction of bridge approach slab at the locations shown in the drawings. Approach slab shall be constructed in accordance with project specification, details, and notes, including TxDOT Item 422.

Measurement and payment shall be made on the basis of price bid per cubic yard (CY) and shall be total compensation for furnishing all materials, tools, equipment, labor, and any other incidentals necessary to complete the work.

**Bid Item No. B8 - PRESTR CONC I-GIRDER (TX40)**

This item shall consist of installation of prestressed concrete girders at the locations shown in the drawings. Prestressed concrete girders shall be constructed in accordance with project specification, details, and notes, including TxDOT Item 425.

Measurement and payment shall be made on the basis of price bid per linear feet (LF) and shall be total compensation for furnishing all materials, tools, equipment, labor, and any other incidentals necessary to complete the work.

**Bid Item No. B9 - RIPRAP (CONC) (CL B) (RR8&RR9)**

This item shall consist of installation of concrete riprap at the locations adjacent to the bridge as shown in the drawings. Concrete riprap shall be installed in accordance with project specification, details, and notes, including TxDOT Item 432.

Measurement and payment shall be made on the basis of price bid per cubic yard (CY) and shall be total compensation for furnishing all materials, tools, equipment, labor, and any other incidentals necessary to complete the work.

**Bid Item No. B10 - RIPRAP (STONE PROTECTION) (24 IN)**

This item shall consist of installation stone riprap at the locations adjacent to the bridge as shown in the drawings. Stone riprap shall be installed in accordance with project specification, details, and notes, including TxDOT Item 432.

Measurement and payment shall be made on the basis of price bid per cubic yard (CY) and shall be total compensation for furnishing all materials, tools, equipment, labor, and any other incidentals necessary to complete the work.

**Bid Item No. B11 - ELASTOMERIC BEARING (LAMINATED)**

This item shall consist of installation of elastomeric bearing pads at the locations shown in the drawings. Elastomeric bearing pads shall be installed in accordance with project specification, details, and notes, including TxDOT Item 434.

Measurement and payment shall be made on the basis of price bid per each (EA) and shall be total compensation for furnishing all materials, tools, equipment, labor, and any other incidentals necessary to complete the work.

**Bid Item No. B12 - STR STEEL (MISCELLANEOUS BRIDGE) (BS-EJCP)**

This item shall consist of installation of structural steel plate at the locations shown in the drawings. Structural steel shall be installed in accordance with project specification, details, and notes, including TxDOT Item 442.

Measurement and payment shall be made on the basis of price bid per pound (LB) and shall be total compensation for furnishing all materials, tools, equipment, labor, and any other incidentals necessary to complete the work.

**Bid Item No. B13 - RAIL (TY C221) (HPC)**

This item shall consist of construction of combination rail of the type shown at the locations shown in the drawings. Combination rail shall be constructed in accordance with project specification, details, and notes, including TxDOT Item 450.

Measurement and payment shall be made on the basis of price bid per linear feet (LF) and shall be total compensation for furnishing all materials, tools, equipment, labor, and any other incidentals necessary to complete the work.

**Bid Item No. B14 - SEALED EXPANSION JOINT (4 IN) (SEJ - M)**

This item shall consist of installation of sealed expansion joint of the type shown at the locations shown in the drawings. Sealed expansion joint shall be installed in accordance with project specification, details, and notes, including TxDOT Item 454.

Measurement and payment shall be made on the basis of price bid per linear feet (LF) and shall be total compensation for furnishing all materials, tools, equipment, labor, and any other incidentals necessary to complete the work.

**Bid Item No. B15 - MTL BEAM GD FEN TRANS (THRIE-BEAM)**

This item shall consist of installation of metal beam guard fence transition of the type shown at the locations shown in the drawings. Metal beam guard fence transition shall be installed in accordance with project specification, details, and notes, including TxDOT Item 540.

Measurement and payment shall be made on the basis of price bid per each (EA) and shall be total compensation for furnishing all materials, tools, equipment, labor, and any other incidentals necessary to complete the work.

**Bid Item No. B16 - TERMINAL ANCHOR SECTION**

This item shall consist of installation of metal beam guard fence terminal anchor section of the type shown at the locations shown in the drawings. Metal beam guard fence terminal anchor section shall be installed in accordance with project specification, details, and notes, including TxDOT Item 540.

Measurement and payment shall be made on the basis of price bid per each (EA) and shall be total compensation for furnishing all materials, tools, equipment, labor, and any other incidentals necessary to complete the work.

**Bid Item No. D1 - 18" RCP CLASS III**
**Bid Item No. D2 - 24" RCP CLASS III**
**Bid Item No. D3 - 30" RCP CLASS III**

This item shall consist of installation of reinforced concrete pipe of the type and size shown at the locations shown in the drawings. Reinforced concrete pipe shall be installed in accordance with project specification, details, and notes, including TxDOT Item 464.

TV inspection of reinforced concrete pipe shall be considered subsidiary to this item.

Measurement and payment shall be made on the basis of price bid per linear feet (LF) and shall be total compensation for furnishing all materials, tools, equipment, labor, and any other incidentals necessary to complete the work.

**Bid Item No. D4 - 6' CURB INLET**

This item shall consist of construction of curb inlets of the size shown at the locations shown in the drawings. Curb inlets shall be constructed in accordance with project specification, details, and notes, including NCTCOG 702.1.

Measurement and payment shall be made on the basis of price bid per each (EA) and shall be total compensation for furnishing all materials, tools, equipment, labor, and any other incidentals necessary to complete the work.

**Bid Item No. D5 - CONCRETE HEADWALL (CHFW-0)**

This item shall consist of installation of concrete headwall of the type shown at the locations shown in the drawings. Concrete headwall shall be constructed in accordance with project specification, details, and notes, including TxDOT Item 466.

Measurement and payment shall be made on the basis of price bid per each (EA) and shall be total compensation for furnishing all materials, tools, equipment, labor, and any other incidentals necessary to complete the work.

**Bid Item No. D6 - 18" RCP 2:1 SET TY II HEADWALL**

This item shall consist of installation of safety end treatment of the type shown at the locations shown in the drawings. Safety end treatment shall be constructed in accordance with project specification, details, and notes, including TxDOT Item 467.

Measurement and payment shall be made on the basis of price bid per each (EA) and shall be total compensation for furnishing all materials, tools, equipment, labor, and any other incidentals necessary to complete the work.

**Bid Item No. D7 - 18" RCP 6:1 SET TY II HEADWALL**

This item shall consist of installation of safety end treatment of the type shown at the locations shown in the drawings. Safety end treatment shall be constructed in accordance with project specification, details, and notes, including TxDOT Item 467.

Measurement and payment shall be made on the basis of price bid per each (EA) and shall be total compensation for furnishing all materials, tools, equipment, labor, and any other incidentals necessary to complete the work.

## Bid Item No. D8 - 24" RCP 6:1 SET TY II HEADWALL

This item shall consist of installation of safety end treatment of the type shown at the locations shown in the drawings. Safety end treatment shall be constructed in accordance with project specification, details, and notes, including TxDOT Item 467.

Measurement and payment shall be made on the basis of price bid per each (EA) and shall be total compensation for furnishing all materials, tools, equipment, labor, and any other incidentals necessary to complete the work.

## Bid Item No. D9 – RIPRAP (STONE PROTECTION) (12 IN) (CHFW-0 HEADWALL)

This item shall consist of installation stone riprap at the locations adjacent to CHFW-0 headwall as shown in the drawings. Stone riprap shall be installed in accordance with project specification, details, and notes, including TxDOT Item 432.

Measurement and payment shall be made on the basis of price bid per cubic yard (CY) and shall be total compensation for furnishing all materials, tools, equipment, labor, and any other incidentals necessary to complete the work.

## Bid Item No. D10 - TRENCH EXCAVATION PROTECTION (STORM SYSTEM)

This work includes preparing a job specific trench safety plan and installing the proper shoring and/or bracing to adequately provide a safe trench for all storm sewer improvements, in compliance with current regulations and requirements of the United States Department of Labor Occupational Safety and Health Administration (OSHA). The CONTRACTOR shall have a Trench Safety Plan prepared, signed, and sealed by a professional engineer and provided to the ENGINEER prior to the start of construction. The preparation of the trench safety plan, as required by these specifications, will not be paid for directly but shall be considered subsidiary to this pay item.

Measurement and payment for work performed and materials furnished related to the preparation of a trench safety plan and the installation of a trench safety systems, as provided herein, shall be made on the basis of the price bid per linear foot (LF) of trench exceeding a depth of 4-ft and shall be total compensation for furnishing and/or operating all labor, materials, tools, equipment and other incidentals necessary to complete the work.

## Bid Item No. H1 - UNCLASSIFIED POND AND CREEK EXCAVATION

This work consists of all the required excavation within the limits of the right-of-way and adjacent areas to grade detention pond and creek as shown on the plans. All excavation is considered unclassified and shall be performed to the lines & grades shown on the construction plans or as directed by the ENGINEER, in accordance with the appropriate specifications, details and notes, including NCTCOG Item 203.2, 203.4 & 203.5.

This item also includes temporary stockpiling, placement, and compaction of excavated or borrow material required for this project, in accordance with the appropriate specifications. Fill shall be placed and compacted (minimum 95% of maximum dry density) in accordance with the specifications, details, notes, and geotechnical report.

This is a "Plans Quantity" item and will not be measured unless there are revisions to the scope of work. Payment for work performed and materials furnished related to the unclassified excavation and embankment, as provided herein, shall be made on the basis of the price bid per lump sum (LS) for unclassified excavation and shall be total compensation for furnishing and/or operating all labor, materials, tools, equipment and other incidentals necessary to complete the work.

**Bid Item No. H2 - BORROW AND SPOIL (DETENTION POND AND CREEK)**

This work consists of all the require fill within the limits of the right-of-way and adjacent areas to grade the detention pond and creek grading as shown on the plans. All fill is considered unclassified and shall be performed to the lines & grades shown on the construction plans or as directed by the ENGINEER, in accordance with the appropriate specifications, details and notes, including NCTCOG Item 203.2, 203.4 & 203.5.

This item also includes temporary stockpiling, placement, and compaction of excavated or borrow material required for this project, in accordance with the appropriate specifications. Fill shall be placed and compacted (minimum 94% of maximum dry density) in accordance with the specifications, details, notes, and geotechnical report.

This is a "Plans Quantity" item and will not be measured unless there are revisions to the scope of work. Payment for work performed and materials furnished related to the unclassified fill, as provided herein, shall be made on the basis of the price bid per lump sum (LS) for unclassified fill and shall be total compensation for furnishing and/or operating all labor, materials, tools, equipment and other incidentals necessary to complete the work.

**Bid Item No. H3 - BORROW AND SPOIL (DETENTION POND AND CREEK) (SELECT FILL)**

This work consists of all the require select fill within the limits of the right-of-way and adjacent areas to grade bridge and creek grading as shown on the plans. The select fill shall be performed to the lines & grades shown on the construction plans or as directed by the ENGINEER, in accordance with the appropriate specifications, details and notes, including NCTCOG Item 203.2, 203.4 & 203.5.

This item also includes temporary stockpiling, placement, and compaction of excavated or borrow material required for this project, in accordance with the appropriate specifications. Fill shall be placed and compacted in accordance with the specifications, details, notes, and geotechnical report.

This is a "Plans Quantity" item and will not be measured unless there are revisions to the scope of work. Payment for work performed and materials furnished related to the select fill, as provided herein, shall be made on the basis of the price bid per lump sum (LS) for select fill and shall be total compensation for furnishing and/or operating all labor, materials, tools, equipment and other incidentals necessary to complete the work.

**Bid Item No. H4 - RIPRAP (CONC) (CL B) (RR8&RR9) (DETENTION POND)**

This item shall consist of installation of concrete riprap at the locations adjacent to the detention pond and outfall as shown in the drawings. Concrete riprap shall be installed in accordance with project specification, details, and notes, including TxDOT Item 432.

Measurement and payment shall be made on the basis of price bid per cubic yard (CY) and shall be total compensation for furnishing all materials, tools, equipment, labor, and any other incidentals necessary to complete the work.

**Bid Item No. H5 - RIPRAP (STONE PROTECTION) (24 IN) (DETENTION POND)**

This item shall consist of installation stone riprap at the locations adjacent to the detention pond and outfall as shown in the drawings. Stone riprap shall be installed in accordance with project specification, details, and notes, including TxDOT Item 432.

Measurement and payment shall be made on the basis of price bid per cubic yard (CY) and shall be total compensation for furnishing all materials, tools, equipment, labor, and any other incidentals necessary to complete the work.

**Bid Item No. H6 - CONCRETE OUTFALL STUCTURE**

This item shall consist of construction of concrete outfall structure at the detention pond as shown in the drawings. The outfall structure shall be constructed in accordance with project specification, details, and notes, including TxDOT Item 420.

Measurement and payment shall be made on the basis of price bid per cubic yard (CY) and shall be total compensation for furnishing all materials, grates, tools, equipment, labor, and any other incidentals necessary to complete the work.

**Bid Item No. L1 - HYDRAULIC MULCHING WITH 4" TOPSOIL**

This item includes all work, materials and incidentals necessary to restore parkways, yards or other areas that are disturbed to an equal or better condition than prior to construction, in accordance with the appropriate details and specifications, including NCTCOG Item 204. Disturbed areas along the length of the project shall be fine graded and cut to receive hydraulic mulching. A minimum of 4" of topsoil shall be placed to bring the site to grade.

Unless directed otherwise by the engineer, hydraulic mulching shall match the species (minimum of Bermuda sod) that existed prior to construction and/or the species adjacent to the disturbed

area shall be placed in all disturbed areas where improved lawn or established turf existed prior to construction. The contractor will be required to water, fertilize, mow and otherwise maintain restored areas to establish healthy growth, even distribution of vegetation and full coverage over the entire restored area. The contractor shall also maintain and protect these areas from damage and repair any damage that occurs, until completion and final acceptance of the project by the OWNER.

Measurement and payment for parkway and disturbed area restoration work performed and materials furnished complete and in place as provided herein shall be made on the basis of the price bid per square yard (SY) and shall be total compensation for furnishing and/or operating all labor, materials, tools, equipment and other incidentals necessary to complete the work, including watering, fertilizing, mowing and maintenance of the restored areas. Payment shall be made based on the quantity shown in the bid proposal, regardless if the amount installed in order to hydraulic mulching all disturbed areas exceeds the bid quantity. No more than 75% of this item will be paid until 100% turf coverage has been established in all areas disturbed, to the satisfaction of the OWNER.

**Bid Item No. L2 - SEDIMENT CONTROL FENCE (INSTALL/MAINTAIN/REMOVE)**

This item shall consist of installation, maintenance, and removal of sediment control fence at the locations shown in the drawings. Sediment control fence shall be constructed in accordance with project specification, details, and notes, including NCTCOG Item 202.5.

Measurement and payment shall be made on the basis of price bid per linear feet (LF) and shall be total compensation for furnishing all materials, tools, equipment, labor, and any other incidentals necessary to complete the work.

**Bid Item No. L3 - STABILIZED CONSTRUCTION EXIT/ENTRANCE**

This item shall consist of installation, maintenance, and removal of stabilized construction exit/entrance at the locations shown in the drawings. Construction exits/entrances shall be constructed in accordance with project specification, details, and notes, including NCTCOG Item 202.11.

Measurement and payment shall be made on the basis of price bid per square yard (SY) and shall be total compensation for furnishing all materials, tools, equipment, labor, and any other incidentals necessary to complete the work.

**Bid Item No. L4 - INLET PROTECTION (INSTALL/MAINTAIN/REMOVE)**

This item shall consist of installation, maintenance, and removal of inlet protection at the locations shown in the drawings. Inlet protection shall be constructed in accordance with project specification, details, and notes, including NCTCOG Item 202.14.

Measurement and payment shall be made on the basis of price bid per each (EA) and shall be total compensation for furnishing all materials, tools, equipment, labor, and any other incidentals necessary to complete the work.

**Bid Item No. L5 – ROCK CHECK DAM**

This item shall consist of installation, maintenance, and removal of rock check dam at the locations shown in the drawings. Rock check dam shall be constructed in accordance with project specification, details, and notes, including NCTCOG Item 202.9.

Measurement and payment shall be made on the basis of price bid per linear feet (LF) and shall be total compensation for furnishing all materials, tools, equipment, labor, and any other incidentals necessary to complete the work.

**Bid Item No. L6 - STORM WATER POLLUTION PREVENTION PLAN**

This pay item shall consist of furnishing, installing, maintaining and removing erosion controls throughout the duration of the project in accordance with the Texas Commission on Environmental Quality's (TCEQ) permitting procedures and requirements for construction projects that disturb five (5) or more acres. Under the Texas Pollution Discharge Elimination System (TPDES) general construction permit TXR 150000, the operator with control of construction plans and specifications (OWNER) and the operator with day-to-day operational control (CONTRACTOR) are required to obtain a permit for the discharge of storm water runoff. The CONTRACTOR shall be required to prepare and implement a single comprehensive site-specific Storm Water Pollution Prevention Plan (SWP3) for the entire construction site. The CONTRACTOR shall: (1) sign the SWP3, (2) submit an NOI for the Town of Addison & CONTRACTOR if required, and (3) post a site notice as part of the permit. The SWP3 must describe and ensure the implementation of best management practices that will be used to reduce, to the maximum extent possible, the pollutants and storm water discharges associated with the construction activity and ensure compliance with the terms and conditions of the permit. The SWP3 must clearly indicate which operator is responsible for satisfying each shared requirement of the SWP3. The SWP3 shall be subject to approval by the OWNER and must be retained on-site during the term of the construction. Notice must be posted if the SWP3 is retained off-site.

A Texas Registered Professional Engineer must sign and seal the Erosion Control Plan (ECP) submitted as part of the SWP3. The CONTRACTOR shall submit a Notice of Termination for Town of Addison and CONTRACTOR upon completion of the project if required.

This work shall also include the installation and maintenance of, unless specified otherwise:

- Silt fence;
- Rock check dam;
- Stabilized construction entrance;
- Staged inlet protection;
- Any additional erosion control measures required by the SWP3.

Measurement and payment shall be made on the basis of the price bid per lump sum (LS) for preparation and implementation of the SWP3. This includes any necessary revisions to the Erosion Control Plan throughout the term of construction and the installation, sequencing, and maintenance of structural control measures throughout the duration of construction and along its entire stretch. Payment shall be total compensation for furnishing all labor, materials, tools, and equipment necessary to complete the work. Payment shall be evenly prorated throughout the term of construction on a monthly basis, based on amount bid and time bid.

**Bid Item No. W1 - 8" PVC WATER LINE**
**Bid Item No. W2 - 12" PVC WATER LINE**

This work includes the furnishing and installation of 8", and 12" diameter PVC meeting the requirements of AWWA C900, at the locations shown in the plans as per NCTCOG items 501.14, 502, 503, 504, and 506 and the Town of Addison Standard Construction Details. Proposed water line shall comply with AWWA C900. Payment shall include furnishing, hauling and laying of pipe shown on the plans, trench excavation, and backfilling, including embedment material as specified, replacement of topsoil, protecting or replacing existing structures or utilities, testing, disposal of surplus materials, and cleaning up and maintenance. Payment shall include any and all extra precautions or construction requirements necessary to adequately protect and support existing utilities. Payment for the pipelines shall include all costs required to have utility companies repair any damage inflicted to their lines by the CONTRACTOR and any cleanup, property damages, fines, etc. resulting from damage inflicted to any utility line by the CONTRACTOR.

Embedment for water lines shall be per Town of Addison standard construction details.

All fittings associated with the proposed water line installation, as indicated in the plans, shall be considered incidental to this pay item.

This work shall also include the construction of temporary pavement repair necessary for traffic control and detours or as determined by the ENGINEER. Temporary pavement repair shall be constructed and maintained in water line installation areas as indicated in the construction plans that will be open to traffic prior to the construction of the final pavement. Temporary pavement repair, as required by these specifications, will not be paid for directly but shall be considered subsidiary to this pay item.

Measurement and payment shall be made on the basis of price bid per linear foot (LF) measured horizontally and shall be total compensation for furnishing all materials, tools, equipment, labor, and any other incidentals necessary to complete the work, including all excavation, embedment and backfill.

**Bid Item No. W3 - 8 " GATE VALVE**
**Bid Item No. W4 - 12 " GATE VALVE**

This work includes the furnishing and installation of 8", and 12" gate valves as shown on the plans or as determined by the ENGINEER, in accordance with NCTCOG Item 502.6 and the Town of Addison Standard Construction Details and Specifications. These pay items shall be inclusive of all items necessary to complete the installation.

Measurement and payment shall be made on the basis of the price per bid each (EA) and shall be total compensation for furnishing all materials, tools, equipment, labor, and any other incidentals necessary to complete the work, including curb identification markings, valve boxes, all excavation, embedment and backfill necessary to complete the work.

**Bid Item No. W5 - FIRE HYDRANT ASSEMBLY**

This pay item shall consist of the installation of new fire hydrant assemblies including connections and testing of the fire hydrants at locations indicated on the plans and in accordance with NCTCOG Item 502.3 and Town of Addison Construction Details and Specifications. The 6" PVC water line lead from water main to gate valve and the 6" gate valve required for fire hydrant installation are considered subsidiary to this item and shall not be paid for separately.

Fire hydrant assemblies shall be inclusive of all work necessary to install and connect the new fire hydrant to the water line. This includes all fittings, megalugs, water pipe from fire hydrant gate valve and water pipe for stack, blocking, etc. necessary to complete the construction.

Measurement and payment for work performed and materials furnished related to installing the fire hydrant and valve assembly, as provided herein, shall be made on the basis of the price bid per each (EA) and shall be total compensation for furnishing and/or operating all labor, materials, tools, equipment and other incidentals necessary to complete the work, including curb identification markings and any barrel extensions required.

**Bid Item No. W6 - REMOVE EXISTING 12" AC WATER LINE**

This work includes the removal and disposal of the existing 12" Asbestos Concrete Pipe water line at the locations shown in the drawings. The removal of the existing Asbestos Concrete Pipe shall be completed in accordance with NCTCOG Item 604.

Measurement and payment shall be made on the basis of the price per bid linear feet (LF) and shall be total compensation for furnishing all materials, tools, equipment, labor, and any other incidentals necessary to complete the work.

**Bid Item No. W7 - ABANDON EXISTING ASBESTOS PIPE IN PLACE**

The work includes the grouting of existing various diameter water lines for the purpose of abandonment as indicated on the construction plans or a s determined by the ENGINEER, in accordance with TxDOT Special Specification 7076, "Grouting of Water Mains" and NCTCOG Item 604. The CONTRACTOR shall verify that all services, meters, stub-outs, and other branch

water lines supplied from the existing water lines to be abandoned are transferred to other water lines as shown on the construction plans prior to pavement construction.

The existing water lines shall be abandoned as follows:

After each section of the existing water line is taken out of service, the abandoned section shall be completely drained, including pumping water from the system, as necessary.
Place grout/flowable fill using concrete or grout pumps capable of continuous delivery.
Any and all openings into the existing pipe will be closed by use of approved M.J. cast irons caps or plugs and blocking according to the plans, specifications and/or details governing such work.
Existing valves may be used to close the existing system, the pipe on the abandoned side shall not be left open, but shall be plugged and blocked.

Valves stacks shall be removed and backfilled with soil.

All grout/flowable fill shall conform to TxDOT Item 401, "Flowable Backfill" and TxDOT Special Specification 7076, "Grouting of Water Mains".

Existing Asbestos Concrete Pipe shall be handled in accordance with NCTCOG Item 604 and details governing such work.

Measurement and payment for work performed and materials furnished related to abandoning existing water line, as provided herein, shall be made on the basis of the price bid per linear feet (LF) and shall be total compensation for furnishing and/or operating all labor, materials, tools, equipment and other incidentals necessary to complete the work.

**Bid Item No. W8 - WATER TESTING**

This work includes the testing of the water line in accordance with plans, specifications, details, and NCTCOG Item 506.

Measurement and payment shall be made on the basis of the price per bid lump sum (LS) and shall be total compensation for furnishing all materials, tools, equipment, labor, and any other incidentals necessary to complete the work.

**Bid Item No. W9 - TRENCH EXCAVATION PROTECTION (WATER SYSTEM)**

This work includes preparing a job specific trench safety plan and installing the proper shoring and/or bracing to adequately provide a safe trench for all water improvements, in compliance with current regulations and requirements of the United States Department of Labor Occupational Safety and Health Administration (OSHA). The CONTRACTOR shall have a Trench Safety Plan prepared, signed, and sealed by a professional engineer and provided to the ENGINEER prior to the start of construction. The preparation of the trench safety plan, as required by these specifications, will not be paid for directly but shall be considered subsidiary to this pay item.

Measurement and payment for work performed and materials furnished related to the preparation of a trench safety plan and the installation of a trench safety systems, as provided herein, shall be made on the basis of the price bid per linear foot (LF) of trench exceeding a depth of 4-ft and shall be total compensation for furnishing and/or operating all labor, materials, tools, equipment and other incidentals necessary to complete the work.

**Bid Item No. SS1 - 8" PVC SSWR LINE**

This work includes the installation of ASTM D3034 PVC sewer pipe and fittings at the locations and to the grades shown on the plans. Work shall be in accordance with NCTCOG Items 501, 502, 503, 504, 505, 507, 509 and Standard Construction Details. Payment shall include furnishing, hauling and laying of pipe shown on the plans, trench excavation, dry boring under existing utilities if necessary, and backfilling, including embedment material as specified, replacement of top soil, protecting or replacing existing structures or utilities, mandrel pulling, testing, disposal of surplus materials, general clean-up and maintenance. Payment shall include any and all extra precautions or construction requirements necessary to adequately protect and support existing utilities. Payment for the pipelines shall include all costs required to have utility companies repair any damage inflicted to their lines by the CONTRACTOR and any cleanup, property damages, fines, etc. resulting from damage inflicted to any utility line by the CONTRACTOR.

Embedment for sewer lines shall be per NCTCOG standard details, unless otherwise noted.

This item includes submittal of a plan and execution of the approved plan for any necessary bypass pumping.

This work shall also include the construction of temporary pavement repair necessary for traffic control and detours or as determined by the ENGINEER. Temporary pavement repair shall be constructed and maintained in sanitary sewer installation areas as indicated in the construction plans that will be open to traffic prior to the construction of the final pavement. Temporary pavement repair, as required by these specifications, will not be paid for directly but shall be considered subsidiary to this pay item.

Measurement and payment shall be made on the basis of price bid per linear foot (LF), regardless of depth, measured horizontally from center of manhole to center of manhole or cleanout without any deduction for the length of pipe through manholes and shall be total compensation for furnishing all materials, tools, equipment, labor, and any other incidentals necessary to complete the work, including all excavation, embedment and backfill.

**Bid Item No. SS2 - 4' STANDARD MANHOLE**

This work includes the installation of 4’ diameter standard sanitary manholes per NCTCOG item number 502.1 and Town of Addison Construction Details. Payment shall include excavation, castings, reinforcing steel, concrete, backfill, and other materials, and all appurtenances for a complete and functional unit. Both pre-cast and cast-in-place manholes are permitted for this project.

This item includes submittal of a plan and execution of the approved plan for any necessary bypass pumping.

Measurement and payment shall be made on the basis of price bid per each (EA). There is no separate bid item for extra depth of manhole. The contract price shall be the total compensation for the furnishing of all labor, materials, tools, equipment, and incidentals necessary to complete the work, including curb identification markings, earth excavation, disposal of surplus materials and backfill.

**Bid Item No. SS3 - CEMENT STABILIZED SAND ENCASEMENT (MIN. 10% CEMENT/CY)**

This work includes the installation of Cement Stabilized Sand Encasement in the areas shown in the drawings. Work shall completed be in accordance with latest TCEQ requirements.

Unless otherwise noted the cement, stabilized sand shall have a minimum content of 10%, based on loose dry weight volume.

Measurement and payment shall be made on the basis of price bid per linear foot (LF), regardless of depth, and shall be total compensation for furnishing all materials, tools, equipment, labor, and any other incidentals necessary to complete the work.

**Bid Item No. SS4 - SANITARY SEWER CCTV INSPECTION**

This work includes the testing of the TV testing in accordance with plans, specifications, and details.

Cost for additional testing per NCTCOG requirements will not be paid for separately, but should be considered subsidiary to the various items.

Measurement and payment shall be made on the basis of the price per bid lump sum (LS) and shall be total compensation for furnishing all materials, tools, equipment, labor, and any other incidentals necessary to complete the work.

**Bid Item No. SS5 - TRENCH EXCAVATION PROTECTION (SANITARY SEWER IMPROVEMENTS)**

This work includes preparing a job specific trench safety plan and installing the proper shoring and/or bracing to adequately provide a safe trench for all sanitary sewer improvements, in compliance with current regulations and requirements of the United States Department of Labor Occupational Safety and Health Administration (OSHA). The CONTRACTOR shall have a Trench Safety Plan prepared, signed, and sealed by a professional engineer and provided to the ENGINEER prior to the start of construction. The preparation of the trench safety plan, as

required by these specifications, will not be paid for directly but shall be considered subsidiary to this pay item.

Measurement and payment for work performed and materials furnished related to the preparation of a trench safety plan and the installation of a trench safety systems, as provided herein, shall be made on the basis of the price bid per linear foot (LF) of trench exceeding a depth of 4-ft and shall be total compensation for furnishing and/or operating all labor, materials, tools, equipment and other incidentals necessary to complete the work.

**Bid Item No. O1 – OWNER'S CONTIGENCY**

This item will be used at the Owner's discretion to cover any unexpected costs associated with performing the work.

**20.** **SUBSIDIARY WORK:** Any and all Work specifically governed by documentary requirements for the Project, such as conditions imposed by the Plans or these Special Provisions, in which no specific item for bid has been provided for in the Proposal, shall be considered as a subsidiary item of Work, the cost of which shall be included in the various bid items in the Proposal. Costs of CCTV, permits, inspection fees, traffic control, construction staking, surface restoration and cleanup are general items of Work which fall in the category of subsidiary Work. Any repairs or replacement of items damaged during demolition or as a result of new construction will be considered subsidiary. Limits of all Work requiring repair will be determined by the Town of Addison staff or the inspector. Extreme care should be taken during all demolition and construction operations.

**21.** **QUALIFICATION OF BIDS:** The Town of Addison reserves the right to reject any and all Bids, to waive any and all informalities not involving price, time or changes in the Work, and the right to disregard all nonconforming, non-responsive, unbalanced, or conditional Bids. The Town reserves the right to reject the Bid of any Bidder if the Town believes that it would not be in the best interest of the Project to make an award to that Bidder, whether because the Bid is not responsive or the Bidder is unqualified or of doubtful financial ability or fails to meet any other pertinent standard or criteria established by the Town. Discrepancies in the multiplication of units of Work and unit prices will be resolved in favor of the unit prices. Discrepancies between the indicated sum of any column of figures and the correct sum thereof will be resolve in favor of the correct sum.

**To be considered responsive, the apparent two lowest Bidders are required to submit the Statement of Experience per Section BQS "Bidder Qualification Statement" within 5 days.**

The apparent low two Bidders will be notified by the Engineer to request the information.

**AWARD AND EXECUTION OF CONTRACT:** For the purpose of award, each bid submitted shall consist of three parts whereby the correct summation of the products of the estimated quantities shown in the proposal, multiplied by their bid unit prices for the following parts:

**BELLA LANE SOUTH EXTENSION & ALPHA ROAD CONNECTOR**

Bidders must fill bid proposal for all base bids and all additive alternates. The method of Award will be based on the lowest qualified bidder for all base bids plus any combination of the additive alternates depending on the availability of funds.

The Town reserves the right to accept whichever bid is determined to be in the best interest of the public and to reject all bids.

All payments will be based on actual quantities and bid unit prices.

**22.** **EXPLANATION OF CONTRACT TIME:** The term "Contract Time" as used in this Provision will mean the **330** calendar days (approx. 11 months) for substantial completion of the Work of the Contract from the date the Contract was executed. The term "calendar day" as used in this Article will mean every day shown on the calendar. Calendar days will be consecutively counted from commencement of Contract Time (issuance of a Notice to Proceed) regardless of weather, weekends, and holidays, suspensions of Contractor's operations, delays or other events as described herein.

In the event of a catastrophic event (i.e., war, invasion, riot, declared state of emergency, national strike, or other situations as declared by the Town of Addison) directly and substantially affecting the Contractor's operations on the Contract, the Contractor and the Town shall agree as to the number of calendar days to extend the Contract Time. In the event the Contractor and Town are unable to agree to the number of calendar days to extend the Contract Time, the Town shall unilaterally determine the number of calendar days to extend the Contract Time reasonably necessary and due solely to such catastrophic event and the Contractor shall have no right whatsoever to contest such determination, save and except that the Contractor establishes that the number of calendar days determined by the Town were arbitrary or without any reasonable basis.

Should the Contractor fail to complete the Contract on or before expiration of the Allowable Contract Time, as adjusted in accordance with the special provisions No. 78 of liquidated damage, the Town shall deduct from the moneys due the Contractor the Daily Value for each calendar day completion exceeds the Allowable Contract Time. The term "Allowable Contract Time" as used in this Article shall mean the Original Contract Time plus adjustments pursuant to the statements above. This deduction shall be the disincentive for the Contractor's failing to timely complete the Contract. **This shall be strictly enforced.**

**23.** **COPIES OF PLANS FURNISHED:** One (1) copy of 24" x 36" and one (1) electronic copy of the Plans shall be furnished to the successful Contractor, at no charge, for construction purposes.

**24.** **PRE-CONSTRUCTION CONFERENCE:** The successful Contractor, Engineer, and Town of Addison shall meet for a pre-construction conference before any of the Work begins on this Project. At this time, details of sequencing of the Work, contact individuals

for each party, testing requirements, submittals, traffic control, time sensitive completion of the project and pay requests will be covered. Prior to the meeting, the Contractor shall prepare schedules showing the sequencing and progress of their Work and its effect on others. A final composite schedule will be prepared during this conference to allow an orderly sequence of Project construction.

**Prior to the start of construction, Contractor shall video the construction area and property adjacent to construction in the presence of the City Inspector. The format shall be DVD. The video shall be narrated. The Contractor shall furnish the Town of Addison a copy of the video in DVD format prior to commencement of Project. This shall be subsidiary to Project.**

**25.** **MOBILIZATION:** Mobilization and Demobilization includes the movement of all labor, equipment and supplies, establishment of facilities necessary for work, and other work and operations which must be performed and cost no directly attributable to other pay items, excluding bidding costs, which must be incurred in order to enable the Contractor to begin work on other contract items. And this item incudes all work for removing all equipment and supplies and project site cleanup.

Payment

- Partial Payments of the Lump Sum bid for Mobilization shall be limited as follows:
- When 1% of the *adjusted contract amount is earned, 50% of the Mobilization Lump Sum or 5% of the total contract amount shall be paid, whichever is less. Previous payments under this item will be deducted from this amount.
- When 5% of the *adjusted contract amount is earned, 75% of the Mobilization Lump Sum or 10% of the total contract amount shall be paid, whichever is less. Previous payments under this item will be deducted from this amount.
- When 10% of the *adjusted contract amount is earned, 100% of the Mobilization Lump Sum or 10% of the total contract amount shall be paid, whichever is less. Previous payments under this item will be deducted from this amount.
- When all work under the contract is completed by the Contractor and accepted by the Town, 100% of the Mobilization Lump Sum will be paid

**26.** **GENERAL SEQUENCE OF CONSTRUCTION:** Prior to the start of Work, the Contractor shall develop a detailed construction and sequence of construction schedule using the critical path method (CPM) and submit to the Town of Addison and Engineer for approval. The CPM shall reflect all definable features of Work and activities that shall cause minimum interference with traffic along, across and adjacent to the Project during construction. If the schedule or sequence becomes unworkable or unsatisfactory as Work proceeds, adjustments shall be made. During all phases of construction access to all existing businesses must be maintained at all times unless otherwise authorized in writing

by the Town of Addison. Erosion control devices must be properly installed and maintained during all stages of construction.

1. The project schedule shall be prepared using Microsoft Project, Primavera P6 or other as approved by the OWNER. Electronic files in the scheduling software native format and PDF copies shall be included with all schedule submittals.
2. The Original Project Schedule submitted prior to construction and approved by the OWNER shall become the basis for measuring progress and evaluating whether the project is on schedule (Baseline schedule for the project). Once approved by the OWNER, the Original Project Schedule shall not be changed.
3. There shall be at a minimum one schedule Activity for each major bid item in the proposal. Many bid items will need to consist of multiple Activities.
4. The length of this project is such that many Activities or Sets of activities will be repeated for various stages of construction and segments of the roadway. Any repeated Activity must clearly identify the location and/or stage of construction.
5. The schedule must be based on clearly defined Activities, phases of construction and any project milestones. Schedule limits must be easily field verified.
6. All Activities must have Predecessor and Successor activities (except start and finish milestones). Independent or open-ended activities shall not be included.
7. The schedule must clearly identify relationship between Predecessor and Successor activities as “start-to-start”, “start-to-finish”, or “finish-to-finish”.
8. Negative lag times shall not be permitted.
9. Activities with a duration of twenty days or greater shall be broken into sub-activities. (For example, if the activity for “Install Water Line A” has a duration of 21 days, is should be divided into sub-activities such as “Install Water Line A, Sta 0+00 to 15+00”, etc.)
10. Monthly schedule updates shall include actual start and completion dates for completed and ongoing Activities. Original Project Schedule dates must be shown for tracking purposes.
11. For activities behind schedule, a Recovery Plan must be submitted detailing how project will be brought back within schedule. This may include such measures as adding work crews, leasing additional equipment, or engaging subcontractors. Fragnets or copies of the revised schedule reflecting proposed changes shall be used to document proposed plan revisions and their schedule impacts. Any additional costs resulting from Recovery Plan measures shall be at the contractor’s sole expense.
12. Activity durations reflected in the original schedule cannot be reduced without a Recovery Plan description reflecting what additional resources or actions will implemented justifying the schedule change.

The Contractor must comply with all work area restrictions as indicated in the Plans unless specifically authorized in writing by the Town of Addison.

**27.** **PROJECT REPRESENTATIVE:** The Town of Addison, the Engineer, the Contractor(s), and any applicable public utilities shall designate a single individual within

their organization to act as liaison for the Project. This individual shall be aware of the day to day activities on the Project, have authority to make decisions binding on the party, and serve as single point for coordination of activities with the other team members. The Contractor's representative must be available to meet and discuss construction related issues on site or at the Town's offices within 20 minutes of a request during working hours and throughout the entire construction period. Upon repeated failure of attendance at requested meetings, Contractor will be required to have a Project representative on-site at all times.

**28.** **COORDINATION WITH OTHERS:** In the event that other Contractors are doing Work in the same area simultaneously with this Project, the Contractor shall coordinate his proposed construction with that of the other Contractors. The Town of Addison and/or the Engineer shall mediate any disputes, and the Contractors shall comply with their decisions.

**29.** **INSURANCE:** Each insurance policy that the Contractor must furnish in accordance with these contract documents shall name the Town of Addison and the Engineer as additional insured. Contractor shall include in their bid package, a copy of their certificate of insurance showing compliance to the limits established by the Town of Addison.

1.0 The Contractor shall agree to furnish and maintain continuously during the period of this agreement, any renewals or extension, insurance coverage meeting all of the following requirements:

1.1 Commercial General Liability Insurance at minimum combined single limits of $1,000,000 per occurrence and $2,000,000 general aggregate for Bodily Injury and Property Damage, which coverage shall include Products/Completed Operations, and XCU Hazards. Coverage for product/completed operations must be maintained for at least two (2) years after the construction Work has been completed. Coverage must be amended to provide for an each-project aggregate limit of insurance. Contractual Liability must be included.

1.2 Workers Compensation Insurance at statutory limits, including employer's liability coverage at minimum limits of $1,000,000 each occurrence-each accident, $1,000,000 by disease-each occurrence and $1,000,000 by disease aggregate

1.3 Commercial Automobile Liability Insurance at minimum combined single limits of $1,000,000 per occurrence for bodily injury and property damage, including owned, non-owned, and hired car coverage.

1.4 Umbrella Liability at minimum limits of $1,000,000 each-occurrence $4,000,000 aggregate with respect to primary commercial general liability, automobile liability and employer's liability policies.

1.5 Any Subcontractor(s) hired by the Contractor shall maintain insurance coverage equal to that required by the Contractor. It is the responsibility of the Contractor to assure compliance with this provision. The Town accepts no responsibility arising from the conduct, or lack of conduct, of the Subcontractor.

1.6 A comprehensive general liability insurance form may be used in lieu of a commercial general liability form. In this event, coverage must be written on an occurrence basis, at limits of $1,000,000 each-occurrence, combined single limit and coverage must include a broad form comprehensive general liability endorsement, products/completed operations, XCU hazards and contractual liability.

2.0 With reference to the foregoing insurance requirements, Contractor shall specifically endorse applicable insurance policies as follows:

2.1 The Town shall be named as an additional insured with respect to general liability and automobile liability.

2.2 All liability policies shall contain no cross liability exclusions or insured versus insured restrictions.

2.3 A waiver of subrogation in favor of the Town of Addison shall be contained in the workers compensation and all liability policies.

2.4 All insurance policies shall be endorsed to require the insured to immediately notify the Town of Addison of any material changes in the insurance coverage.

2.5 All insurance policies shall be endorsed to the effect that the Town will receive at least thirty (30) days notice prior to cancellation or non-renewal of the insurance.

2.6 All certificates shall be mailed to Town of Addison, Purchasing Dept., P.O. Box 9010, Addison, Texas 75001 or emailed to purchasing@addisontx.gov.

2.7 All insurance policies, which name the Town as an additional insured, must be endorsed to read as primary coverage regardless of the application of other insurance.

2.8 Required limits may be satisfied by any combination of primary and umbrella liability insurances.

2.9 Contractor may maintain reasonable and customary deductibles, subject to approval by the Town.

3.0 All insurance shall be purchased from an insurance company who meets the following requirements:

3.1 Must be issued by a carrier, which is rated "A-" VII or better by A.M. Best's Key Rating Guide.

3.2 Licensed and admitted to do business in the State of Texas and is a subscriber to the Texas Guaranty Fund.

4.0 All insurance must be written on forms filed with and approved by the Texas State Board of Insurance. Certificates of insurance shall be prepared and executed by the insurance

company or its authorized agent and shall contain provisions representing and warranting the following:

4.1 Set forth all endorsements and insurance coverages according to requirements and instruction contained herein.

4.2 Shall specifically set forth the notice-of-cancellation or termination provisions to the Town.

5.0 Upon request, Contractor shall furnish the Town of Addison with certified copies of all insurance policies.

**WORKERS' COMPENSATION INSURANCE COVERAGE:**

A. Definitions.

**Certificate of Coverage** ("certificate") - A copy of a certificate of insurance, a certificate of authority to self insure issued by the Texas Workers' Compensation Commission (the "TWCC"), or a coverage agreement (TWCC-81, TWCC-82, TWCC-83 or TWCC-84), showing statutory workers' compensation insurance coverage for the person's or entity's employees providing services on a Project, for the duration of the Project.

**Duration of the Project** - includes the time from the beginning of the Work on the Project until the Contractor's/person's Work on the Project has been completed and accepted by the governmental entity.

**Persons Providing Services on the Project** ("Subcontractor" in Section 406.096 of the Texas Labor Code) - includes all persons or entities performing all or part of the services the Contractor has undertaken to perform on the Project, regardless of whether that person contracted directly with the Contractor and regardless of whether that person has employees. This includes, without limitation, independent Contractors, Subcontractors, leasing companies, motor carriers, Town-operators, employees of any such entity or employees of any entity which furnishes persons to provide services on the Project. "Services" include, without limitation, providing, hauling, or delivering equipment or materials, or providing labor, transportation, or other service related to a Project. "Services" does not include activities unrelated to the Project, such as food/beverage vendors, office supply deliveries, and delivery of portable toilets.

B. The Contractor shall provide coverage, based on property reporting of classification codes and payroll amounts and filing of any coverage agreement, which meets the statutory requirements of Texas Labor Code, 401.011(44) for all employees of the Contractor providing services on the Project, for the duration of the Project.

C. The Contractor must provide a certificate of coverage to the Town of Addison prior to being awarded the contract.

D. If the coverage period shown on the Contractor's current certificate of coverage ends during the duration of the Project, the Contractor must, prior to the end of the coverage

period, file a new certificate of coverage with the Town of Addison, showing that the coverage has been extended.

E. The Contractor shall obtain from each person providing services on the Project, and provide to the Town of Addison:

(1) a certificate of coverage, prior to that person beginning Work on the Project, so that the Town of Addison will have on file certificates of coverage showing coverage for all persons providing services on the Project; and,

(2) no later than seven days after receipt by the Contractor, a new certificate of coverage showing extension of coverage, if the coverage period shown on the current certificate of coverage ends during the duration of the Project;

F. The Contractor shall retain all required certificates of coverage on file for the duration of the Project and for one year thereafter.

G. The Contractor shall notify the Town of Addison in writing by certified mail or personal delivery, within 10 days after the Contractor knew or should have known, of any change that materially affects the provision of coverage of any person providing services on the Project.

H. The Contractor shall post on each Project site a notice, in the text, form and manner prescribed by the TWCC, informing all persons providing services on the Project that they are required to be covered, and stating how a person may verify current coverage and report failure to provide coverage.

I. The Contractor shall contractually require each person with whom it contracts to provide Services on a Project to:

(1) provide coverage, based on proper reporting of classification codes and payroll amounts and filing of any coverage agreements, which meets the statutory requirements of Texas Labor Codes 401.011 (44) for all its employees providing services on the Project, for the duration of the Project;

(2) provide to the Contractor, prior to that person beginning Work on the Project, a certificate of coverage showing that coverage is being provided for all employees of the person providing services on the Project, for the duration of the Project;

(3) provide the Contractor, prior to the end of the coverage period, a new certificate of coverage showing extension of coverage, if the coverage period shown on the current certificate of coverage ends during the duration of the Project;

(4) obtain from each person with whom it contracts, and provide to the Contractor;

a. a certificate of coverage, prior to the other person beginning Work on the Project; and,

b. a new certificate of coverage showing extension of the coverage period, prior to the end of the coverage period, if the coverage period shown on the current certificate of coverage ends during the duration of the Project.

(5) retain all required certificates of coverage on file for the duration of the Project and for one year thereafter;

(6) notify the Town of Addison in writing by certified mail or personal delivery, within 10 days after the person knew or should have known, of any change that materially affects the provision of coverage of any person providing services on the Project; and

(7) contractually require each other person with whom it contracts to perform as required by paragraphs (1) - (7) with the certificate of coverage to be provided to the person for whom they are providing services.

J. By signing this contract or providing or causing to be provided a certificate of coverage, the Contractor is representing to the Town of Addison that all employees of the Contractor who will provide services on the Project will be covered by worker's compensation coverage for the duration of the Project, that the coverage will be based on proper reporting of classification codes and payroll amounts, and that all coverage agreements will be filed with the appropriate insurance carrier or, in the case of a self-insured, with the TWCC's Division of Self-Insurance Regulation. Providing false or misleading information may subject the Contractor to administrative penalties, criminal penalties, civil penalties or other civil actions.

K. The Contractor's failure to comply with any of these provisions is a breach of contract by the Contractor which entitles the Town of Addison to declare the contract void if the Contractor does not remedy the breach within ten days after receipt of notice of breach from the Town.

The following is the form of notice of workers' compensation coverage prescribed by the TWCC. Pursuant to Section 110.110 (d) (7), this notice must be printed with a title in at least 30-point bold type, and text in at least 19-point nominal type, and shall be in both English and Spanish and any other language common to the worker population.

**REQUIRED WORKERS' COMPENSATION COVERAGE**

"The law requires that each person working on this site or providing services related to this construction Project must be covered by workers' compensation insurance. This includes persons providing, hauling or delivering equipment or materials, or providing labor or transportation or other service related to the Project, regardless of the identity of their employer or status as an employee.

"Call the Texas Workers' Compensation Commission (TWCC) at (512) 440-3789 to receive further information on the legal requirements for coverage, to verify whether your employer has provided the required coverage, or to report an employer's failure to provide coverage."

**30.** **RESOLUTION OF DISPUTES:** The parties hereby covenant and agree that in the event of any controversy, dispute, or claim, of whatever nature arising out of, in connection with or in relation to the interpretation, performance or breach of this Contract, including but not limited to any claims based on contract, tort or statute, before filing a lawsuit, the parties agree to submit the matter to Alternative Dispute Resolution pursuant to the laws of the State of Texas. The parties shall select a third party arbitrator or mediator from the current list of neutrals on file with the Alternative Dispute Resolution Administrator of the Dallas County District Courts or other mutually agreeable mediator or arbitrator. All forms of Alternative Dispute Resolution may be used except binding arbitration. The proceedings shall be conducted in accordance with the laws of the State of Texas.

**31.** **SHOP DRAWINGS:** The Contractor shall provide, review, approve and submit all shop drawings, product data and samples required by the Town of Addison, the Engineer and the Contract Documents in accordance with Item 1.28 of the Standard Specifications for Public Works Construction, North Central Texas Council of Governments. The Contractor shall electronically submit shop drawing for review to Kimley-Horn, who will review, comment and forward to the Town of Addison for acceptance.

Shop drawings shall include all items to be installed in the Project, including but not limited to:

| | | |
|---|---|---|
| □ Concrete Mix Designs | □ Traffic Control Plan | □ Water Main Pipe/Fitting |
| □ Storm Sewer Pipe | □ Bridge Superstructure | □ Valves & Boxes |
| □ Rock Riprap | □ Manholes & Vaults | □ Backfill Materials |
| □ Sanitary Sewer Pipe/Fitting | □ Metal Beam Guard Fence | □ Handrail Shop Drawings |

**32.** **PROJECT VIDEO:** Prior to the start of construction, Contractor shall video the construction area and property adjacent to construction in the presence of the City Inspector. The format shall be DVD. The video shall be narrated. The Contractor shall furnish the Town of Addison a copy of the video in DVD format prior to commencement of Project. This effort shall be considered as subsidiary to the various bids items for this Project (See Section 19).

**33.** **SAMPLES AND TESTS OF MATERIALS:** The Town of Addison shall designate and pay an independent testing laboratory to furnish testing for this Project. Random testing will be provided by the independent lab as necessary for compliance with the Specifications. The Contractor shall coordinate construction with the testing lab and the Town of Addison, and shall provide assistance to the testing labs by providing excavation, access, trench safety, materials for testing and any other Work required to insure all testing requirements are met. Work performed to accommodate testing will be a subsidiary item and no extra payment will be authorized. All costs for the field quality control testing shall be paid for by the Town of Addison, except for any and all re-testing, which shall be paid by the Contractor and such cost shall be deducted from monthly pay requests. As a guide, the Contractor shall be responsible for providing any test required by the Specifications.

All samples and tests shall be performed in accordance with the Standard Specifications for Public Works Construction, North Central Texas Council of Governments (5th Addition) as amended or supplemented.

**34.** **INSPECTION:** The Town of Addison and the Engineer reserve the right to inspect, test, measure or verify the construction Work for this Project as they deem necessary to ascertain that the Work is being accomplished in accordance with the standards and requirements set forth in the Contract Documents. Notwithstanding such reviews, the Contractor will be held responsible for the finished Work and any acceptance of the Work by the Town or governmental agencies will not relieve the Contractor from responsibility for the Work. The Town reserves the right to place full-time construction inspectors at the site of the Work. Costs for inspection services will be paid by the Town of Addison. The Contractor shall provide assistance to the Town of Addison and the Engineer by providing excavation, trench safety, or other Work necessary to facilitate inspection activities, and shall give sufficient notice well in advance of pending construction activities for scheduling of inspection services.

If the Specifications, the Town's instructions, laws, ordinances, or any public authority require any Work to be specially tested, the Contractor shall give the Town timely notice of its readiness for testing, and if the testing is by an authority other than the Town, of the date fixed for such testing. Tests by the Town shall be made promptly, and where practicable at the source of supply.

**35.** **ACCESS ROUTES, STAGING AREAS AND STORAGE AREAS:** All haul roads and access routes and the location of job site trailers, staging areas, and storage areas shall be subject to the approval of the Town and the Engineer. The Contractor shall be responsible for obtaining a staging area for storage of equipment and materials and for employee parking. The Contractor is responsible for maintaining and repairing all roads and other facilities used during construction. Upon completion of the Project all existing roads and other disturbed areas shall be left in a condition equal to that at the time the Contractor commences Work on this Project.

**36.** **PROPERTY ACCESS:** Access to adjacent commercial property shall be maintained at all times unless otherwise directed by the Engineer and/or Town of Addison. Contractor shall also maintain sufficient access throughout the Project limits to the existing buildings and businesses during construction operations.

**37.** **PLANT, PROCEDURES, METHODS AND EQUIPMENT:** The Contractor shall determine the methods to be employed, the procedures to be followed, and equipment to be used on the Work under this contract, subject to the requirements of these Specifications and approval of the Engineer and Town of Addison. Only adequate and safe procedures, methods and equipment shall be used.

The Contractor shall so arrange his Work and provide such plant and equipment as is necessary in order to meet the progress requirements of the approved time schedule and to complete the Work within the period of time as specified in the Contract. Only such

materials and equipment as are necessary for the construction of the Work under this contract shall be placed, stored or allowed to occupy any space at the site of the Work.

It is expressly agreed that the acceptance or approval of any order of procedure, methods or equipment submitted or employed by the Contractor shall not in any manner relieve the Contractor of responsibility for the safety, maintenance and repairs of any Work, or for the construction maintenance and safety of the Work hereunder, or from any liability whatsoever on account of any procedure or method employed by the Contractor.

Where the Work under this contract requires permits from the Town of Addison, the State of Texas, or other public authorities, duplicate copies of such permits shall be furnished to the Engineer by the Contractor before the Work covered thereby is started. **NO WORK WILL BE ALLOWED TO PROCEED BEFORE REQUIRED PERMITS ARE OBTAINED AND DISTRIBUTED.**

**38.** **PARKING OF CONSTRUCTION EQUIPMENT:** During all other periods of time when the Contractor's or their sub-contractors equipment is not being actively used on the construction Work, the Contractor shall park the equipment at locations which are approved by the Town of Addison. The Contractor shall provide adequate barricades, markers and lights to protect the Town of Addison, the Engineer, the public and other Work. All barricades, lights, and markers must meet the requirements of the Town of Addison, State and Federal regulations.

**39.** **ZONING REQUIREMENTS:** During the construction of this Project, the Contractor shall comply with the present zoning requirements of the Town of Addison in the use of vacant property for storage purposes.

**40.** **IN PUBLIC ROADS AND PRIVATE DRIVES:** No public road shall be entirely closed overnight, unless approved by the Town of Addison. It shall be the responsibility of the Contractor to build and maintain all weather bypasses and detours, if necessary, and to properly light, barricade and mark all bypasses and detours that might be required on and across the roads involved in the Work included in this Contract.

The Contractor shall make every effort to complete construction and allow immediate access to adjacent property at driveway entrances located along the roadways. Towns or tenants of improvements where access and/or entrance drives are located shall be notified at least twenty-four (24) hours prior to the time the construction will be started at their driveways or entrances and informed as to the length of time driveways will be closed. Contractor shall at all times maintain at least one point of access into all properties, unless obtaining written permission from property owner to do otherwise with such written permission being provided to the Town's inspector.

The Contractor shall be responsible for all road and entrance reconstruction and repairs and maintenance of same for a period of two years from the date of Town of Addison's acceptance of the Work. In the event the repairs and maintenance are not made immediately to the satisfaction of the Town, and it becomes necessary for the Town to make such repairs, the Contractor shall reimburse the Town for the cost of such repairs.

The Contractor shall, at all times, keep a sufficient width of the roadway clear of dirt and other material to allow the free flow of traffic. The Contractor shall assume any and all responsibility for damage, personal or otherwise, that may be caused by the construction along roads and private drives.

**41.** **HAULING ON TOWN OF ADDISON STREETS:** The Contractor shall receive approval of its haul routes and type of equipment to be used prior to beginning construction. The Contractor shall be responsible for maintaining the cleanliness of existing paved roadways and shall provide equipment and manpower for that purpose.

**42.** **EXISTING POWER POLES & GUY WIRES:** The Contractor shall have the responsibility of coordinating with the proper authorities for the bracing, replacing or relocating of all utility poles and guy wires which interfere with the Work on this Project prior to beginning its construction operations. The Contractor will also be responsible for all damage to poles, guy wires, etc. that are damaged or destroyed by Contractor's operations.

**43.** **SAFETY RESTRICTIONS - WORK NEAR HIGH VOLTAGE LINES:** The contractor is responsibly for the site safety of the project. Contractor shall follow governing regulatory requirements when working near high voltage lines, including but not limited to, OSHA 1926 and Town of Addison requirements.

**44.** **PROTECTION OF EXISTING UTILITIES AND STRUCTURES:** The location and dimensions shown on the Plans relative to existing utilities and subsurface structures are based on the best records and/or field information available and are not guaranteed by the Town of Addison or the Engineer to be accurate as to location and depth. It shall be the Contractor's responsibility to verify locations of adjacent and conflicting utilities sufficiently in advance of its activities in order that he may negotiate such restrictive locations with the Town of Addison of the conflicting utility and/or make local adjustments to provide adequate clearances. The Contractor shall take all necessary precautions in order to protect all utilities and services encountered, whether or not they are indicated on the Plans. All damage to utilities resulting from Contractor's operations shall be restored at its expense. The Town of Addison and the Engineer assume no responsibility for failure to show any or all of these utilities or structures on the Plans, or to show them in their exact locations. It is mutually agreed that such failure shall not be considered sufficient basis for claims for additional compensation for Extra Work or for increasing the pay quantities in any manner whatsoever, unless the obstruction encountered is such as to necessitate changes in the lines or grades, or requires the building of special Work, provisions for which are not made in the Plans, in which case, provisions in these Specifications for Extra Work shall apply.

**45.** **PUBLIC UTILITIES AND OTHER PROPERTY TO BE CHANGED:** In case it is necessary to change or move the property of a public utility, such property shall not be moved or interfered with until authorized by the Town of Addison or the Engineer. The right is reserved for the Owner of public utilities to enter upon the limits of the Project for the purpose of making such changes or repairs of their property that may be made necessary by performance of the Contract. The Contractor shall be responsible for coordination with

the Town of Addison and the Engineer, and all utility companies whose utility lines or streets may be affected by the proposed improvements. The Contractor shall observe the following:

a. Prior to any excavation, the Contractor shall determine the locations of all existing water, gas, sewer, electric, telephone, telegraph, television, pipelines and other underground utilities and structures.

b. After commencing Work, the Contractor shall use every precaution to avoid interference with existing underground and surface utilities and structures, and protect them from damage.

c. Where the locations of existing underground and surface utilities and structures are indicated, these locations are generally approximate, and all items which may be encountered during the Work are not necessarily indicated. The Contractor shall determine the exact locations of all items indicated, and the existence and locations of all items not indicated.

d. The Contractor shall repair or pay for all damage caused by its operations to all existing utility lines, public property, and private property, whether it is below ground or above ground, and he shall defend and settle in total the cost of all lawsuits which may arise as a result of its operations.

e. To avoid unnecessary interferences or delays, the Contractor shall coordinate all utility removals, replacements and construction with the appropriate utility company, and then request written authorization from the Town of Addison or the Engineer. The Town of Addison and the Engineer will not be liable for damages due to delay as a result of the above.

**46.** **MAINTENANCE AND REPAIRS:** The Contractor shall maintain and keep in good repair all Work contemplated under these Plans, Specifications, and Plans which shall include the maintenance and repair of all existing streets, storm sewer crossings, utility crossings, temporary crossings for access to adjacent property, barricades, lights, and danger signals, and all Work which is necessary for the well-being of the general public. In the event the Contractor fails in its obligations to properly maintain the Work, the Town of Addison shall make such repairs as are necessary and the cost of such repairs shall be deducted from payment due the Contractor.

**47.** **PROTECTION OF WORK:** During performance and up to date of final acceptance, the Contractor shall be under the absolute obligation to protect the finished Work against damage, loss or injury. In the event of damage, loss or injury, the Contractor shall promptly replace or repair such Work, whichever the Town of Addison shall determine to be preferable. The obligation to deliver finished Work in strict accordance with the contract prior to final acceptance shall be absolute and shall not be affected by the Town of Addison's approval of or failure to prohibit means and methods of construction used by the Contractor. All risk of loss or damage to the Work shall be borne solely by the

Contractor until final acceptance of all Work by the Town of Addison, as evidenced by the Town of Addison's issuance of a certificate of acceptance.

**48.** **PUBLIC CONVENIENCE AND SAFETY:** In accordance with generally accepted construction practices, the Contractor shall be solely and completely responsible for conditions of the Project site, including safety of all persons and property during performance of the Work. This requirement shall apply continuously and not be limited to normal Work hours.

Materials stored about the Work site shall be so placed, and the Work shall at all times be so conducted, as to cause no greater obstruction to the traveling public than is considered necessary by the Town of Addison. The materials excavated shall be placed so as not to endanger the Work or prevent free access to all fire hydrants, water valves, gas valves, manholes (telephone, telegraph or electrical conduits, and sanitary sewers) and fire alarm or police call boxes in the vicinity.

The Town of Addison reserves the right to remedy any neglect on the part of the Contractor as regards to the public convenience and safety which may come to the Town of Addison's attention, after 24 hours notice in writing to the Contractor, save in cases of emergency, when the Town of Addison shall have the right to remedy any neglect without notice; and, in either case, the cost of such Work done by the Town of Addison shall be deducted from the monies due or to become due the Contractor. The Contractor shall notify the Town of Addison and the Engineer when any street is to be closed or obstructed. The Contractor shall provide for emergency vehicle access at all times.

Where the Work passes over or through private property, the Town of Addison shall provide such right-of-way. The Contractor shall notify the proper representatives of any public utility, corporation, company or individual, not less than 48 hours in advance of Work which might damage or interfere with the operation of their property along or adjacent to the Work. The Contractor shall be responsible for all damage or injury to property of any character (except such as may be required by the provisions of the Contract Documents, or caused by agents or employees or the Town of Addison) by reason of any negligent act or omission on the part of the Contractor, its employees, agents or Subcontractors, or at any time due to defective Work or materials, or due to its failure to reasonably or properly prosecute the Work, and said responsibility shall not be released by the fact that the Work shall have been completed and accepted.

When and where any such damage or injury is done to public or private property on the part of the Contractor, he shall restore or have restored at its own cost and expense such property to a condition similar or equal to that existing before such damage was done, by repairing, rebuilding or otherwise restoring as he may be directed, or he shall make good such damage or injury in a manner acceptable to the property Town of Addison and the Engineer. In case of failure on the part of the Contractor to restore such property or make good such damage or injury, the Town of Addison may, upon 48 hour written notice under ordinary circumstances, and without notice when a nuisance or hazardous condition results, proceed to repair, rebuild or otherwise restore such property as may be determined

necessary, and the cost thereof shall be deducted from any monies due or to become due to the Contractor under this contract; or where sufficient contract funds are unavailable for this purpose, the Contractor or its surety shall reimburse the Town of Addison for all such costs.

**49.** **PROTECTION OF PERSONS AND PROPERTY**: The Contractor shall have the responsibility to provide and maintain all warning devices and take all precautionary measures required by law or otherwise necessary to protect the Work and persons and property while said persons or property are approaching, leaving or within the Work site or any area adjacent to said Work site. No separate compensation shall be paid to the Contractor for the installation or maintenance of any protective measures, warning devices, barricades, lights, signs, or any other precautionary measures required by law or otherwise necessary for the protection of persons or property.

The Contractor shall assume all responsibilities to the general public in connection with the general public's immediate approach to and travel through the Work site and the area adjacent to said Work site.

Where the Work is in or adjacent to any street, alley, sidewalk, public right-of-way or public place, the Contractor shall at its own cost and expense provide such flagmen and watchmen and furnish, erect and maintain such warning devices, barricades, lights, signs, and other precautionary measures for the protection of persons or property as may be prudent or necessary, or as required by law. The Contractor's responsibility for providing and maintaining flagmen, watchmen, warning devices, barricades, signs and lights and other precautionary measures shall not cease until the Project shall have been completed and accepted by the Town of Addison, and shall cease when the Town of Addison notifies the Contractor in writing of final Project acceptance.

If the Town of Addison discovers that the Contractor has failed to comply with applicable federal or state laws (by failing to furnish the necessary flagmen, warning devices, barricades, lights, signs or other precautionary measures for the protection of persons or property), the Town of Addison may order the Contractor to take such additional precautionary measures as required by law to protect persons and property. In addition, the Contractor shall be held responsible for all damages to the Work and other public or private property due to the failure of warning devices, barricades, signs, lights or other precautionary measures in protecting said property; and whenever evidence is found of such damage, the Town of Addison may order the damaged portion immediately removed and replaced by and at the cost and expanse of the Contractor.

**50.** **TRAFFIC CONTROL:** It shall be the responsibility of the Contractor to provide traffic control during the construction as required by the State of Texas, the Town of Addison, and in accordance with the following additional requirements:

a. The Contractor shall be required to furnish barricades, flares, flagmen, etc., for the protection of the public, employees and the Work.

b. The Contractor shall prosecute its Work in such a manner as to create a minimum of interruption to traffic along adjacent roadways.

c. The unit price bid under the appropriate bid item of the proposal shall cover all cost for providing signage, markings, lighting, barricades, flagmen and other devices and personnel required for traffic control during construction of the Project.

d. The Contractor shall not remove any regulatory sign, instructional sign, warning sign, street name sign or any other sign or signal which currently exists.

e. **The Contractor shall provide a comprehensive Traffic Control Plan to the Town of Addison for review, comment, and approval.** In the event the planned sequence of work is different in any way from that sequence of work provided for in the plans or where additional details are required to be reviewed and approved by Addison prior to any further work is performed. The Traffic Control Plan shall be designed in accordance with established standards and regulations and signed and sealed by a professional engineer, registered in the State of Texas. The plan should reflect the Contractor's proposed construction phasing and methodology and include the design layout for all proposed detour and traffic situations. This effort is paid by lump sum in bid item A-31.

**51. BARRICADES, WARNING SIGNS, DETOURS AND SEQUENCE OF CONSTRUCTION:** Throughout the construction operations, streets and intersections will remain open to traffic by constructing the Work in stages. All streets, driveways, adjacent business and alleys shall remain open to traffic as far as is practicable.

A. General Construction: The Contractor shall plan its Work sequence in a manner that will cause minimum interference with aircraft operations during construction operations. Before beginning Work on this Project, the Contractor shall submit, for approval by the Town of Addison, a plan of construction operations outlining in detail a sequence of Work to be followed; setting out the method of handling traffic on streets, roads and driveways along, across and adjacent to the Work. If at any time during the construction, the Contractor's proposed plan of operation for handling traffic does not provide for safe comfortable movement, the Contractor shall immediately change its operations to correct the unsatisfactory conditions.

Ditches across the traffic lanes will be kept covered with a portable traffic-bearing surface at all times unless Work in the ditch is in progress. Only one lane of traffic may be closed at a time when Work is in progress in a ditch.

B. Safety: The Contractor shall provide, construct and maintain barricades and signs at locations set out in the Plans and in the Special Provisions in accordance with the Texas Manual on "Uniform Traffic Control Devices for Streets and Highways". In addition, he shall provide and maintain such other barricades and signs as deemed necessary by the Town or the Engineer, and provide and maintain, between sunset and sunrise, a sufficient number of lights at barricades and points of danger for the protection of vehicular and pedestrian traffic.

Barricades shall be placed in such a manner as not to interfere with the sight distance of drivers entering the street from side streets.

The Contractor shall keep traveled surfaces used in its hauling operation clear and free of dirt or other material.

The Contractor shall provide and maintain qualified flagmen at such points and for such periods of time as may be required to provide for the safety and convenience of public travel and Contractor's personnel.

## 52. EXCAVATION SAFETY SYSTEMS:

The Work performed under this section of the Specifications consists of providing trench safety systems consisting of shoring, sheeting, trench shield, and/or laid back slopes to meet the trench safety requirements of the Occupational Safety and Health Administration (O.S.H.A.), as required for this Project and specified herein.

A. General: Trench safety systems shall be provided by the Contractor as provided in Subpart P - Excavation, Trenching and Shoring, Part 1926 of the Code of Federal Regulations which describes safety and health regulations as administered by the U.S. Department of Labor Occupational Safety and Health Administration (O.S.H.A.). The standards specified by the O.S.H.A. Regulations shall be the minimum allowed on this Project. It shall be the responsibility of the Contractor to design and install adequate trench safety systems for all trenches excavated on this Project.

The Contractor shall furnish to the Town for review, prior to beginning construction activity, a Trench Safety Plan for the entire Project. The trench safety plan must be prepared and sealed by a Professional Engineer registered in the State of Texas. In addition, all trench safety systems utilized in this Project must be designed by a Professional Engineer registered in the State of Texas. The Contractor shall be totally responsible for the safety of all persons involved in the construction of this Project.

B. Core Borings: Any core borings and soil data furnished by the Town are for the convenience of the Contractor. The Contractor shall be responsible for any additional soil or geotechnical information required. The Contractor shall be responsible for properly designed trench safety systems to be utilized for any type of subsurface condition found on this Project. The furnishing of soil information by the Town of Addison in no way relieves the Contractor of this obligation. If no core borings or soil data are furnished by the Town, it shall be the Contractor's responsibility to obtain whatever geotechnical information required for preparation of trench safety systems.

C. Inspections: In addition to the inspections of the trench and trench safety systems required of the Contractor by the O.S.H.A. Regulations, the Town may further inspect the Work. The Town shall have the right to reject any trench safety systems which he finds to be inadequate, and the Contractor shall immediately improve the system to comply with this specification.

D. Measurement and Payment: Measurement and payment of Trench Safety Systems shall be based on the actual linear footage of the pipe installed on the Project. The payment shall be full compensation for all planning, engineering, materials, equipment, fabrications, installation, recovery and all incidental Work required.

**53.** **TRENCH EXCAVATION, BACKFILL AND COMPACTION:** Trench excavation, backfill and compaction of water and sewer utility trenches shall be in accordance with Town of Addison Standards and with details shown on the Construction Plans.

A. Trench Excavation: If the stated maximum trench widths are exceeded, either through accident or otherwise, and if the Engineer determines that the design loadings of the pipe will be exceeded, the Contractor will be required to support the pipe with an improved trench bottom. The expense of such remedial measures shall be entirely the Contractor's own. All trenching operations shall be confined to the width of permanent rights-of-way, permanent easements and any temporary construction easements. All excavation shall be in strict compliance with the Trench Safety Systems Special Condition of this document.

B. Trench Backfill: Trenches shall be backfilled above the top of the embedment material with approved backfill material per Town of Addison Standards for the appropriate pipe size, pipe material, depth, and soil condition.

C. Compaction: All trenches under proposed or existing pavement shall be compacted to within a range of 95% to 100% Standard Proctor Density. Trenches which lie outside limits of pavement shall be compacted to a minimum of 90% Standard Proctor Density (ASTM D-698).

**54.** **TRENCH WALLS:** The Contractor shall use shoring or a drag box in those areas where it is required to protect existing improvements. This shall be subsidiary to the linear foot cost of the pipe and not a separate pay item.

**55.** **SUSPENSION OF WORK RELATED TO DANGER:** In addition to the other remedies for suspension of the Work as provided for in the General Provisions and Special Provisions, the Town of Addison has the authority to suspend all work immediately if, in the Town of Addison's opinion, there is imminent danger to workers or the general public. If there is no imminent danger to workmen or the general public, but trench conditions are not in compliance with Federal Regulations 29 C.F.R. 1926.650-1926.652, the Town of Addison shall warn the Contractor who shall then immediately order all workmen in and adjacent to the trench away from the area. The Contractor must then bring the trench into compliance with the regulations. If the Contractor does not make the required corrections, all work on the Contract shall cease and the Town of Addison will issue a letter of Temporary Suspension of Work. The only work authorized after issuance of this letter is work approved by the regulations. Other work shall not be permitted until the Town of Addison issues a letter of Release of Temporary Suspension of Work. The Contractor shall not be entitled to additional compensation, an extension of time or payment of damages as a result of a temporary suspension of work under this provision.

**56.** **PROPERTY LINES AND MONUMENTS:** The Contractor shall protect all property corner markers, and when any such markers or monuments are in danger of being disturbed, they shall be properly referenced and if disturbed shall be reset at expense of the Contractor.

**57.** **CONSTRUCTION STAKING:** Construction staking will not be provided by the Town of Addison or Engineer. This item will be performed by the Contractor and shall be subsidiary to other bid items. The Contractor will also be responsible for maintaining stakes. If re-staking is required for any reason, it will be the Contractor's responsibility, including associated costs.

All construction staking shall be done under the supervision of a Registered Professional Land Surveyor registered in the State of Texas. The Contractor shall submit copies of cut sheets and field books for the construction of all paving, water, wastewater, and stormwater improvements to the Town of Addison for review prior to construction of the improvements. The information on the cut sheets and field books shall include but not be limited to the following:

a. Heading to include date, contract number, Project name, surveying firm, Contractor, and construction plan sheet number.

b. Location, description of street/line and street/line name, number, letter, etc. designation.

c. Benchmark Data: Location, description, and elevation.

d. Slope or percent of grade of each curb line or utility line.

e. Stations at 50 foot intervals and including all PC, PT, PI, PVC, PVI, PVT, PRC, grade changes, etc.

f. Offset description including distance to center line or back of curb and direction of offset; left, right, east, west, etc,

g. Cut to subgrade, pavement, top of curb, or flowline of the street or utility being staked.

h. Clarifying remarks such as top of curb, gutter, pavement, subgrade, manhole, cleanout, valve, tee, cross, fire hydrant, wastewater lateral, water service, etc.

i. Cut sheets shall be signed by a Texas Registered Professional Land Surveyor.

**58.** **DURING CONSTRUCTION**: During construction of the Work, the Contractor shall, at all times, keep the site of the Work and adjacent premises as free from material, debris and rubbish as is practicable and shall remove same from any portion of the site if, in the opinion of the Town of Addison or the Engineer, such material, debris or rubbish constitutes a nuisance or is objectionable. In case of failure on the part of the Contractor to maintain a clean site, the Town of Addison may, upon 24 hour written notice, clean the site, and the cost thereof shall be deducted from any monies due or to become due to the

Contractor under its contract; or where sufficient contract funds are unavailable for this purpose, the Contractor or its surety shall reimburse the Town of Addison for all such costs.

**59.** **CONSTRUCTION TRAFFIC OVER PIPE LINES:** The design of the new pipes and the design of the existing pipe have been taken into account and provided for highway live loads. It is apparent, however, that certain construction vehicles could exceed this highway load condition under shallow bury conditions. It will be the responsibility of the Contractor to protect both the new line and the existing lines from these possibly excessive loads. The Contractor shall not at any time cross the existing or new pipe with a truck delivering new pipe to the site. Any damage to the existing or new pipe will be repaired or replaced by the Contractor to the satisfaction of the Town of Addison.

In locations where it is not permissible to cross the existing or proposed pipes without additional protection, the Contractor may elect to provide additional protection of the pipes, such as steel plates, so that more frequent crossings of the pipes are allowed. It still is, however, the responsibility of the Contractor to repair any damage to the existing or proposed lines if the damage results from any phase of its construction operation.

**60.** **CONTRACTOR'S CONTINUING OBLIGATION:** Contractor's obligation to perform and complete the Work in accordance with the Contract Documents shall be absolute. Neither recommendation of any progress or final payment by the Town of Addison, nor the issuance of a certificate of Substantial Completion, nor any payment by Town of Addison to Contractor under the Contract Documents, nor any use or occupancy of the Work or any part thereof by Town of Addison, nor any act of acceptance by Town of Addison nor any failure to do so, nor any review and approval of a Shop Drawing or sample submission, nor the issuance of a notice of acceptability by the Town of Addison pursuant to final payment nor any correction of defective Work by Town of Addison will constitute an acceptance of Work not in accordance with the Contract Documents or a release of Contractor's obligation to perform the Work in accordance with the Contract Documents.

**61.** **IRRIGATION AND SPRINKLER REPAIR:** The Contractor shall maintain all existing irrigation systems within the limits of the Project during the duration of the contract, if necessary. The Contractor shall employ a licensed irrigator who is responsible for the repair or replacement of any damage to irrigation lines, valves, controllers, sprinklers, wiring and appurtenances which are damaged during construction. **This repair is subsidiary to the various other items bid. The Contractor will be responsible for any vegetation that dies as a result of damage to the irrigation system and replace it with equal vegetation at its own cost.**

**62.** **REMOVAL OF DEFECTIVE AND UNAUTHORIZED WORK:** All Work which has been rejected or condemned shall be repaired; or if it cannot be repaired satisfactorily, it shall be removed and replaced at the Contractor's expense. Defective materials shall be immediately removed from the Work site. Work done without line and grade having been provided; Work done beyond the line or not in conformity with the grades shown on the Plans or as provided, Work done without proper inspection; or any Extra or unclassified Work done without written authority and prior agreement in writing as to prices, shall be at the Contractor's risk and will be considered unauthorized, and at the option of the Town

of Addison may not be measured and paid for and may be ordered removed at the Contractor's expense. Upon failure of the Contractor to repair satisfactorily or to remove and replace, if so directed, rejected, unauthorized or condemned Work or materials immediately after receiving notice from the Town of Addison, the Town will, after giving written notice to the Contractor, have the authority to cause defective Work to be remedied or removed and replaced, or to cause unauthorized Work to be removed and to deduct the cost thereof from any monies due or to become due the Contractor.

**63.** **DISPOSITION AND DISPOSAL OF MATERIALS:** All materials to be removed from the site including refuse and other debris shall become the property of the Contractor and shall be disposed of outside the limits of the Project. Contractor shall also comply with all applicable laws governing the spillage of debris while transporting to a disposal site.

**64.** **CLEAN-UP FOR FINAL ACCEPTANCE:** The Contractor shall make a final cleanup of all parts of the Work before acceptance by the Town of Addison. This cleanup shall include removal of all objectionable rock and other construction materials, and in general preparing the site of the Work in an orderly manner and appearance.

**65.** **TV INSPECTION OF SANITARY SEWER/STORM SEWER:** Part of the final inspection of the wastewater systems on this Project shall include a closed circuit TV survey of the completed pipe installation, exclusive of services, and all imperfections in the installed facility revealed by the TV survey shall be remedied by the Contractor prior to acceptance of the Project as complete. All TV survey Work, including furnishing of necessary personnel, equipment and material shall be performed by the Contractor.

**66.** **TESTING REQUIREMENTS:** Testing shall be conducted in accordance with Town of Addison Specifications except as modified in the Special Provisions, Technical Specifications, or as on the plans. The Town of Addison will provide random testing. The Contractor shall coordinate construction with the Town of Addison, and shall provide assistance to the testing labs by providing trench safety, excavation, or other work to insure all testing requirements are met. Work performed to accommodate testing will be a subsidiary item and no extra payment will be authorized. All retesting shall be at the expense of the Contractor. As a general guide, the Contractor shall be responsible for providing the following tests:

(1) Density and associated tests on embedment and backfill.
(2) Compressive strength tests on concrete.
(3) Gradation soil tests on backfill as may be required.
(4) Pressure test, bacteriological tests for disinfection of water lines,
(5) Mandrel test for gravity sewer pipeline
(6) Vacuum test for SSMH for water tightness.
(7) Providing test results from manufacturer and as specified in Town of Addison Specifications (NTCOG).

**67.** **SILICONE JOINT SEALANT:** Silicone joint sealant must be used in all instances where joint sealant applies to Portland Cement Concrete pavement and curbs. Payment for the

use of silicone joint throughout this Project will in all cases be subsidiary to this contract at no extra cost.

**68.** **CLAIMS FOR DAMAGES OR INJURY:** General Provision Item 1.24.3 - SMALL CLAIMS FOR DAMAGE OR INJURY is amended to read as follows: "If any person files a claim against the Town of Addison or Contractor for personal injury or property damage resulting from, arising out of, or caused by, the operations of the Contractor, or any Work within the limits of the Project, the Contractor must either submit to the Town of Addison, a duly executed full release within thirty (30) days from the date of written claim, or immediately report the claim to its liability insurance carrier for their action in adjusting the claim. If the Contractor fails to comply with this provision within the stipulated time limit, it will be automatically deemed that the Contractor has appointed the Town as it's irrevocably Attorney-In-Fact authorizing the Town to report the claim directly with the liability insurance carrier. This provision is in and of itself a Power-of-Attorney from the Contractor to the Town which authorizes the Town to take said action on behalf of the Contractor without the necessity of the execution of any other document. If the Contractor fails to comply with the provisions of this item the Town, at its own discretion, may terminate this contract or take any other actions it deems appropriate. Any payment or portion thereof due the Contractor, whether it is a final payment, progress payment, payment out of retainage or refund payment may be withheld by the Town as is authorized by Item 109.4. Bankruptcy, insolvency or denial of liability by the insurance carrier shall not exonerate the Contractor from liability.

As a result of the additional Work created to Town of Addison due to un-responded claims for damages by Contractor to third parties, Contractor shall incur penalties for failure to abide by this Special Provision.

Contractor shall respond to the claimant in writing regarding the status of the claim, including whether Contractor disputes the claim, wishes to settle, or will notify its liability insurance carrier regarding the claim. Contractor will be assessed a penalty by the Town of $75.00 per claim, for its failure to respond to the claimant as described above within thirty days of its written notice of claim by the Town.

To ensure Contractor compliance, the Town of Addison shall be notified, by copied correspondence of responses or settlement by Contractor."

**69.** **WAIVER OF CLAIMS:** The making and acceptance of final payment will constitute:

A. A waiver of all claims by Town of Addison against Contractor, except claims arising from unsettled Liens, from defective Work appearing after final inspection or failure to comply with the Contract Documents or the terms of any special guarantees specified therein; however, it will not constitute a waiver by Town of Addison of any rights in respect of Contractor's continuing obligations under the Contract Documents.

B. A waiver of all claims by Contractor against Town of Addison other than those previously made in writing and still unsettled.

**70.** **MECHANICS AND MATERIALMEN'S LIEN:** The Contractor shall be required to execute a release of mechanics and materialmen's liens upon receipt of payment and shall ensure that the Project remains free and clear of all liens related to the Work. The Contractor shall have all liens removed by obtaining releases acceptable to the Town of Addison or shall bond around such liens by obtaining a discharge of all liens.

**71.** **CONTRACTOR'S AFFIDAVIT OF BILLS PAID:** The Contractor shall be required to execute the form provided in Section BP prior to the acceptance of the Project.

**72.** **PRODUCT RECORD DOCUMENTS:** The Contractor shall maintain record Plans and legibly annotate shop drawings to record changes made after review. A red felt-tip marking pen shall be used for all recording.

Maintenance of Documents: The Contractor shall maintain at the job site one record copy of the Contract Plans, Specifications, Shop Drawings, Change Orders, other modification to the Contract, field test records and other documents submitted by Contractor in compliance with specification requirements. These documents shall be maintained at the job site apart from documents used for construction. These documents are not to be used for construction purposes. The documents shall be maintained in clean, legible condition. The documents shall be made available at all times for inspection by the Town.

Recording: Each document shall be labeled Project Record Copy in 2-inch high printed letters. The record documents shall be kept current. No Work shall be covered until required information has been recorded.

Contract Plans: The appropriate drawing shall be legibly marked to record, where applicable:

a. Horizontal and vertical location of underground utilities and appurtenances referenced to permanent surface improvements.

b. Field changes of dimension and detail made during construction process.

c. Changes made by Change Order or Supplemental Agreement.

d. Details not on original Contract Plans.

e. Manufacturer, trade name, catalog number and supplier of each product and item of equipment actually installed.

f. Changes made by Change Order or Supplemental Agreement.

g. Other matters not originally specified.

Shop Drawing: The Contractor shall maintain the Shop Drawings as record drawings and legibly annotate shop drawings to record changes made after review.

Submittal: At the completion of the Project, the Contractor shall deliver record Plans to the Town. The transmittal letter shall be accompanied, in duplicate, with:

a. Date, Project title and number.

b. Contractor's name and address.

c. Title and number of each record document.

d. Certification that each document as submitted is complete and accurate.

e. Signature of Contractor or its authorized representative.

**73. OWNERSHIP OF WORK AND MATERIALS:** All Work performed by Contractor pursuant to the Contract shall be the property of the Town of Addison. The Town of Addison shall own all construction, and any data, documents, plans, specifications, working papers, computer programs, photographs, or other material produced by Contractor pursuant to the Contract, and Contractor hereby assigns and transfers to the Town of Addison any and all copyrights for such material. To the extent that such programs used are internal, proprietary programs used by Contractor in the performance of the Work, Contractor will provide the Town of Addison such access to the programs as is necessary for the Town of Addison to be able to use the products and documents generated by the program, but Contractor is not required to transfer the copyrights or other intellectual property rights to the program to the Town of Addison. As security for partial, progress, or other payments, title to work for which such payments are made shall pass to the Town of Addison at the time of the payment. To the extent that title has not previously been vested in the Town of Addison by reason of payments, full title shall pass to the Town of Addison at delivery of the Work at the location specified in the Contract.

Unincorporated Work to which the Town of Addison has received title by reason of progress, partial or other payments shall be segregated from other Contractor or Subcontractor materials and clearly identified as the Town of Addison property. The Contractor shall be responsible for all materials until they have been incorporated into the Work and the Work has been finally accepted by the Town of Addison. The title transferred as above shall in each case be good, and free and clear of any and all security interests, liens, or other encumbrances. The Contractor promises and agrees that it will not pledge, hypothecate, or otherwise encumber the items in any way that would result in any lien, security interest, charge, or claim upon or against said items. The transfer of title as provided above shall not imply acceptance by the Town of Addison, nor relieve Contractor from the responsibility to strictly comply with the Contract, and shall not relieve Contractor of responsibility for any loss of or damage to such items.

The Contractor shall insert provisions in its subcontracts sufficient to ensure compliance with the content of this Section.

**74. DRAWINGS AND OTHER DATA:** All documents developed by Contractor in the performance of the Contract shall become the sole property of the Town of Addison and may be used by the Town of Addison on any other project without additional compensation

to Contractor. Use by the Town of Addison of these documents on other projects does not confer any liability on Contractor.

The Town of Addison shall be considered the "person for whom the work was prepared" for the purpose of authorship in any copyrightable work under 17 U.S.C. § 201(b). With respect thereto, Contractor agrees not to assert or authorize others to assert any rights or establish any claim under the design related patent and copyright laws. All design drawings, as-built drawings and specifications, in any form, shall contain a copyright mark of the Town of Addison.

**75.** **TOWN OF ADDISON APPROVAL:** This Project is subject to final approval and acceptance by the Town of Addison. Final approval acceptance will not be given until the punch list items are completed to the Town's satisfaction and as-built Plans are given to the Town of Addison.

**76.** **USE OF EXPLOSIVES:** The use of explosives by the Contractor to complete the Work shall be prohibited.

**77.** **POWER FOR CONSTRUCTION:** The Contractor shall contract with the local power provider and make the necessary arrangements for securing power required for the construction, including power required for temporary offices. There will be no separated pay item for connection into the existing power system or for the power required for construction purposes.

**78.** **LIQUIDATED DAMAGES:** If the Contractor fails to complete the Work within the time specified in the contract, the Contractor shall pay liquidated damages to the Town of Addison in the amount of **$ 1,000** for each calendar day of delay until the Work is completed or accepted.

**79.** **CONTRACT DELAY:** The parties anticipate that delays may be caused by or arise from any number of events during the course of the Contract, including, but not limited to, Work performed, disruptions, permitting issues, actions of subcontractors, suppliers, or other contractors, actions by third parties, weather, weekends, holidays, or other such events, forces or factors sometimes experienced in construction work. Such delays or events and their potential impacts on performance by the Contractor are specifically contemplated and acknowledged by the parties in entering into this Contract, and shall not extend the Contract time for completion. Further, any and all costs or impacts whatsoever incurred by the Contractor in accelerating the Work to overcome or absorb such delays or events in an effort to complete the Contract prior to expiration of the Contract time to complete, regardless of whether the Contractor does so or not, shall be the sole responsibility of the Contractor in every instance.

**80.** **SUBCONTRACTORS:** No subcontract shall relieve Contractor of any of Contractor's obligations or liabilities under the Contract. Contractor shall be fully responsible and liable for the acts or omissions of all Subcontractors, including persons directly or indirectly employed by them, their guests and invitees. Contractor shall have sole responsibility for managing and coordinating the operations of its Subcontractors, including the settlement

of disputes with or between them. Nothing contained in the Contract shall be deemed to create a contractual relationship between any Subcontractor, and the Town of Addison.

Contractor shall provide to the Town of Addison one (1) copy of all executed subcontracts associated with the Contract, including any changes or modifications to the subcontracts, within three (3) days of their execution. No Subcontractor shall be permitted to perform work associated with the subcontract until the Subcontractor (or Contractor on the Subcontractor's behalf) is in compliance with the insurance requirements specified elsewhere in the Contract, and has furnished satisfactory evidence of insurance to the Town of Addison.

**81.** **PAYMENTS TO SUBCONTRACTORS:** Contractor shall comply with the provisions of applicable laws and regulations relating to Contractor's relations with Subcontractors. Payments by Contractor to Subcontractors associated with the Town of Addison Contracts are subject to the time periods established in the Texas "Prompt Payment Act", contained in Chapter 2251 of the Texas Government Code.

All persons employed in the performance of the Work under the Contract, or any subcontracts hereunder, shall be paid not less than the general rates of per diem, holiday, and overtime wages prevailing in the locality of the Work of a similar character as detailed in the Special Provisions. Failure to comply with this provision shall subject Contractor to the penalties prescribed in Chapter 2258 of the Texas Government Code, as amended.

Contractor will include in each subcontract for property or services entered into by Contractor and a Subcontractor, including a supplier, for purposes of performing the Work under the Contract a payment clause that obligates Contractor to pay the Subcontractor for satisfactory performance under its subcontract within seven (7) days out of such amounts as are paid to Contractor by the Town of Addison under the Contract. A false certification to the Town of Addison under the provisions of the Payments clause may be a principal offense in violation of Section 37.10 of the Texas Penal Code.

**82.** **USE OF COMPLETED PORTIONS OF THE WORK:** Whenever, as determined by the Town of Addison, any portion of the Work performed by Contractor is in a condition suitable for use, and the best interests of the Town of Addison requires such use the Town of Addison may take possession of or use such portion of the Work. Such use by the Town of Addison shall in no case be construed as final acceptance, and shall neither relieve Contractor of any of its responsibilities under the Contract, nor act as a waiver by the Town of Addison of any of the conditions thereof. Contractor shall not be liable for the cost of repairs, rework, or renewals, which may be required due to ordinary wear and tear resulting from such use. However, if such use increases the cost or delays the completion of remaining portions of the Work, Contractor shall notify the Town of Addison in writing as required by the Contract and shall be entitled to such additional compensation or extension of time, or both, as determined in accordance with the Contract.

If in the course of such use, the Work proves to not be in compliance with the Contract, the Town of Addison shall have the right to continue such use until such portion of the Work can, without injury to the Town of Addison, be taken out of service for correction of

defects, errors, omissions, or replacement of unsatisfactory materials, as necessary for such portions of the Work to comply with the Contract. Contractor shall correct the Work as soon as practical, but not later than one (1) month after notification by the Town of Addison.

Contractor shall not use any permanently incorporated materials unless such use is approved in writing by the Town of Addison. Where Contractor's request is granted for the use of certain materials, Contractor shall properly use and maintain and, upon completion of its use and at its own expense, recondition such materials to the satisfaction of the Town of Addison.

**83.** **COMPLETE AGREEMENT:** The Contract (including Attachments, the Special Provisions, other documents and manuals incorporated herein) is the full and complete agreement between the Town of Addison and Contractor with respect to the subject matter herein and supersedes any and all prior agreements between the parties hereto.

**84.** **WAIVER:** The waiver by the Town of Addison of the breach of any provision of the Contract by Contractor shall in no way impair the right of the Town of Addison to enforce the provision for any subsequent breach thereof. All remedies provided hereunder are cumulative and are in addition to all other remedies available at law or in equity.

**85.** **EXECUTION OF THE CONTRACT:** The Contract may be executed in multiple counterparts, each of which shall, for all purposes, be deemed an original but which together shall constitute one and the same instrument, and the signature pages from any counterpart may be appended to any other counterpart to assemble fully executed documents, and counterparts of the Contract may also be exchanged via electronic facsimile machines and any electronic facsimile of any party's signature shall be deemed to be an original signature for all purposes.

**86.** **DEFINITIONS:** The following definitions are added to the General Provisions and Special Provisions:

**BIDDER**: Any person, persons, partnership, company, firm, association, or corporation acting directly or through a duly authorized representative submitting a bid for the work contemplated.

**PROJECT**: The Town of Addison's overall objective and endeavor of which the Contract forms a part and ultimately creates, which encompasses all Contact Documents constructed to final completion and final acceptance.

**TOWN ENGINEER (ENGINEER):** Town Engineer or his/her authorized representative with the Town of Addison located at 16801 Westgrove Drive, Addison, Texas 75001.

**CONSULTANT ENGINEER (DESIGN ENGINEER):** The consultant engineer of record is Brian J. LaFoy, PE (Texas Registered PE #89363 with Kimley-Horn and Associates, Inc. located at 2201 West Royal Lane, Suite 275, Irving, Texas 75063.

**WORKING DAY**: A working day is defined as a calendar day not including Saturdays, Sundays, or legal holidays authorized in the list prepared by the City of Dallas for contract purposes, in which weather or other conditions not under the control of the Contractor shall permit the performance of the principal units of work underway for a continuous period of not less than 7 hours between 7 A.M. and 6 PM. A principle unit of work shall be that unit which controls completion time of the contract. Nothing in this definition shall be construed as prohibiting the Contractor from working on Saturdays, if the Contractor so desires and permission of the Town of Addison has been granted. Work on Sundays shall not be permitted except in cases of extreme emergency and then only with the written permission of the Town of Addison. If Saturday or Sunday work is permitted, working time shall be charged on the same basis as weekdays. Where the working time is expressed as calendar days or a specific date, the concept of working days shall no longer be relevant to the contract.

**87.** **MODIFICATIONS TO THE LANGUAGE OF THE GENERAL PROVISIONS:** The General Provisions are modified as follows:

A. Add the following words to the General Provisions before the word "Certificates" found on the fourth line of Section 103.4.1:

"When permitted by law,"

B. Delete the sentence "A model Certificate of Insurance is illustrated in Model Form A.6 in Appendix A." beginning on the ninth line of Section 103.4.1 of the General Provisions and replace with the following:

"Certificates of Insurance shall be provided on a state approved form."

C. Delete the following sentence beginning on the second line of the fifth subparagraph of Section 104.2.1 of the General Provisions:

"The foregoing notwithstanding, the total original Contract amount shall not be increased more than 25 percent; the CONTRACTOR, by submission of a bid and execution of the Contract, is deemed to consent to the OWNER'S right to reduce the total original Contract amount by more than 25 percent."

D. Add the following word before the word "decide" found on the second line of Section 105.7.1 of the General Provisions:

"initially"

E. Add the following word after the word "work" found on the fifth line of Section 105.7.1 of the General Provisions:

", subject to the agreement of the Owner"

F. Delete the following sentence beginning on the sixth line of Section 105.7.1 of the General Provisions:

> "Engineer shall determine the amount and quality of work performed and materials furnished, and Engineer's decision and estimates shall be final."

G. Delete Section 105.9.3 of the General Provisions titled "Inspection Overtime" in its entirety.

H. Delete Section 107.2 of the General Provisions titled "Indemnification" in its entirety and replace with the following:

> **"THE CONTRACTOR AGREES TO INDEMNIFY, SAVE, PROTECT, DEFEND, AND HOLD HARMLESS THE OWNER, ITS AFFILIATES AND THEIR OFFICERS, DIRECTORS, AGENTS, INVITEES, AND EMPLOYEES ("INDEMNIFIED PARTIES") FROM AND AGAINST ANY AND ALL LIABILITY, COST, DAMAGE, EXPENSES, FINES AND ALL REASONABLE LEGAL FEES AND COURT COSTS, CLAIMS, LOSSES, CAUSES OF ACTION, SUITS, AND LIABILITY OF ANY KIND, INCLUDING ALL EXPENSES OF LITIGATION AGAINST THE INDEMNIFIED PARTIES, WHETHER OR NOT CAUSED IN PART BY ANY ACT OR OMISSION OF A PERSON OR ENTITY INDEMNIFIED HEREUNDER, OR WHETHER LIABILITY IS IMPOSED UPON SUCH PERSON OR ENTITY, FOR ANY LOSS, INJURY, DAMAGE OR DEATH ARISING FROM OR OUT OF THE CONTRACTOR'S ACTS OR OMISSIONS, INCLUDING, BUT NOT LIMITED TO CONTRACTOR'S NEGLIGENT OR GROSSLY NEGLIGENT PERFORMANCE OF THE WORK; NEGLIGENT OR GROSSLY NEGLIGENT USE OR MISUSE OF OWNER'S PROPERTY; NEGLIGENT OR INTENTIONAL ACTIONS, ERRORS OR OMISSIONS AND THOSE OF ITS EMPLOYEES, OFFICERS, DIRECTORS, AGENTS OR SUBCONTRACTORS; VIOLATION OF ANY FEDERAL, STATE OR MUNICIPAL LAWS, REGULATIONS AND/OR ORDINANCES; CONTRACTOR'S OR ITS SUBCONTRACTOR'S USE OF PROPERTY, EQUIPMENT, VEHICLES, OR MATERIALS; DEFECTIVE WORKMANSHIP; NEGLIGENT OR GROSSLY NEGLIGENT USE OR MISUSE OF UTILITIES; OR SUBCONTRACTORS', EMPLOYEES', AGENTS', OFFICERS', OR DIRECTORS' NEGLIGENCE OR INTENTIONAL TORTS. IT IS THE EXPRESS INTENT OF CONTRACTOR TO INDEMNIFY THE INDEMNIFIED**

**PARTIES FROM THE CONSEQUENCES OF THEIR JOINT AND/OR CONCURRENT NEGLIGENCE AND/OR SOLE NEGLIGENCE. IN THE EVENT OF FAILURE BY THE CONTRACTOR TO FULLY PERFORM IN ACCORDANCE WITH THIS INDEMNIFICATION PARAGRAPH, EACH OF THE INDEMNIFIED PARTIES, AT ITS OPTION, AND WITHOUT RELIEVING CONTRACTOR OF ITS OBLIGATIONS HEREUNDER, MAY SO PERFORM, BUT ALL COSTS AND EXPENSES SO INCURRED BY ANY OF THE INDEMNIFIED PARTIES IN THAT EVENT SHALL BE REIMBURSED BY CONTRACTOR TO THE INDEMNIFIED PARTIES, OR ANY OF THEM, AND UNTIL REIMBURSED BY CONTRACTOR SHALL BEAR INTEREST, AT THE RATE OF INTEREST PROVIDED TO BE PAID ON JUDGMENT UNDER THE LAWS OF THE STATE OF TEXAS. THIS INDEMNIFICATION SHALL NOT BE LIMITED TO DAMAGES, COMPENSATION OR BENEFITS PAYABLE UNDER INSURANCE POLICIES, WORKERS' COMPENSATION ACTS, DISABILITY BENEFIT ACTS OR OTHER EMPLOYEE BENEFIT ACTS.**

**IN THE EVENT THIS CONTRACT RELATES TO A PROJECT OTHER THAN A SINGLE FAMILY HOUSE, TOWNHOUSE, DUPLEX, OR LAND DEVELOPMENT DIRECTLY RELATED THERETO OR A PUBLIC WORKS PROJECT OF A MUNICIPALITY THEN THE INDEMNITY PROVISIONS INCLUDED HEREIN SHALL BE LIMITED SUCH THAT SUBCONTRACTOR SHALL NOT BE REQUIRED TO INDEMNIFY, HOLD HARMLESS OR DEFEND CONTRACTOR OR ANY THIRD PARTIES AGAINST A CLAIM CAUSED BY THE NEGLIGENCE OR FAULT, THE BREACH OR VIOLATION OF A STATUTE, ORDINANCE, GOVERNMENTAL REGULATION, STANDARD, OR RULE, OR THE BREACH OF CONTRACT OF AN INDEMNIFIED PARTY, ITS AGENT OR EMPLOYEE, OR ANY THIRD PARTY UNDER THE CONTROL OR SUPERVISION OF THE INDEMNIFIED PARTY, OTHER THAN SUBCONTRACTOR OR ITS AGENT, EMPLOYEE, OR SUBCONTRACTOR OF ANY TIER EXCEPT THAT SUBCONTRACTOR SHALL INDEMNIFY, HOLD HARMLESS AND DEFEND THE INDEMNIFIED PARTY AGAINST ANY CLAIMS FOR THE BODILY INJURY OR DEATH OF AN EMPLOYEE OF SUBCONTRACTOR, ITS AGENTS, OR ITS SUBCONTRACTORS OF ANY TIER.**

**NOTWITHSTANDING ANYTHING HEREIN TO THE CONTRARY, THE INDEMNITY PROVISIONS INCLUDED HEREIN SHALL BE LIMITED SUCH THAT CONTRACTOR SHALL NOT BE REQUIRED TO INDEMNIFY, HOLD HARMLESS OR DEFEND OWNER OR ANY THIRD PARTIES AGAINST A CLAIM CAUSED BY THE NEGLIGENCE OR FAULT, THE BREACH OR VIOLATION OF A STATUTE, ORDINANCE, GOVERNMENTAL REGULATION, STANDARD, OR RULE, OR THE BREACH OF CONTRACT OF THE INDEMNIFIED PARTIES, ITS AGENT OR EMPLOYEE, OR ANY THIRD PARTY UNDER THE CONTROL OR SUPERVISION OF THE INDEMNIFIED PARTIES, OTHER THAN CONTRACTOR OR ITS AGENT, EMPLOYEE, OR SUBCONTRACTOR OF ANY TIER EXCEPT THAT CONTRACTOR SHALL INDEMNIFY, HOLD HARMLESS AND DEFEND THE INDEMNIFIED PARTIES AGAINST ANY CLAIMS FOR THE BODILY INJURY OR DEATH OF AN EMPLOYEE OF CONTRACTOR, ITS AGENTS, OR ITS SUBCONTRACTORS OF ANY TIER."**

I. Add the following language after Section 103.3.1.4 of the General Provisions:

"**103.3.1.5. Maintenance Bond**. A good and sufficient bond in an amount not less than **100-percent** of the approximate total of the Contract, as evidenced by the proposed tabulation, or conditioned on the full and proper maintenance and repair of the Work to be done and performed for a period of one year from the date of final acceptance of the Work and the Contractor will do all necessary backfilling that may arise on account of sunken conditions in ditches, or otherwise, and do and perform the necessary Work and repair any defective condition growing out of or arising from the improper laying or construction of same, or on account of any breaking of same caused by the Contractor in construction of same, or on account of any defect arising in any of the Work laid or constructed by the Contractor or on account of improper excavation or backfilling, it being understood that the purpose of this Section is to cover all defective conditions arising by reason of defective materials, Work, or labor performed by the Contractor."

J. Add the following language after Section 104.2.5. of the General Provisions:

"**104.2.6. Change Orders**. A Change Order is a written instrument and signed by the Owner, Contractor and Engineer stating their agreement upon all of the following:

(1) the change in the Work;

(2) the amount of the adjustment, if any, in the Contract Sum; and

(3) the extent of the adjustment, if any, in the Contract Time.

In the event the Contractor proposes a Change Order, the Contractor shall provide sufficient detail for such Change Order to allow analysis and review by the Engineer.

Agreement on any Change Order shall constitute final agreement on the Work which is the subject of the Change Order, including, but not limited to, all direct and indirect costs associated with such change and any and all adjustments to the Contract Sum and the Contract Time. In the event a Change Order increases the Contract Sum, the Contractor shall include the Work covered by such Change Orders in Applications for Payment as if such Work were originally part of the Contract Documents.

The Contractor, upon receipt of written notification by the Owner or the Engineer of a proposed item or change in Work, shall prepare as soon as possible a Change Order on the form provided by the Owner. If the Change Order is returned to the Contractor for additional information or if the scope of the proposed change in the Work is modified by additions, deletions or other revisions, the Contractor shall revise the Change Order accordingly and resubmit the revised Change Order to the Owner and Engineer."

K. Delete the language in Section 105.2.1 of the General Provisions and replace it with the following language:

**"105.2.1. WORKMANSHIP**: If the OWNER notifies the CONTRACTOR in writing of defective work, the CONTRACTOR shall correct the deficiencies within five (5) calendar days of the Notice at no additional cost to the OWNER. If the defective work is not corrected within five (5) calendar days, or the CONTRACTOR is not making satisfactory progress (in the opinion of the OWNER) to correct the deficiencies, the OWNER may withhold future payments for All Work until the defective work has been corrected to the satisfaction of the OWNER."

L. Add the following language after Section 105.10 of the General Provisions:

"**105.10.2. GUARANTEE AFTER COMPLETION**: Unless otherwise specified in the technical section of these specifications, the CONTRACTOR shall, after test and acceptance, and for a period of one year from date of final written acceptance by the OWNER or within such longer or shorter period of time as may be prescribed by law or by the terms of any other applicable special warranty on designated equipment or portions of work as required by the Contract Documents, rebuild, repair, or replace any and all items

which have proven defective due to unsatisfactory material and/or workmanship. Upon written notice from the OWNER, the CONTRACTOR shall immediately make any repairs that may be ordered, or such repairs will be made by the Owner at the expense of the CONTRACTOR or the CONTRACTOR'S Surety. In case of an emergency where delay would cause serious loss or damage, the Owner may undertake to have the defects repaired without previous notice. The expense of all repairs, including all emergency repairs, shall be borne by the CONTRACTOR or the CONTRACTOR'S Surety, at no cost to the Owner. This obligation shall survive termination of the Contract.

**105.10.3. OFFSET PROGRESS PAYMENTS**: OWNER may, at its option, offset any progress payment or final payment under the Contract Documents against any debt (including taxes) lawfully due to OWNER from Contractor, regardless of whether the amount due arises pursuant to the terms of the Contract Documents or otherwise and regardless of whether or not the debt due to OWNER has been reduced to judgment by a court.

**105.10.4. FINAL ACCEPTANCE AND PAYMENT**: This Project is subject to final inspection and final acceptance by the Owner. Whenever the Work provided for by the Contract shall have been completely performed on the part of the CONTRACTOR, including, but not limited to compliance with North Central Texas Council of Governments Standard Specifications for Public Works Construction, October 2004 Section 202.6.4.6., the CONTRACTOR shall notify the OWNER that the Work is ready for final inspection. The OWNER will then make such final inspection and if the work is satisfactory and in accordance with the specifications and contract documents, the OWNER shall issue a certificate of acceptance to the CONTRACTOR and submit a request to accept the Work performed by the CONTRACTOR and payment of a final estimate under the terms of which the OWNER will release 100% of the retainage, plus the unpaid portions of the final estimate as the OWNER deems advisable.

Whenever the improvements provided for by the Contract shall have been completely performed on the part of the Contractor, as evidenced in the certificate of acceptance, and all required submissions provided to the OWNER, a final estimate showing the value of the Work shall be prepared by the OWNER as soon as the necessary measurements and computations can be made. All prior estimates upon which payments have been made are subject to necessary corrections or revisions in the final payment. The amount of this final estimate, less any sums that have been previously paid, deducted or retained under the provisions of the contract, shall be

paid the CONTRACTOR within 30 days after the final acceptance by the OWNER, provided the CONTRACTOR has furnished to the OWNER a consent of Surety and satisfactory evidence that all indebtedness connected with the Work and all sums of money due for any labor, materials, apparatus, fixtures, or machinery furnished for and used in the performance of the Work have been paid or otherwise satisfied, or that the person or persons to whom the same may respectively be due have consented to such final payment This requirement it not intended and shall not be construed to recognize subcontractors for the purpose of privity of contract, and no third party benefit rights shall be obtained through these provisions for final payment. The acceptance by the CONTRACTOR of the final payment as aforesaid shall operate as and shall be a release to the OWNER from all claims or liabilities under the Contract, including all subcontractor claims, for anything done or furnished or relating to the Work under the Contract or for any act or neglect of said OWNER relating to or connected with the Contract.

All warranties and guarantees shall commence from the date of the certificate of acceptance. No interest shall be due the CONTRACTOR on any partial or final payment, or on the retainage.

**105.10.5. RIGHT TO AUDIT CONTRACTOR'S RECORDS**: By execution of the Contract, CONTRACTOR grants the OWNER the right to audit, at Owner's election, all of CONTRACTOR'S records and billings relating to the performance of the Work under the Contract. CONTRACTOR agrees to retain such records for a minimum of three (3) years following completion of the Work under this Contract. OWNER agrees that it will exercise the right to audit only at reasonable hours."

M. Add the following language after Section 107.5 of the General Provisions:

"**107.5.1. COMPENSATION AND ACKNOWLEDGEMENT OF WORK**: The CONTRACTOR shall receive and accept compensation, as herein provided, as full payment for furnishing all labor, tools, material, equipment and incidentals; for performing all Work contemplated and embraced under the Contract; for all loss or damage arising out of the nature of the Work, or from the action of the elements; for any unforeseen defects or obstruction which may arise or be encountered during the prosecution of the Work and before its final acceptance by the OWNER; for all risks of whatever description connected with the prosecution of the Work; for all expense incurred by or in consequence of suspension or discontinuance of such prosecution of the Work as herein specified; for any infringement of patents, trademarks or copyrights; and for

completing the Work in an acceptable manner according to the Plans and Specifications."

N. Add the following language after Section 107.11 of the General Provisions:

"**107.11.1. COOPERATION OF THE CONTRACTOR**: The CONTRACTOR shall give to the work the consistent attention necessary to facilitate the progress thereof, and the CONTRACTOR shall cooperate with the OWNER, and with other CONTRACTORS in every way possible.

The OWNER and the OWNER'S representatives shall at all times have free access to the Work whenever it is in preparation or progress and the contractor shall provide safe, convenient and proper facilities for such access and inspection."

O. Delete Section 107.4 of the General Provisions and replace it with the following:

"**107.4. VENUE AND CHOICE OF LAW**

The Owner, the Contractor, and the Contractor's sureties agree that this Contract shall be performed in Dallas, Dallas County, Texas, and if legal action is necessary in connection therewith, exclusive venue shall lie in Dallas County, Texas. The terms and provisions of the Contract Documents shall be construed in accordance with the laws and court decisions of the State of Texas."

P. Delete the following language (which is the first paragraph) from Section 109.5.1. of the General Provisions:

"Between the 25th day and the last day of each month, the Owner shall make an approximate estimate of the value of the work done during the month under the specifications. Whenever the said estimate or estimates of work done since the last previous estimate exceeds $100 in amount, a percentage of such estimate sum shall be paid the Contractor on or before the 15th day of the month next following. The monthly estimate may include acceptable nonperishable materials delivered to the work; such payment shall be allowed on the same percentage basis of the net invoice value as provided hereinafter. The percent retained by the owner shall normally be up to 10 percent at completion, unless otherwise stated. At the midpoint, or at any subsequent time, if the owner determines that the progress of the Contract is satisfactory in all respects, it may at its discretion cease to retain additional funds until the completion of the project, or until progress ceases to be satisfactory. The owner shall make the sole determination in this matter."

Q. Add the following language after Section 109.5.1. of the General Provisions:

"**109.5.1.1. Applications for Payment.** Applications for progress payment ("Application for Payment") will be submitted no more often than monthly and shall be submitted on the dates set forth in the Agreement. Each Application for Payment shall be (1) sworn to and notarized, (2) supported by such data substantiating the Contractor's right to payment as the Owner or Engineer may require, such as copies of requisitions from Subcontractors and material suppliers, and reflecting retainage if provided for in the Contract Documents, and (3) submitted by the Contractor for review to the Engineer in form and substance as mandated by the Owner. The Contractor's Application for Payment shall be segregated and detailed in a manner satisfactory to the Owner.

In each Application for Payment, the Contractor shall certify that such Application for Payment represents a just estimate of portion of the Work that is complete as of the last day covered by the Application for Payment and shall also certify by sworn affidavit as follows:

> 'There are no known mechanics' or materialmen's liens outstanding at the date of this Application, all due and payable bills with respect to the Work have been paid to date or shall be paid from the proceeds of this Application for Payment, there is no known basis for filing of any mechanics' or materialmen's liens on the Work, and waivers from all subcontractors and materialmen have been or, at the time of payment, will be obtained in such form as to constitute an effective waiver of lien under the applicable laws of the State of Texas.'

**109.5.1.2. Lien Waivers.** Concurrent with each Application for Payment, the Contractor shall execute and furnish a waiver and release of its lien rights current through the effective date of such Application for Payment conditioned upon receipt of the payment that is the subject of the application. Beginning with the second Application for Payment, the Contractor shall also deliver with each such Application as a condition precedent to payment thereof, waivers of lien from each of the Subcontractors, Sub-subcontractors, and suppliers current through the effective date of the previous Application of Payment. The Contractor shall also execute and obtain any other reasonable forms as the Owner may require in order to assure an effective waiver and release of mechanics' and materialmen's liens in compliance with the laws of the State of Texas. The Contractor shall, if any Subcontractor, Sub-subcontractor or supplier refuses to furnish a release in full, furnish a bond satisfactory to the Owner to indemnify against any lien."

R. Delete Section 109.5.2 of the General Provisions and replace with the following:

> "Ten-percent (10%) retainage shall be withheld until 40 days after Final Completion."

**88.** **CONTRACTOR REPRESENTATIONS:** By entering into the Contract, the Contractor makes the following representations to the Town of Addison:

A. Contractor has examined and carefully studied the Bidding Documents and the related data identified in the Bidding Documents.

B. The Contractor has visited the Project site where the goods are to be installed or services will be provided and become familiar with and is satisfied as to the observable local conditions that may affect cost, progress, or the furnishing of goods and services, if required to do so by the Bidding Documents, or if, in the Contractor's judgment, any local condition may affect cost, progress, or the furnishing of goods and services.

C. The Contractor is familiar with and is satisfied as to all Laws and Regulations in effect as of the date of the bid that may affect cost, progress, and the furnishing of goods and services.

D. The Contractor has carefully studied, considered, and correlated the information known to the Contractor; information commonly known to sellers of similar goods doing business in the locality of the Project site where the goods will be installed or where services will be provided; information and observations obtained from the Contractor's visits, if any, to the Project site where the goods will be installed or services will be provided; and any reports and drawings identified in the Bidding Documents regarding the Project site where the goods will be installed or where services will be provided, with respect to the effect of such information, observations, and documents on the cost, progress, and performance of the Contractor's obligations under the Bidding Documents.

E. The Contractor has given the Engineer written notice of all conflicts, errors, ambiguities, and discrepancies that the Contractor has discovered in the Bidding Documents, and the written resolution (if any) thereof by the Engineer is acceptable to the Contractor.

F. The Bidding Documents are generally sufficient to indicate and convey understanding of all terms and conditions for furnishing the goods and services for which the bid is submitted

G. The Contractor acknowledges that estimated quantities are not guaranteed and are solely for the purpose of comparison of bids, and final payment for all unit price bid items will be based on actual quantities, determined as provided in the Contract Documents. The Contractor also acknowledges that each unit price includes an amount considered by the Contractor to be adequate to cover the Contractor's overhead and profit for each separately identified item.

**89.** **PREVAILING WAGE RATES:** Wage rates paid on this Project shall not be less than specified in the schedule of general prevailing rates of per diem wages as set forth below in the Davis Bacon Act General Decision No. TX130035:

General Decision Number: TX20210025 01/01/2021

Superseded General Decision Number: TX20200025

State: Texas

Construction Type: Highway

Counties: Archer, Callahan, Clay, Collin, Dallas, Delta,

Denton, Ellis, Grayson, Hunt, Johnson, Jones, Kaufman, Parker,

Rockwall, Tarrant and Wise Counties in Texas.

HIGHWAY CONSTRUCTION PROJECTS (excluding tunnels, building

structures in rest area projects & railroad construction;

bascule, suspension & spandrel arch bridges designed for

commercial navigation, bridges involving marine construction;

and other major bridges).

Note: Under Executive Order (EO) 13658, an hourly minimum wage of $10.95 for calendar year 2021 applies to all contracts subject to the Davis-Bacon Act for which the contract is awarded (and any solicitation was issued) on or after January 1, 2015. If this contract is covered by the EO, the contractor must pay all workers in any classification listed on this wage determination at least $10.95 per hour (or the applicable wage rate listed on this wage determination, if it is higher) for all hours spent performing on the contract in calendar year 2021. If this contract is covered by the EO and a classification considered necessary for performance of work on the contract does not appear on this wage determination, the contractor must pay workers in that classification at least the wage rate determined through the conformance process set forth in 29 CFR 5.5(a)(1)(ii) (or the EO minimum wage rate, if it is higher than the conformed wage rate). The EO minimum wage rate will be adjusted annually. Please note that this EO applies to the above-mentioned types of contracts entered into by the federal government that are subject to the Davis-Bacon Act itself, but it does not apply to contracts subject only to the Davis-Bacon Related Acts, including those set forth at 29 CFR 5.1(a)(2)-(60). Additional information on contractor requirements and worker protections under the EO is available at www.dol.gov/whd/govcontracts.

Modification Number Publication Date

0 01/01/2021

* SUTX2011-007 08/03/2011

| | Rates | Fringes |
|---|---|---|
| CONCRETE FINISHER (Paving and Structures) | $ 14.12 | |
| ELECTRICIAN | $ 19.80 | |
| FORM BUILDER/FORM SETTER | | |
| Paving & Curb | $ 13.16 | |
| Structures | $ 13.84 | |
| LABORER | | |
| Asphalt Raker | $ 12.69 | |
| Flagger | $ 10.06 | |
| Laborer, Common | $ 10.72 | |

Laborer, Utility.....$ 12.32

Pipelayer.....$ 13.24

Work Zone Barricade

Servicer.....$ 11.68

POWER EQUIPMENT OPERATOR:

Asphalt Distributor.....$ 15.32

Asphalt Paving Machine.....$ 13.99

Broom or Sweeper.....$ 11.74

Concrete Pavement

Finishing Machine.....$ 16.05

Concrete Saw.....$ 14.48

Crane Operator, Lattice

Boom 80 Tons or Less.....$ 17.27

Crane Operator, Lattice

Boom over 80 Tons.....$ 20.52

Crane, Hydraulic 80 Tons

or Less.....$ 18.12

Crawler Tractor.....$ 14.07

Excavator, 50,000 pounds

or less.....$ 17.19

Excavator, over 50,000

pounds.....$ 16.99

Foundation Drill , Truck

Mounted.....$ 21.07

Foundation Drill, Crawler Mounted.....$ 17.99

Front End Loader 3 CY or Less.....$ 13.69

Front End Loader, over 3 CY.$ 14.72

Loader/Backhoe.....$ 15.18

Mechanic.....$ 17.68

Milling Machine.....$ 14.32

Motor Grader, Fine Grade....$ 17.19

Motor Grader, Rough.....$ 16.02

Pavement Marking Machine....$ 13.63

Reclaimer/Pulverizer.....$ 11.01

Roller, Asphalt.....$ 13.08

Roller, Other.....$ 11.51

Scraper.....$ 12.96

Small Slipform Machine.....$ 15.96

Spreader Box.....$ 14.73

Servicer.....$ 14.58

Steel Worker (Reinforcing).....$ 16.18

TRUCK DRIVER

Lowboy-Float.....$ 16.24

Off Road Hauler.....$ 12.25

Single Axle.....$ 12.31

Single or Tandem Axle Dump

Truck.....$ 12.62

Tandem Axle Tractor with

Semi Trailer.....$ 12.86

Transit-Mix.....$ 14.14

WELDER.....$ 14.84

---

WELDERS - Receive rate prescribed for craft performing operation to which welding is incidental.

==========

Note: Executive Order (EO) 13706, Establishing Paid Sick Leave for Federal Contractors applies to all contracts subject to the Davis-Bacon Act for which the contract is awarded (and any solicitation was issued) on or after January 1, 2017. If this contract is covered by the EO, the contractor must provide employees with 1 hour of paid sick leave for every 30 hours they work, up to 56 hours of paid sick leave each year. Employees must be permitted to use paid sick leave for their own illness, injury or other health-related needs, including preventive care; to assist a family member (or person who is

like family to the employee) who is ill, injured, or has other health-related needs, including preventive care; or for reasons resulting from, or to assist a family member (or person who is like family to the employee) who is a victim of, domestic violence, sexual assault, or stalking. Additional information on contractor requirements and worker protections under the EO is available at www.dol.gov/whd/govcontracts.

Unlisted classifications needed for work not included within the scope of the classifications listed may be added after award only as provided in the labor standards contract clauses (29CFR 5.5 (a) (1) (ii)).

---

The body of each wage determination lists the classification and wage rates that have been found to be prevailing for the cited type(s) of construction in the area covered by the wage determination. The classifications are listed in alphabetical order of ""identifiers"" that indicate whether the particular rate is a union rate (current union negotiated rate for local), a survey rate (weighted average rate) or a union average rate (weighted union average rate).

Union Rate Identifiers

A four letter classification abbreviation identifier enclosed in dotted lines beginning with characters other than ""SU"" or ""UAVG"" denotes that the union classification and rate were prevailing for that classification in the survey. Example: PLUM0198-005 07/01/2014. PLUM is an abbreviation identifier of the union which prevailed in the survey for this classification, which in this example would be Plumbers. 0198 indicates the local union number or district council number where applicable, i.e., Plumbers Local 0198. The next number, 005 in the example, is an internal number used in processing the wage determination. 07/01/2014 is the effective date of the most current negotiated rate, which in this example is July 1, 2014.

Union prevailing wage rates are updated to reflect all rate changes in the collective bargaining agreement (CBA) governing this classification and rate.

Survey Rate Identifiers

Classifications listed under the ""SU"" identifier indicate that no one rate prevailed for this classification in the survey and

the published rate is derived by computing a weighted average rate based on all the rates reported in the survey for that classification. As this weighted average rate includes all rates reported in the survey, it may include both union and non-union rates. Example: SULA2012-007 5/13/2014. SU indicates the rates are survey rates based on a weighted average calculation of rates and are not majority rates. LA indicates the State of Louisiana. 2012 is the year of survey on which these classifications and rates are based. The next number, 007 in the example, is an internal number used in producing the wage determination. 5/13/2014 indicates the survey completion date for the classifications and rates under that identifier.

Survey wage rates are not updated and remain in effect until a new survey is conducted.

Union Average Rate Identifiers

Classification(s) listed under the UAVG identifier indicate that no single majority rate prevailed for those classifications; however, 100% of the data reported for the classifications was union data. EXAMPLE: UAVG-OH-0010 08/29/2014. UAVG indicates that the rate is a weighted union average rate. OH indicates the state. The next number, 0010 in the example, is an internal number used in producing the wage

determination. 08/29/2014 indicates the survey completion date for the classifications and rates under that identifier.

A UAVG rate will be updated once a year, usually in January of each year, to reflect a weighted average of the current negotiated/CBA rate of the union locals from which the rate is based.

---

WAGE DETERMINATION APPEALS PROCESS

1.) Has there been an initial decision in the matter? This can be:

* an existing published wage determination
* a survey underlying a wage determination
* a Wage and Hour Division letter setting forth a position on a wage determination matter
* a conformance (additional classification and rate) ruling

On survey related matters, initial contact, including requests for summaries of surveys, should be with the Wage and Hour

Regional Office for the area in which the survey was conducted because those Regional Offices have responsibility for the Davis-Bacon survey program. If the response from this initial contact is not satisfactory, then the process described in 2.) and 3.) should be followed.

With regard to any other matter not yet ripe for the formal process described here, initial contact should be with the Branch of Construction Wage Determinations. Write to:

Branch of Construction Wage Determinations
Wage and Hour Division
U.S. Department of Labor
200 Constitution Avenue, N.W.
Washington, DC 20210

2.) If the answer to the question in 1.) is yes, then an interested party (those affected by the action) can request review and reconsideration from the Wage and Hour Administrator (See 29 CFR Part 1.8 and 29 CFR Part 7). Write to:

Wage and Hour Administrator
U.S. Department of Labor
200 Constitution Avenue, N.W.
Washington, DC 20210

The request should be accompanied by a full statement of the interested party's position and by any information (wage payment data, project description, area practice material, etc.) that the requestor considers relevant to the issue.

3.) If the decision of the Administrator is not favorable, an interested party may appeal directly to the Administrative Review Board (formerly the Wage Appeals Board). Write to:

Administrative Review Board
U.S. Department of Labor
200 Constitution Avenue, N.W.
Washington, DC 20210

4.) All decisions by the Administrative Review Board are final.

==========

END OF GENERAL DECISION

**90.** **NO BOYCOTT ISREAL:** Pursuant to Texas Government Code Chapter 2270, Contractor's execution of this Agreement shall serve as verification that the Contractor does not presently boycott Israel and will not boycott Israel during the term of this Agreement.

END OF GENERAL DECISION

**SECTION PS**

# PROJECT SIGN

# PROJECT SIGN

## 1. Quantity

**Two (2)** Project Designation signs will be constructed and installed on the project site as directed by the Owner. It will be the responsibility of the Contractor to maintain the sign in a presentable condition at all times during construction. Maintenance will include painting and repairs as directed by the City Engineer or his appointee. The locations of the signs will be given to the Contractor by the Town of Addison at the Pre-Construction Conference.

## 2. Material

Sign shall be constructed of ¾-inch thick smooth finish fir plywood (Grade A-C, exterior or better).

Sign will be securely mounted to 6" x 6" square posts. Nuts and bolts will not protrude from face of sign. Posts will be mounted to a support system that will provide adequate stabilization to ensure the sign will not fall over in heavy winds. Sand bags or other techniques may be necessary to protect sign.

## 3. Dimensions

Size of sign will be four feet tall and six feet wide. The height and arrangement of the lettering shall be in accordance with the attached detail.

## 4. Paint

Sign will be one-sided and will have a white background. Text will be black, except for the word "Addison!" which will be a blue color approved by the City Engineer. The paint will be an outdoor paint and will be maintained throughout the project in proper order. The quality of the paint, painting, and lettering on the signs shall be approved by the City Engineer or his appointee.

## 5. Payment

Project Signs will be a separate pay item. This will include all labor, equipment, tools, and incidentals necessary to complete and install the work.

The Town of ADDISON SM

# PLEASE PARDON THE TEMPORARY INCONVENIENCE DURING THIS PROJECT

# "PROJECT NAME"

CONTRACTOR: _____

ESTIMATED COMPLETION DATE: XXX

**AN ADDISON PROJECT**

**FOR MORE INFORMATION, PLEASE CALL (972) 450-2871**

# Special Specification 7076
# Grouting of Water Mains

## 1. DESCRIPTION

This item will govern the grouting of existing water mains for the purposes of abandonment underneath roadways, paved areas, and at other designated locations. The location of this Work is as shown on the Contract Document plans and/or as encountered in the field during construction. The Contractor will, unless otherwise specified, furnish all labor, materials, equipment, tools and all other appurtenances necessary to abandon water lines segments in place by filling them with flowable cementious low strength grout including plugs, bulkheads, excavation and backfill at locations as required to completely fill the line to be abandoned in place with grout to protect against future collapse of the line.

## 2. SUBMITTALS

A. Proposed Mix Design Report

B. Submit manufacturers data for proposed plugs and detail of bulkhead

C. Technical information for equipment and operations procedures including projected injection rate, grout pressure, method of controlling grout pressure, bulkhead and vent design and number of stages of grout application.

D. Submit project specific plan for abandonment at least 15 days prior to commencing grouting activities, describe proposed sequence and other information pertinent to completion of Work.

## 3. MATERIALS

A. Cement-based grout/ flowable fill with self-leveling and non-shrink characteristics.

B. Unconfined compressive strength: Minimum 100 psi at 56 days as determined based on average of three tests for same placement. Present at least three acceptable strength tests for proposed mix design in mix design report.

## 4. CONSTRUCTION

Abandoning and grouting of water lines must not occur until all existing water mains and services have been transferred to a relocated water line or another line as designated in the Contract Documents. The Contractor will be responsible for the satisfactory coordination of the pipe abandonments with other construction and activities in the area. Delays in work resulting from lack of coordination will not be cause for additional compensation. Any work involving or impacting asbestos concrete pipe must be in accordance with the procedures outlined in the approved specifications for this project and will comply with all federal, state, and local laws, ordinances and regulations regarding the management of asbestos containing materials.

Remove all water line appurtenances, such as hydrants, valves and valve casing and castings. These appurtenances must be returned to the designated utility representative.

Make cuts, install bulkheads, vents to allow for air release

Remove any free standing water prior to starting fill placement.

Place grout/flowable fill using concrete or grout pumps capable of continuous delivery at planned placement rate to fill volume between placement points not to exceed 500 linear ft. at a time. Pump flowable fill through bulkheads constructed for placement of PVC pipes or other methods to contain grout in line to be abandoned. These pipe will be used for injection points or vents during placement. Place grout under pressure into property vented open system until grout emerges from vent pipes indicating pipe is completely filled. Pumping grout must be completed under sufficient pressure to overcome friction and to fill water main from downstream to upstream end. Remediate areas where flowable fill did not fill voids in water main by pressure grouting from inside water main or from surface if necessary. Plug each end of the water main being abandoned. Ensure that concrete is around plug/bulkhead and around pipe including bedding area such that it is not penetrable by groundwater and that bedding at this location is not a conduit for groundwater. The method of installation must be able to meet the requirement of completely filling the existing water main and any voids adjacent to it.

Backfill to grade above pipe left in place. Place and compact backfill in compliance with the Special Specifications.

Remove, transport, and, dispose of spoils. Spoils including pipe must be hauled to a facility permitted to accept the material. The method must provide for the release of air. When intermediate points are required to be constructed for the abandonment of the system, they must be a part of the abandonment project process. The method must provide for the isolation of water mains to be grouted from water mains that are abandoned in place without grouting as shown on the plans.

Water mains that are not under proposed pavement are generally not required to be grouted unless it is specified in the contract documents. Mains to be abandoned must be grouted only if required by the contract documents and payment as per these specifications is provided.

## 5. MEASUREMENT

This Item will be measured by the linear foot of water main to be abandoned regardless of depth.

## 6. PAYMENT

The work performed and materials furnished in accordance with this Item and measured as provided under “Measurement” will be paid for at the unit price bid for “Grout Abandonment Water Main of the size of water main specified. This price will be full compensation for the removing of the content within the pipe, cleaning, grouting, plugging, capping and abandoning all pipe, pipe bend section and all other appurtenance, and of dewatering, trenching, excavation and backfill, removal, transportation and disposal and all material or work necessary to properly abandon the pipe and must include all materials, labor, equipment, tools and incidentals necessary to complete the work.

## SECTION TS

# TECHNICAL SPECIFICATIONS

**STANDARD SPECIFICATIONS FOR PUBLIC WORKS CONSTRUCTION (North Central Texas) - Fifth Edition 2017**

For this project, the Standard Specifications for Public Works Construction, North Central Texas, as prepared by the North Central Texas Council of Governments, and Town of Addison Standard Construction Details, shall govern all work to be done, together with any additional Technical Specifications included herein.

The following is a listing of technical specification sections that are anticipated for use on this project.

| | |
|---|---|
| Site Protection & Preparation | Division 200 |
| Roadway Construction | Division 300 |
| Roadway Maintenance & Rehabilitation | Division 400 |
| Underground Construction | Division 500 |
| Conduit & Appurtenance Rehabilitation | Division 600 |
| Structures | Division 700 |
| Misc. Construction & Materials | Division 800 |

**TXDOT STANDARD SPECIFICATION**

The Texas Department of Transportation Standard Specifications for Construction and Maintenance of Highways, Streets, and Bridges Adopted by the Texas Department of Transportation November 1, 2014 are included in the contract by reference and are available as a separate document from TxDOT at the following link: https://www.txdot.gov/business/resources/txdot-specifications.html)

The following is a listing of technical specifications that are anticipated for use on this project.

| | |
|---|---|
| Item 340 | Dense-Graded Hot-Mix Asphalt (Small Quantity) |
| Item 401 | Flowable Fill |
| Item 416 | Drilled Shaft Foundations |
| Item 420 | Concrete Substructures |
| Item 422 | Concrete Superstructures |
| Item 425 | Precast Prestressed Concrete Structural Members |
| Item 432 | Riprap |
| Item 434 | Bridge Bearings |
| Item 442 | Metals for Structures |
| Item 450 | Railing |
| Item 454 | Bridge Expansion Joints |
| Item 462 | Concrete Box Culverts and Drains |
| Item 464 | Reinforced Concrete Pipe |

| | |
|---|---|
| Item 466 | Headwall and Wingwall |
| Item 467 | Safety End Treatment |
| Item 531 | Sidewalks |
| Item 540 | Metal Beam Guard Fence |
| Item 644 | Small Roadside Sign Assemblies |
| Item 666 | Retroreflectorized Pavement Markings |

The following is a listing of special specifications that are anticipated for use on this project.

| | |
|---|---|
| SS7076 | Grouting of Water Mains |

**SECTION IS**

# ADDITIONAL INSURANCE REQUIREMENTS

**TOWN OF ADDISON, TEXAS**
**ADDISON AIRPORT NORTHWEST DRAINAGE DITCH IMPROVEMENTS**

## REQUIREMENTS

Contractors performing work on TOWN OF ADDISON property or public right-of-way shall provide the TOWN OF ADDISON a certificate of insurance or a copy of their insurance policy(s) (and including a copy of the endorsements necessary to meet the requirements and instructions contained herein) evidencing the coverages and coverage provisions identified herein within ten (10) days of request from TOWN OF ADDISON. Contractors shall provide TOWN OF ADDISON evidence that all subcontractors performing work on the project have the same types and amounts of coverages as required herein or that the subcontractors are included under the contractor's policy. Work shall not commence until insurance has been approved by TOWN OF ADDISON.

All insurance companies and coverages must be authorized by the Texas Department of Insurance to transact business in the State of Texas and must have a A.M. Best's rating A-:VII or greater.

Listed below are the types and minimum amounts of insurances required and which must be maintained during the term of the contract. TOWN OF ADDISON reserves the right to amend or require additional types and amounts of coverages or provisions depending on the nature of the work.

| TYPE OF INSURANCE | AMOUNT OF INSURANCE | PROVISIONS |
|---|---|---|
| 1. **Workers' Compensation Employers' Liability** to include:<br>(a) each accident<br>(b) Disease Policy Limits<br>(c) Disease each employee | Statutory Limits per occurrence<br><br>Each accident $1,000,000<br>Disease Policy Limits $1,000,000<br>Disease each employee$1,000,000 | **TOWN OF ADDISON, and Cobb, Fendley & Associates, Inc. to be provided a *WAIVER OF SUBROGATION AND 30 DAY NOTICE OF CANCELLATION or*** material change in coverage.<br>**Insurance company must be A-:VII rated or above.** |
| 2. **Commercial General (Public) Liability** to include coverage for:<br>a) Bodily Injury<br>b) Property damage<br>c) Independent Contractors<br>d) Personal Injury<br>e) Contractual Liability | Bodily Injury/Property Damage per occurrence $1,000,000, General Aggregate $2,000,000 Products/Completed Aggregate $2,000,000, Personal Advertising Injury per occurrence $1,000,000, Medical Expense 5,000 | **TOWN OF ADDISON, and Cobb, Fendley & Associates, Inc. *to be listed as ADDITIONAL INSURED and provided 30 DAY NOTICE OF CANCELLATION* or material change in coverage.**<br>**Insurance company must be A-:VII rated or above.** |
| 3. **Business Auto Liability** to include coverage for:<br>a) Owned/Leased vehicles<br>b) Non-owned vehicles<br>c) Hired vehicles | Combined Single Limit $1,000,000 per occurrence for bodily injury and property damage | **TOWN OF ADDISON, and Cobb, Fendley & Associates, Inc. *to be listed as ADDITIONAL INSURED and provided 30 DAY NOTICE OF CANCELLATION* or material change in coverage.**<br>**Insurance company must be A:VII- rated or above.** |
| 4. **Umbrella or Excess Liability Policy over Commercial General Liability and Automobile Liability limits of $1 million per occurrence** | Minimum $4 million per occurrence excess $1 million underlying per occurrence | **TOWN OF ADDISON, and Cobb, Fendley & Associates, Inc. *to be listed as ADDITIONAL INSURED and provided 30 DAY NOTICE OF CANCELLATION* or material change in coverage.**<br>**Insurance company must be A:VII- rated or above.** |

Certificate of Liability Insurance forms (together with the endorsements necessary to meet the requirements and instructions contained herein)may be **faxed** to the Purchasing Department: **972-450-7074 or emailed to: purchasing@addisontx.gov.** Questions regarding required insurance should be directed to the Purchasing Manager.

With respect to the foregoing insurance,

1. All liability policies shall contain no cross liability exclusions or insured versus insured restrictions applicable to the claims of the Town of Addison.

2. All insurance policies shall be endorsed to require the insurer to immediately notify the Town of Addison, Texas of any material change in the insurance coverage.

3. All insurance policies shall be endorsed to the effect that the Town of Addison, Texas will receive at least thirty (30) days' notice prior to cancellation or non-renewal of the insurance.

4. All insurance policies, which name the Town of Addison and Kimley-Horn and Associates, Inc. as an additional insured, must be endorsed to read as primary coverage regardless of the application of other insurance.

5. Insurance must be purchased from insurers that are financially acceptable to the Town of Addison and licensed to do business in the State of Texas.

All insurance must be written on forms filed with and approved by the Texas Department of Insurance. Upon request, Contractor shall furnish the Town of Addison with complete copies of all insurance policies certified to be true and correct by the insurance carrier.

This form must be signed and returned with your quotation. You are stating that you do have the required insurance and if selected to perform work for TOWN OF ADDISON, will provide the certificates of insurance (and endorsements) with the above requirements to TOWN OF ADDISON within 10 working days.

**A CONTRACT/PURCHASE ORDER WILL NOT BE ISSUED WITHOUT EVIDENCE AND APPROVAL OF INSURANCE.**

**AGREEMENT**

I agree to provide the above described insurance coverages within 10 working days if selected to perform work for TOWN OF ADDISON. I also agree to require any subcontractor(s) to maintain insurance coverage equal to that required by the Contractor. It is the responsibility of the Contractor to assure compliance with this provision. The Town accepts no responsibility arising from the conduct, or lack of conduct, of the Subcontractor.

**Project/Bid#**_____

**Company:**_____

**Printed Name:** _____

**Signature:**_____ **Date:** _____

**APPENDIX A**

# GEOTECHNICAL STUDY

# GEOTECHNICAL STUDY

## Alpha Road Connector – Vitruvian Phase IV
### Farmers Branch, Texas

20212439.001A
December 2, 2020
Revision No. 1: July 15, 2021


© 2021 Kleinfelder


7805 Mesquite Bend Dr., Suite 100, Irving, TX 75063 **p |** 972.868.5009 **f |** 972.409.0008

December 2, 2020
Revision No. 1: July 15, 2021
20212439.001A

Kimley-Horn & Associates, Inc.
2201 West Royal Lane, Suite 275
Irving, Texas 75063

Attention: Mr. Brian LaFoy, PE

**Subject: Geotechnical Study**
**Alpha Road Connector – Vitruvian Phase IV**
**Brookhaven Community College**
**Farmers Branch, Texas**

Dear Mr. LaFoy:

This report transmits the findings of our geotechnical study for the proposed Alpha Road Connector in Farmers Branch, Texas. The results of the field and laboratory work are included along with engineering recommendations for use during the design and construction of the project.

We appreciate the opportunity to be of service to you on this project. If we can be of additional assistance as the design progresses, please contact us at 972.868.5900.

Sincerely,

**KLEINFELDER, INC.**
Texas Registered Engineering Firm F-16438

Richard J. Hammerberg, PE
Senior Project Manager

Sri Dinakaran, PE, DGE, DBIA
Senior Program Manager

Copies Submitted: 1 electronic copy & 1 copy via mail


© 2021 Kleinfelder

7805 Mesquite Bend Dr., Suite 100, Irving, TX 75063 **p |** 972.868.5009 **f |** 972.409.0008

A Report Prepared for:

**Kimley Horn & Associates**
2201 West Royal Lane, Suite 275
Irving, Texas 75063

**GEOTECHNICAL STUDY**
**Alpha Road Connector – Vitruvian Phase IV**
**Farmers Branch, Texas**

20212439.001A
December 2, 2020
Revision No. 1: July 15, 2021

Prepared by:




Richard J. Hammerberg, PE
Senior Project Manager

Sri Dinakaran, PE, DGE, DBIA
Senior Program Manager

7805 Mesquite Bend Drive, Suite 100
Irving, Texas 75063
**p|** 972.868.5900
**f |** 972.409.0008

This document was prepared for use only by the client, only for the purposes stated, and within a reasonable time from issuance, but in no event later than one year from the date of the report. Non-commercial, educational, and scientific use of this report by regulatory agencies is regarded as a "fair use" and not a violation of copyright. Regulatory agencies may make additional copies of this document for internal use. Copies may also be made available to the public as required by law. The reprint must acknowledge the copyright and indicate that permission to reprint has been received.

# TABLE OF CONTENTS


**SECTION** **PAGE**

**1 INTRODUCTION ..... 1**
1.1 PROJECT DESCRIPTION ..... 1
1.2 SITE DESCRIPTION ..... 1
1.3 PURPOSE AND SCOPE ..... 2

**2 FIELD EXPLORATION AND LABORATORY TESTING ..... 3**
2.1 FIELD EXPLORATION ..... 3
2.2 LABORATORY TESTING ..... 5

**3 SUBSURFACE CONDITIONS ..... 6**
3.1 GEOLOGY ..... 6
3.2 STRATIGRAPHY ..... 6
3.3 GROUNDWATER OBSERVATIONS ..... 7
3.4 EXPANSIVE SOIL CHARACTERISTICS ..... 7

**4 ANALYSIS AND RECOMMENDATIONS ..... 10**
4.1 BRIDGE STRUCTURE ..... 10
4.1.1 Drilled Shaft Foundations ..... 10
4.1.2 Drilled Shaft Construction Considerations ..... 11
4.1.3 LPILE Parameters (version 2019) for Soil and Rock ..... 12
4.1.4 Soluble Sulfates ..... 13
4.2 PAVEMENT RECOMMENDATIONS ..... 14
4.2.1 Pavement Thickness ..... 14
4.2.2 Pavement Subgrade Preparation ..... 16
4.2.3 Pavement Material Specifications ..... 16
4.3 ADDITIONAL DESIGN CONSIDERATIONS ..... 17
4.3.1 Box Culvert ..... 17
4.3.2 Wall Structures ..... 17
4.3.3 Wall Outfall ..... 17
4.3.4 Lateral Earth Pressures ..... 18
4.3.5 2018 IBC Seismic Design Parameters ..... 19
4.3.6 Utility and Service Lines ..... 20
4.3.7 Detention Pond Slopes ..... 20

**5 EARTHWORK ..... 21**
5.1 SITE PREPARATION ..... 21
5.2 MATERIAL REQUIREMENTS AND TESTING ..... 21

**6 LIMITATIONS ..... 23**

**FIGURES**
Figure 1 Exploration Location Plan and Vicinity Map

**APPENDICES**
Appendix A ..... Field Explorations
Appendix B ..... Laboratory Testing




© 2021 Kleinfelder



7805 Mesquite Bend Dr., Suite 100, Irving, TX 75063 **p |** 972.868.5009 **f |** 972.409.0008

# GEOTECHNICAL STUDY
# ALPHA ROAD CONNECTOR – VITRUVIAN PHASE IV
# FARMERS BRANCH, TEXAS

## 1 INTRODUCTION

### 1.1 PROJECT DESCRIPTION

This report presents the results of the geotechnical study for the proposed Alpha Road Connector in Farmers Branch, Texas. We understand that the project is planned to link Alpha Road and Bella Road to the Brookhaven Community College and to the master-planned Vitruvian community. Currently, Brookhaven Community College has one point of ingress and egress. The proposed project will increase the ingress and egress points to three and improve the traffic mobility to the college.

Geotechnical information was originally requested to provide design level recommendations for the proposed pavements, culverts, and for the three-span bridge along with its associated walls and embankments. A draft report dated January 30, 2014, was submitted to the Town of Addison under our Project No. 137422. Shortly thereafter, the project was suspended, thus a sealed report was never issued. The project has since been reinstated and assigned to Kimley Horn & Associates (KHA) who requested additional geotechnical work for a detention pond. We understand that the design of the entire project will be performed by KHA (), and that the bridge structure will be designed in accordance with the Texas Department of Transportation (TxDOT) bridge design standards. We understand that retaining walls and embankments will not be constructed as part of the approaches to the aforementioned bridge. A detention pond is planned along the southern portion of the road and slope recommendations have been requested.

### 1.2 SITE DESCRIPTION

The Alpha Road Connector is located at the northeast quadrant of Brookhaven College to Bella Road and Alpha Road in Farmers Branch, Texas. The site is relatively flat and partially wooded with a creek running through the property.


© 2021 Kleinfelder

7805 Mesquite Bend Dr., Suite 100, Irving, TX 75063 **p |** 972.868.5009 **f |** 972.409.0008

## 1.3 PURPOSE AND SCOPE

This study was performed based on the Scope of Services presented in our proposal number 136796 dated October 11, 2013, and our proposal DFW20P110120), dated April 9, 2020. The purpose of our geotechnical study was to evaluate subsurface soil and groundwater conditions at the site to provide recommendations for use during design and construction of the proposed additions. To accomplish this purpose, we performed the following tasks:

- Drilled 4 bridge borings (3 borings to a depth of 80 feet and 1 boring to a depth of 60 feet), 4 pavement borings to a depth of 10 feet, 2 culvert borings to a depth of 25 feet below grade under the original scope of work, and 4 detention pond borings were drilled to a depths of 5.5 to 20 feet below ground service under the 2020 scope of work. Borings were drilled to obtain samples for visual evaluation, laboratory testing, and to observe subsurface conditions;
- Performed laboratory testing on select samples to evaluate soil/rock classification and to determine the generalized engineering properties of the subsurface soils and rock; and
- Performed engineering analyses using the collected data to develop geotechnical recommendations for the design and construction of the proposed bridge, culverts, and pavement.

This report is based on the project information provided to us by the Town of Addison and the original engineer of record, Nathan D. Maier Consulting Engineers, and KHA. If the project information differs from the descriptions contained in this report, we should be contacted to review our recommendations. It is possible that modification of our recommendations may be required based upon changes in the project.


© 2021 Kleinfelder

7805 Mesquite Bend Dr., Suite 100, Irving, TX 75063 **p |** 972.868.5009 **f |** 972.409.0008

# 2 FIELD EXPLORATION AND LABORATORY TESTING

## 2.1 FIELD EXPLORATION

Subsurface conditions were evaluated by drilling and sampling 10 borings with a truck-mounted drilling rig. Bridge borings B-01 through B-04 were drilled to depths of 60 to 80 feet below existing grade, pavement borings P-01 through P-04 were drilled to a depth of 10 feet below existing grade, and culvert borings C-01 and C-02 were drilled to a depth of 25 feet below existing grade. These boring were completed between October 29 and November 5, 2013. The approximate boring locations are presented on Figure 1, Exploration Location Plan and Vicinity Map Plan of Borings, in the Appendix. These original locations were staked by NDMCE.

Borings D-01 and D-02 were drilled on October 19, 2020, due to the addition of a detention pond on the southern portion of the proposed road. The borings were located in the field by Kleinfelder and drilled to depths of approximately 15 and 20 feet below existing grade.

Borings D-03 and D-04 were drilled on December 15, 2020, with a manual hand auger to evaluate soils within the detention pond as well as the depth of weathered limestone in the footprint of the detention pond. The borings were located in the field by Kleinfelder and drilled to depths of approximately 5.5 to 7 feet below existing grade.

Hollow stem augers, continuous flight augers and push sampling drilling techniques were used without drilling fluids within the clayey material. Rock and rock-like materials were collected with a NX size double-tube core barrel. Drilling fluid was introduced into the boring during coring operations.

When present, seepage and groundwater levels were recorded, as discussed in a following section. Bridge Borings B-01, B-02, and B-04 were left open overnight for a 24-hour water reading. At the completion of drilling or at the end of the 24-hour water reading, each boring was backfilled with auger cuttings up to and slightly above the existing ground surface in open areas.

A log of each boring is presented in the Appendix, along with a boring log key to the symbols and terms used on the logs (Figures 2 and 3). The logs indicate the material types, depths, and other details of materials encountered for each boring. Soil and rock descriptions presented


© 2021 Kleinfelder

7805 Mesquite Bend Dr., Suite 100, Irving, TX 75063 **p |** 972.868.5009 **f |** 972.409.0008

upon the boring logs resulted from a combination of field and laboratory test data. Stratigraphy lines correspond to the approximate boundary between strata. However, the in-situ subsurface transition can be, and is often gradual.

Relatively undisturbed samples of cohesive soils were collected by using the drilling rig to push a seamless steel Shelby tube sampler with an outside diameter of 3 inches into the soil (based upon ASTM D1587). The depths at which these samples were collected are indicated on the boring logs. After a tube was recovered, the sample was extruded in the field, examined, and logged. The sample was then sealed in a plastic bag to reduce moisture loss and protect the sample.

During logging, an estimate of the sample consistency was obtained using a pocket penetrometer. This test provides relative strength data that is used as an approximate indicator of shear strength. The result of the penetrometer reading was recorded at a corresponding depth on the boring logs. Note that a reported value of “4.5+” indicates that the capacity of the penetrometer device was exceeded.

Additionally, granular soils and weathered limestone samples were collected by driving a split-spoon sampler in conjunction with the Standard Penetration Test (SPT). This technique involves driving the spoon sampler a distance into the soil using a free-falling hammer (based upon ASTM D 1586). During the test, the logger records the number of blows required to drive the spoon sampler over three successive 6-inch increments. The first 6 inches is the “seating drive,” while the number of blows required to drive the sampler the last two 6-inch increments is the “penetration” in blows per foot. Where resistance was high, the number of inches of penetration for 50 blows of the hammer is recorded. When less than 6 inches of penetration is obtained, the test is terminated regardless of the drive increment. The results of the penetration test are reported on the boring log at the corresponding depth. Materials recovered from the split-spoon sampler are then placed in a plastic bag to protect the sample and to reduce moisture loss. The boreholes were backfilled with soil cutting upon completion of drilling.

Rock and rock-like materials were evaluated in place using the Texas Department of Transportation (TxDOT) cone penetrometer test. This test evaluates the shear strength of the tested material by driving a steel cone into the material using a free-falling hammer (based upon Method TEX 132-E). During the test, the logger recorded either the number of blows producing 12 inches of penetration or the total inches of penetration due to two successive applications of


© 2021 Kleinfelder

7805 Mesquite Bend Dr., Suite 100, Irving, TX 75063 **p |** 972.868.5009 **f |** 972.409.0008

50 blows, for a total of 100 blows. The results of the test were recorded on the boring logs at the corresponding test depth. The bridge borings were terminated based on TxDOT standards for bridge design, which requires 4 consecutive blow counts of 100 blows for 3 inches or better.

Samples of rock and/or rock-like materials were collected with an NX size double-tube core barrel fitted with a carbide bit. The lengths of core run and are recorded on the boring logs at the corresponding depth. Samples are removed from the core barrel in the field, field classified, sealed, and packaged for transportation for further examination and testing. Before packaging, the total length of the recovered sample is recorded and reported as a percentage of the total sample length (REC). The total length of all the pieces greater than four inches in length is also recorded as a percentage of the total sample length and reported as the rock quality designation (RQD). Core breaks obviously caused by the drilling process were fitted together and counted as a continuous piece. Breaks that were not easily distinguished as being a result of the drilling process were conservatively considered a natural break.

## 2.2 LABORATORY TESTING

Laboratory testing was performed on selected samples collected from the borings during drilling. These samples were selected as being generally representative of that stratum and/or boring(s). Testing was performed to allow for material classification according to the Unified Soil Classification System (ASTM D 2487), and to evaluate the engineering properties of the materials. These tests included:

- Moisture content;
- Dry unit weight;
- Atterberg limits (liquid and plastic limits);
- Percent passing No. 200 sieve;
- One-dimensional swell under approximate overburden load;
- Soluble sulfates;
- Lime vs pH series test; and
- Unconfined compressive strength of soil/rock.

The test results are presented at the corresponding depth on each boring log and Table 1, Laboratory Test Results Summary in the Appendix.


© 2021 Kleinfelder

7805 Mesquite Bend Dr., Suite 100, Irving, TX 75063 **p |** 972.868.5009 **f |** 972.409.0008

# 3 SUBSURFACE CONDITIONS

## 3.1 GEOLOGY

The Atlas maps published by the Bureau of Economic Geology at the University of Texas, Austin indicated that the site is located on border of the Austin Chalk and Eagle Ford geological formation. The Austin Chalk was encountered on the eastern part of the project at borings C-02 and P-01. The rest of the borings lie in the Eagle Ford Formation. The Austin Chalk formation typically consists of fat clays overlying lean, chalky clay, followed by the parent limestone bedrock. The thickness of the clay above the limestone varies but is generally encountered at a shallow depth. The dark brown fat clays are typically highly expansive, while the lean chalky clay is only moderately expansive. The upper portions of the limestone is generally weathered, fractured, and very light brown to light yellow brown in color. Some zones of severely weathered limestone that are clay-like can be present above the weathered material. The underlying primary limestone is generally harder than the weathered limestone and is light to medium gray in color.

The Eagle Ford formation typically includes residual clay and shaly clay overlying the primary shale that contains significant quantities of soluble sulfates. The clays and shaly clays of the Eagle Ford vary in color from dark brown to yellow brown, are highly expansive. The clays are often jointed; contain silt and sand seams/partings, and bentonite seams/layers. The primary shale is commonly gray to dark gray in color and is not as hard as most regional rock materials. The shale is often calcareous and can contain very hard limestone and sandstone seams. Soft bentonite seams and layers can also be present.

## 3.2 STRATIGRAPHY

The subsurface conditions, observed in our borings, consisted of are high plasticity clay (CH) and moderate plasticity clay (CL), overlying shale or weathered limestone and limestone. Detailed descriptions of the stratigraphy are included in the boring logs presented on Plates 4 through 14 in the Appendix.


© 2021 Kleinfelder

7805 Mesquite Bend Dr., Suite 100, Irving, TX 75063 **p |** 972.868.5009 **f |** 972.409.0008

## 3.3 GROUNDWATER OBSERVATIONS

The borings were advanced using techniques that allow for direct and indirect observations of seepage and groundwater during drilling operations. Groundwater was observed in two of the borings (B-01 and C-01) during drilling operations. All pavement borings were dry. These observations have been made during the course of this study, as indicated on the boring logs and Table 3.1.

**Table 3.1: Groundwater Observation**

| Boring | Depth to Groundwater below Existing Grade (feet) | | |
|---|---|---|---|
| | During Drilling | On completion of Drilling | After 24 hours |
| B-01 | 13 | 5 (water added for coring) | 5 |
| B-02 | Dry | 5 (water added for coring) | 13 |
| B-03 | Dry | 16 (water added for coring) | NA |
| B-04 | Dry | 6 (water added for coring) | Dry |
| C-01 | 5 | 4 | 6 |
| C-02 | Dry | Dry | NA |
| D-01 | Dry | Dry | NA |
| D-01 | Dry | Dry | NA |

The occurrence of groundwater can vary due to many factors. These factors include seasonal changes, site topography, surface runoff, the layering and permeability of subsurface strata; water levels in the creek, utilities, and other factors not evident at the time of this study. The possibility of groundwater and its fluctuation should be considered when developing this project. A groundwater study has not been performed. Long-term observations would be necessary to more accurately evaluate groundwater levels and fluctuations. We recommend that a test hole be drilled outside the footprint of the proposed bridge prior to the start of construction to establish the groundwater level at that time. This will enable the contractor to select the appropriate equipment to install the foundations.

## 3.4 EXPANSIVE SOIL CHARACTERISTICS

The subgrade at this site includes expansive soil that will exhibit shrink and swell behavior. The amount of shrink/swell behavior will depend upon moisture fluctuations that occur over the


© 2021 Kleinfelder

7805 Mesquite Bend Dr., Suite 100, Irving, TX 75063 **p |** 972.868.5009 **f |** 972.409.0008

design life of the structure. The total magnitude of the shrink/swell behavior is also dependent upon the thickness of the expansive soil and the depth of the active moisture zone. Moisture fluctuations occur due to seasonal cycles but can also be influenced to varying degrees by drainage conditions; site grades/sloping ground, landscaping, irrigation practices, the presence of vegetation, groundwater, and the presence of flatwork or other impervious barriers. This large number of variables complicates the evaluation of the magnitude of shrink/swell movements that could occur.

An estimate of the potential expansive soil movement was made using a variety of methods, including the Potential Vertical Rise (PVR) Method 124-E published by TxDOT, the results of laboratory index and swell testing, engineering judgment, and our experience. The estimated soil movement or Potential Vertical Movement (PVM) is summarized in Table 3.2.

**Table 3.2: Estimated Potential Soil Movement (PVM)**

| Location | Based on TxDOT Method (dry condition) |
|---|---|
| B-01 | 2.0 |
| B-02 | 3.5 |
| B-03 | 3.0 |
| B-04 | 3.5 |
| C-01 | 1.5 |
| C-02 | 1.0 |
| P-01 | 2.0 |
| P-02 | 3.0 |
| P-03 | 3.0 |
| P-04 | 1.0 |

Recognize these values are not exact values but are only an indication of the potential movements due to expansive soil for seasonal moisture fluctuations. Actual movements may be significantly larger than estimated due to inadequate site grading, poor drainage, ponding surface water, and/or leaks in utility lines. Significant changes to existing site grading can also alter actual vertical movements by changing the thickness of the expansive soil and/or altering the active moisture zone depth.


© 2021 Kleinfelder

7805 Mesquite Bend Dr., Suite 100, Irving, TX 75063 **p |** 972.868.5009 **f |** 972.409.0008

Selected plastic soils were also subjected to one-dimensional swell tests. These tests are summarized in Table 3.3. The swell and swell pressure values provided are based upon laboratory testing. Higher and lower values are possible in other areas of the structure.

**TABLE 3.3: SWELL TEST SUMMARY**

| Location | Depth (ft.) | Swell (%) | Load Applied (psf) | Swell Pressure (psf) |
|---|---|---|---|---|
| B-01 | 3.5-5 | 0.0 | 500 | NA |
| B-01 | 8-10 | 0.0 | 1000 | NA |
| B-02 | 3.5-5 | 7.7 | 500 | 31,500 |
| B-02 | 6.5-8 | 7.3 | 875 | 24,125 |
| B-03 | 3.5-5 | 6.9 | 500 | 24,500 |
| B-03 | 8-10 | 0.5 | 1,000 | NA |
| B-04 | 6.5-8 | 4.7 | 875 | 13,525 |
| C-01 | 8-10 | 0.0 | 1,000 | NA |


© 2021 Kleinfelder

7805 Mesquite Bend Dr., Suite 100, Irving, TX 75063 **p |** 972.868.5009 **f |** 972.409.0008

# 4 ANALYSIS AND RECOMMENDATIONS

Based on the results of our evaluation, in our professional opinion, the project site can be developed for the proposed structure using conventional grading and foundation construction techniques, provided that the recommendations presented herein are incorporated into the design and construction of the project. The primary geotechnical concern for this project is the presence of inconsistent and highly expansive clay soils. Recommendations addressing expansive clay soils, as well as general recommendations regarding geotechnical aspects of the project design and construction, are presented below.

## 4.1 BRIDGE STRUCTURE

### 4.1.1 Drilled Shaft Foundations

Borings B-01 through B-4 were drilled for the bridge structure. The shafts should be straight-sided, steel reinforced concrete, and designed based on the recommendations presented in Table 4.1.

**Table 4.1: Drilled Shaft Design Values**

| Design Item | Design Value |
|---|---|
| Shaft type | Auger-excavated and straight-sided |
| Bearing Stratum Description | Gray Shale |
| Approximate Bearing Stratum Depth | 19 to 25 feet below existing grade |
| Minimum Penetration | 12 feet into bearing stratum for bridge (2) |
| Maximum Allowable Bearing Pressure | 12,000 psf (1) |
| Maximum Allowable Side Shear Within Bearing Stratum | 1,000 psf (for axial downward and upward resistance) (1) |
| Minimum Shaft Diameter | 24 inches |
| Need for Temporary Steel Casing During Installation | Should be Anticipated |
| Uplift Pressure due to expansive clays | 1,200 psf over 10 feet |

Note: (1) A factor of safety of 3 was used to evaluate allowable bearing pressure and for side shear.
(2) The actual penetrations will need to be determined by the project structural engineer during structural design.


© 2021 Kleinfelder

7805 Mesquite Bend Dr., Suite 100, Irving, TX 75063 **p |** 972.868.5009 **f |** 972.409.0008

Straight drilled reinforced concrete shafts will use a combination of end bearing and side resistance in developing their load carrying capacity. Where temporary casing is required, no side resistance should be considered above the bottom of the casing. Foundations designed based on these values should experience minor settlement due to loading when properly constructed, but we recommend that the design account for one-half inch of potential settlement. Because of potential variations in the depth of the bearing material, the depth of the shafts should be based upon the recommended penetration into the bearing stratum, and not upon a predetermined elevation. We recommend that Kleinfelder be present during construction to observe the penetration into the bearing material.

The expansive subgrade will subject the shafts to uplift pressures and will create tensile forces within the shafts. Accordingly, each shaft should be steel reinforced to withstand these forces. The actual uplift forces will vary with depth and moisture condition, but steel reinforcement design for the soil uplift pressures may be modeled using 1,200 psf acting over the entire shaft perimeter of the upper 10 feet of the shaft., This reinforcement should not preclude the need for additional reinforcement due to structural design or as required by appropriate codes. It is important to note that the uplift pressure provided is due to expansive soils and does not consider other pressures such as wind, impact, etc. Resistance to structural uplift loads should be evaluated using the values provided in Table 4.1.

### 4.1.2 Drilled Shaft Construction Considerations

We recommend that Kleinfelder monitor drilled shaft construction to observe the followings:

- the proper identification of bearing material;
- that adequate penetration of the shaft excavation into the bearing layer is provided;
- that the base and sides of the shaft excavation are clean of loose cuttings; and
- that if seepage is encountered, whether it is of sufficient amount to require the use of temporary steel casing for straight-sided shafts.

Note that these items and the following discussion are intended to benefit the Owner and maintain the intent of the design during construction. This discussion is not intended to prescribe a specific means and methods for construction.


© 2021 Kleinfelder

7805 Mesquite Bend Dr., Suite 100, Irving, TX 75063 **p |** 972.868.5009 **f |** 972.409.0008

Seepage and groundwater were observed in borings B-01 and C-01, at the site during this study. If seepage occurs during construction, temporary steel casing may be required. If casing is used, the casing should be advanced 2 to 3 feet into the shale stratum to establish an impermeable seal. A continuous head of plastic concrete should be maintained within the casing during casing extraction to prevent the caving of the excavation and/or inflow of groundwater.

The concrete placement should occur as soon as possible after completion of the excavation and observation of the shaft, and no longer than 8 hours after completion of the excavation. Prolonged air exposure or inundation of the bearing surface with groundwater could deteriorate the bearing material. Shaft excavations should be deepened if delays occur to provide a suitable bearing surface. Kleinfelder should be contacted in this event to provide appropriate recommendations.

Some intervals of the limestone within the shale stratum are hard. This limestone can be difficult to penetrate, especially when drilling large diameter shafts. The drilled shaft excavations should be performed with hard rock drilling equipment suitable to perform this work by a contractor experienced in this area.

Precautions are required during reinforcing steel and concrete placement to prevent loose soil, rock, and debris from falling into the excavation. The concrete should not be allowed to strike the reinforcing cage or the sides of the excavation during placement. A tremie pipe can prevent this occurrence. Mushrooming of the drilled shaft near or at the surface should not be allowed to prevent the formation of a horizontal surface that will be subject to expansive uplift pressures.

### 4.1.3 LPILE Parameters (version 2019) for Soil and Rock

The LPILE parameters provided below are for the subsurface material encountered in the Borings B-01 through B-04. The depths of each layer can be generalized from the boring log. The Stiff Clay w/o water soil type parameter was used for the CH, CL, and Weathered Shale soils encountered in the borings. Tables 4.2 and 4.3 provide Lpile parameters for soil and rock.


© 2021 Kleinfelder

7805 Mesquite Bend Dr., Suite 100, Irving, TX 75063 **p |** 972.868.5009 **f |** 972.409.0008

**Table 4.2 – Lpile Parameters for Soil**

| Soil Type | Cohesion, psf | Friction Angle | Unit Wt, pcf(1) | $\varepsilon_{50}/k_{rm}$ |
|---|---|---|---|---|
| Neglect 0 - 3 feet | --- | --- | --- | --- |
| Stiff Clay w/o water (above water table) | 2,500 | --- | 124 | 0.0055 |
| Stiff Clay w/o water (below water table) | 1,500 | --- | 124 | 0.007 |

(1) Represents total unit weight. In conditions where soils are below the water table, submerged unit weights should be used. Submerged unit weight is obtained by subtracting the unit weight of water (62.4 pcf) from the total unit weight.

**Table 4.3 – Lpile Parameters for Rock**

| Lpile Rock Type | Uniaxial Compressive strength, psi | Initial Modulus of Rock Mass, psi | RQD, % | Unit Wt, pcf(1) | $K_{rm}$ |
|---|---|---|---|---|---|
| Weak Rock (Shale) | 90 | 800 | 50 | 137 | 0.0007 |

(1) Unit weights represent total unit weights. In conditions where soils are below the water table, submerged unit weights should be used.

### 4.1.4 Soluble Sulfates

Concrete that comes into contact with soils can be subject to sulfate attack. We measured soluble sulfate concentrations in 5 samples from this site. Concentrations were measured between 0.01 to 0.58 percent, with one sample having sulfate concentrations greater than 0.2 percent and four samples with concentrations less than 0.2 percent. Water-soluble sulfate concentrations of 0.2 percent or greater indicate Class 2 severe sulfate exposure, and concentrations of 0.1 percent to 0.2 percent indicate moderate sulfate exposure, according to the American Concrete Institute (ACI). For sites with Class 2 sulfate exposure, ACI recommends using a cement meeting the requirements for Type V (sulfate resistant) cement or the equivalent, with a maximum water-to-cementitious material ratio of 0.45 and air entrainment of 5 to 7 percent. We understand Type V cement may not be readily available. As alternative ACI allows a blend of any type of Portland cement and fly ash (Class F) that meets the performance requirements (ASTM C 1012) of ACI 201.


© 2021 Kleinfelder

7805 Mesquite Bend Dr., Suite 100, Irving, TX 75063 **p |** 972.868.5009 **f |** 972.409.0008

## 4.2 PAVEMENT RECOMMENDATIONS

### 4.2.1 Pavement Thickness

The pavement thickness calculation for the new rigid pavement section was performed using Pavement Analysis Software (WinPAS), Version 1.0.4, which is based on the AASHTO pavement design procedures. Values used in the analysis of the pavement capacity are as follows:

- 85% Reliability
- 0.35 Overall (Standard) Deviation
- 3,500 (psi) Concrete compressive strength at 28 days
- 3,694,022 psi Concrete Modulus of Elasticity
- 3.2 Load Transfer Coefficient (assumes the use of load transfer dowels across joints and tied shoulders)
- 256 psi/in Modulus of Subgrade Reaction (assumes treated subgrade)
- 1.1 Drainage Coefficient (assumes slow, positive drainage)
- 4.2 Initial Serviceability
- 2.5 Terminal Serviceability

These values were selected based upon guidance in the AASHTO and TxDOT pavement design guides, local experience, and engineering judgment.

Traffic information for pavement design was based on estimates from 2008 average weekday traffic on the City of Farmers Branch, Traffic Engineering Division website. If more accurate traffic information is available then we should be contacted to review the pavement section and revise our recommendations, if necessary. The recommended pavement is intended to provide a sufficient thickness of structural materials, such that wheel loads are widely distributed. Based upon this assumption, we recommend a minimum 6 inches of reinforced concrete pavement and 8 inches of lime stabilized subgrade below the concrete.

We understand the City of Farmers Branch prefers a pavement section consisting of 8 inches of Portland cement concrete over a moisture conditioned clay subgrade. While this pavement section is structurally sufficient for the anticipated traffic loads, it is our opinion that removing the


© 2021 Kleinfelder

7805 Mesquite Bend Dr., Suite 100, Irving, TX 75063 **p |** 972.868.5009 **f |** 972.409.0008

lime stabilized portion of the pavement section can lead to premature subgrade failures. The lime stabilized subgrade provides a consistent subgrade, reduces surface moisture infiltration, and provides a stable working platform for the paving contractor, particularly during wetter portions of the year.

An estimated PVR on the order of 2 to 4 inches was calculated for the subsurface material encountered in the pavement borings. While the pavement may be structurally adequate, it can still experience cracking and movement due to the expansive subgrade. Please note that the purpose of lime stabilizing the pavement subgrade is to increase its strength and to increase its permeability/porosity, not to reduce its post-construction swell potential. Post-construction heave can be mitigated by excavating, moisture conditioning and compacting the native clays soils during construction. Kleinfelder can provide recommendations for over-excavation, if desired, based upon the movement criteria established by the Town of Addison and the City of Farmers Branch.

The residual soils of the Eagle Ford formation typically contain high concentrations of soluble sulfates. When mixed with hydrated lime, the sulfates can react with the free calcium, forming the mineral ettringite. This reaction is typically highly expansive and can cause significant distress to the stabilized subgrade and pavement. This reaction can be mitigated by removal and replacement of the sulfate bearing soils, extending the mellowing time during the stabilization process, and double lime application techniques. Prior to the lime application process, we recommend the subgrade soils within the Eagle Ford zone be sampled at approximate 250-foot intervals and tested for soluble sulfate concentrations. Once the concentration level is established, an effective mitigation plan can be recommended. We recommend the construction contract provide provisions for removal and replacement of subgrade soils, extended mellowing periods, and double lime application techniques.

Due to the presence of softer material at the site, continuous proof rolling should be used to detect areas of soft and/or pumping soil. Proof rolling should be based upon TxDOT Standard Specification Item 216 and performed using a heavy tired vehicle weighing at least 25 tons, with the tires inflated to the manufacturer's specified operating pressure. The entire area should be proof rolled, with each succeeding pass offset by not greater than one tire width. Proof rolling should be performed within the pavement area, and also within flatwork areas, such as sidewalks, pads, etc. Kleinfelder should be present during proof rolling activities to assist with


© 2021 Kleinfelder

7805 Mesquite Bend Dr., Suite 100, Irving, TX 75063 **p |** 972.868.5009 **f |** 972.409.0008

the identification of unsuitable soil. Unsuitable soil should be undercut and reworked, or otherwise improved in a manner that is suitable to the engineer. When fill is planned, proof rolling should occur before the fill is placed. After proof rolling, and before fill placement, the subgrade should be scarified to a depth of 8 inches, and recompacted to the specified density and moisture content.

### 4.2.2 Pavement Subgrade Preparation

Subgrade soils at this site in the proposed pavement areas consist of dark brown to olive brown clay. Based on the results of laboratory testing, the subgrade performance of the on-site can be improved by stabilization with hydrated lime.

### 4.2.3 Pavement Material Specifications

The following pavement material specifications are based on Texas Department of Transportation's (TxDOT) 2014 Edition Standard Specifications.

- Portland Cement Concrete - TxDOT Item 360 - Concrete with a minimum 28-day compressive strength of 3,500 psi is recommended. Concrete should be reinforced and include load transfer dowels at joints. Concrete should include air entrainment to increase temperature resistance.
- Lime Stabilized Subgrade - TxDOT Item 260 except as modified herein. Apply and mix hydrated lime at an estimated application rate of 7 percent (42 lbs/sq.yd.) hydrated lime for an 8-inch stabilization depth. The application rate of hydrated lime should be verified during construction by performing lime series tests with the lime proposed by the contractor. The lime series should include pH (12.4 target) percent swell (less than 1 percent under a confining pressure of 150 psf after curing) and compressive strength (minimum of 150 psi after curing for 5 days at 100 degrees Fahrenheit) The well mixed material should be mellowed for a minimum of 3 days, remixed, moisture conditioned and compacted to a minimum of 95 percent of ASTM D 698 (Standard Proctor density) at 2 to 5 percentage points above the optimum moisture content. Stabilization of the subgrade should extend at least one foot outside the perimeter of the pavement.


© 2021 Kleinfelder

7805 Mesquite Bend Dr., Suite 100, Irving, TX 75063 **p |** 972.868.5009 **f |** 972.409.0008

## 4.3 ADDITIONAL DESIGN CONSIDERATIONS

### 4.3.1 Box Culvert

We understand that construction of two box culverts are planned for the site. One will be located west of Alpha Road and the other located at the road next to Brookhaven College. The subsurface conditions vary greatly between the two culverts. Boring C-01 located next to Brookhaven College encountered subsurface conditions of dark brown, olive brown to yellow brown clay and groundwater at 5 feet. This culvert at Boring C-01 may utilize an allowable bearing pressure of 1,500 psf. Boring C-02 located next to Alpha Road encountered dark brown to light brown clay, underlain by weathered limestone and limestone. This culvert at Boring C-02 may utilize an allowable bearing pressure of 2,000 psf.

### 4.3.2 Wall Structures

Reinforced concrete walls related to the bridge construction should be supported by drilled shafts. The drilled shaft recommendations provided for the bridge structure should be used for designing the drilled shafts to support the wing walls or other walls related to the bridge construction. Where the wall bottoms are supported on drilled shafts, wall bottoms should be isolated from the underlying clay by minimum 8-inch voids. Retainers should be provided to prevent sloughing and caving of soils into the voids. The following design parameters and considerations are presented for design of the walls subject to lateral earth pressures.

### 4.3.3 Wall Outfall

The concrete cantilever gravity walls planned around the detention pond will have an outfall that should be supported by spread footings. We recommend footings be designed for a net allowable soil bearing pressure of 1,500 pounds per square foot (psf) for dead plus sustained live loads. Footings should be embedded at least 24 inches below the lowest adjacent grade. Additional embedment for uplift resistance shall be determined by the structural engineer. All footings should bear on native stiff clay soils. The footing dimension and reinforcement should be designed by the structural engineer; however, continuous, and isolated spread footings should have minimum widths of 18 and 24 inches, respectively. A one-third increase in the above bearing pressures can be used for transient wind or seismic loads. Footings should be


© 2021 Kleinfelder

7805 Mesquite Bend Dr., Suite 100, Irving, TX 75063 **p |** 972.868.5009 **f |** 972.409.0008

backfilled as soon as practical after concrete placement. An allowable coefficient of friction of 0.24 between the base of the footings and the native soils can be used for sliding resistance using the dead load normal stresses.

### 4.3.4 Lateral Earth Pressures

The lateral earth pressures on the retaining walls and culvert will depend on the restraint conditions of the walls, type of backfill, surcharge pressure, and hydrostatic pressure potential. Depending on the wall type, the design condition could be active or at-rest. If the walls are constructed to be restrained at the top, thus the at-rest ($K_o$) earth pressure coefficient will be developed. Active pressures will apply for walls that are allowed to rotate. Coefficients of active earth pressure and earth pressure at rest are provided in Table 4.4 and may be used for horizontal backfill.

**TABLE 4.4: EARTH PRESSURE CRITERIA**

| Material | Earth Pressure Condition | Equivalent Fluid Pressure, pcf | |
|---|---|---|---|
| | | Drained Condition | Undrained Condition |
| Compacted, On-site Site Soil $\phi$=19°, $\gamma_t$=125 pcf | At-rest, $K_o$ = 0.67 | 84 | 105 |
| | Active, $K_a$ = 0.51 | 64 | 94 |
| Granular/Select Fill $\phi$=28°, $\gamma_t$=120 pcf | At-rest, $K_o$ = 0.53 | 64 | 93 |
| | Active, $K_a$ = 0.36 | 43 | 83 |

The above values do not include the effect of hydrostatic pressures or lateral pressures induced by surface loads, which must be taken into account by the structural engineer. Subsurface drain systems must be included in the design to prevent hydrostatic build-up behind the walls. The preceding recommendations assume that the backfill material between the wall and excavation face consists of fine-graded and coarse-graded drainage material meeting the specifications listed in the following section. The above lateral pressures do not include any surcharge loads such as traffic loads, which could be applied behind the top of the wall. Sloping ground surface behind the tops of walls or surcharge loads behind the walls will increase lateral earth pressures. Appropriate factors of safety must be used.


© 2021 Kleinfelder

7805 Mesquite Bend Dr., Suite 100, Irving, TX 75063 **p |** 972.868.5009 **f |** 972.409.0008

### 4.3.5 2018 IBC Seismic Design Parameters

Based on information obtained from the borings, published geologic literature and maps, and on our interpretation of the 2018 IBC criteria, it is our opinion that the project site may be classified as Site Class C according to Section 1613.2.2 of 2018 IBC and Chapter 20 of ASCE 7. Approximate coordinates for the site are noted below. Accordingly, seismic design parameters for Site Class C have been provided for the 2018 IBC.

- Latitude: 32.93200 °N
- Longitude: -96.84802 °W

The Risk-Targeted Maximum Considered Earthquake ($MCE_R$) mapped spectral accelerations for 0.2 seconds and 1 second periods ($S_s$ and $S_1$) were estimated using Section 1613.2.1 of the 2018 IBC and the SEAOC and OSHPD website that uses the U.S. Geological Survey (USGS) web services (available at http://seismicmaps.org). The mapped acceleration values and associated soil amplification factors ($F_a$ and $F_v$) based on the USGS Hazard Data and corresponding site modified spectral accelerations ($S_{MS}$ and $S_{M1}$) and design spectral accelerations ($S_{DS}$ and $S_{D1}$) are presented in Table 4.5.

**Table 4.5**
**2018 IBC Seismic Design Parameters**

| Design Parameter | Recommended Value |
|---|---|
| Site Class | C |
| $S_s$ (g) | 0.104 |
| $S_1$ (g) | 0.055 |
| $F_a$ | 1.3 |
| $F_v$ | 1.5 |
| $S_{MS}$ (g) | 0.135 |
| $S_{M1}$ (g) | 0.083 |
| $S_{DS}$ (g) | 0.09 |
| $S_{D1}$ (g) | 0.055 |


© 2021 Kleinfelder

7805 Mesquite Bend Dr., Suite 100, Irving, TX 75063 **p |** 972.868.5009 **f |** 972.409.0008

### 4.3.6 Utility and Service Lines

Utility lines along the sidewalk or roadway may experience differential movement in response to expansive soil movements. These movements may damage connections. Flexible connections are recommended to account for differential movement between the lighting and utilities.

Design and construction of the utilities must also consider other expansive soil issues in order to limit damage. Excavations should be sloped so that water within excavations will flow to a low point away from the roadway where it can be removed before backfilling. Compaction of bedding material should not be water-jetted. Compacted backfill above the utilities should be on-site clays to limit the percolation of surface water. Utility trenches extending under structures should include fat clay or concrete cut-off collars at the perimeter/edge to prevent the transmission of water along trench lines.

### 4.3.7 Detention Pond Slopes

Borings D-01 and D-02 indicate the detention pond side slopes will consist of very high plasticity clay soils. As such we recommend a target slope of 4 horizontal to 1 vertical (4H:1V) if space allows, but in no case should be less than 3H:1V. The side slopes should be well vegetated for erosion mitigation; however, routine maintenance may be required to repair shallow skin slides caused by cyclic wetting and drying.


© 2021 Kleinfelder

7805 Mesquite Bend Dr., Suite 100, Irving, TX 75063 **p |** 972.868.5009 **f |** 972.409.0008

# 5 EARTHWORK

## 5.1 SITE PREPARATION

The project sites should be stripped of vegetation, roots, organic material, existing construction materials (if present) and other undesirable debris. Obstructions that could hinder preparation of the sites should also be removed, with special attention given to tree stumps and associated root systems. A typical stripping depth is about 6 inches, but the actual depth will vary and should be based on field observations. After stripping, the area should be suitable for the support of construction equipment. Unsuitable areas (such as those with wet, soft, yielding, and/or pumping subgrade) should be corrected before construction proceeds.

We recommend proof rolling be used to detect areas of soft and/or pumping soil in the proposed roadway. Proof rolling should be based upon TxDOT Standard Specification Item 216 and performed using a heavy tired vehicle weighing at least 25 tons, with the tires inflated to the manufacturer's specified operating pressure. The entire roadway area should be proof rolled at the final subgrade level, with each succeeding pass offset by not greater than one tire width. Kleinfelder can provide construction observation services during proof rolling activities to assist with the identification of unsuitable soil. Unsuitable soil should be undercut and reworked, or otherwise improved in a manner that is suitable to the engineer. When fill is planned, proof rolling should occur before the fill is placed. After proof rolling, and before fill placement, the subgrade should be scarified to a depth of 8 inches, and recompacted to the specified density and moisture content.

## 5.2 MATERIAL REQUIREMENTS AND TESTING

Table 5.1 provides material, moisture, and density requirements for a variety of materials and applications. Compaction of each lift should be continuous over its entire area. The maximum allowable aggregate size for these materials is 2 inches (except for crushed limestone, which should be limited to 1½ inches). Fill should be placed in loose horizontal lifts not exceeding 8 inches, with the intent of providing a compacted lift thickness of 6 inches. When crushed limestone is used, the maximum loose lift thickness should be reduced to 6 inches (or less if there is difficulty achieving compaction). Fill placed along slopes should be placed in horizontal lifts that are benched into the slope.


© 2021 Kleinfelder

7805 Mesquite Bend Dr., Suite 100, Irving, TX 75063 **p |** 972.868.5009 **f |** 972.409.0008

**Table 5.1 - Material and Compaction Requirements**

| Material Use | Material Requirements | Proctor Test Method | [1]Density Requirement | [1]Moisture Requirement |
|---|---|---|---|---|
| "Low-expansive" Select Fill: | PI: 7 to 15, LL≤35<br>Passing #200 Sieve: ≤70%<br>Organics < 2 % | ASTM D 698 | 95 % minimum | -1 to +3 % |
| Native Clay Soils | NA | ASTM D 698 | 94 % minimum | +2 to +6 % |
| Lime Stabilized Subgrade: Pavement | TxDOT Item 260<br>Organics < 2 % | ASTM D 698 | 95 % minimum | +2 to +5 % |

[1] Based upon Maximum Dry Density and Optimum Moisture Content

Prior to placing any fill material, the exposed subgrade should be scarified to a depth of 8 inches; moisture conditioned and compacted per the requirements for moisture conditioned on-site soil provided in Table 5.1. The material should be a consistent with regard to type and moisture content. Clods should be processed and mixed, and water should be evenly applied, so that each lift has a uniform moisture and density. Each lift should be tested to confirm it has the specified moisture and compaction. One moisture/density test should be performed for every 5,000 square feet per lift of compacted area. For smaller areas, a minimum of three tests should be provided for every lift. Subsequent lifts should not be placed until the exposed lift has the specified moisture and density. Lifts failing to meet the moisture and density requirements should be reworked to meet the required specifications.

The specified moisture content must be maintained until compaction of the overlying lift, or construction of overlying flatwork. Failure to maintain the moisture content could result in excessive soil movement and can also have a detrimental effect on overlying plastic concrete. The contractor must provide some means of controlling the moisture content (such as water hoses, water trucks, etc.). Maintaining subgrade moisture is always critical, but will require the most effort during warm, windy and/or sunny conditions. Density and moisture testing is recommended to provide an indication that adequate earthwork is being provided. However, the quality of the fill is the sole responsibility of the contractor. Satisfactory verification testing is not a guarantee of the quality of the contractor's earthwork operations.


© 2021 Kleinfelder

7805 Mesquite Bend Dr., Suite 100, Irving, TX 75063 **p |** 972.868.5009 **f |** 972.409.0008

# 6 LIMITATIONS

This work was performed in a manner consistent with the level of care and skill ordinarily exercised by other members of Kleinfelder's profession practicing in the same locality, under similar conditions and at the date the services are provided. Our conclusions, opinions and recommendations are based on a limited number of observations and data. It is possible that conditions could vary between or beyond the data evaluated. Kleinfelder makes no other representation, guarantee or warranty, express or implied, regarding the services, communication (oral or written), report, opinion, or instrument of service provided.

This report may be used only by the Client and the registered design professional in responsible charge and only for the purposes stated for this specific engagement within a reasonable time from its issuance, but in no event later than two (2) years from the date of the report.

The work performed was based on project information provided by Client. If Client does not retain Kleinfelder to review any plans and specifications, including any revisions or modifications to the plans and specifications, Kleinfelder assumes no responsibility for the suitability of our recommendations. In addition, if there are any changes in the field to the plans and specifications, Client must obtain written approval from Kleinfelder's engineer that such changes do not affect our recommendations. Failure to do so will vitiate Kleinfelder's recommendations.

Recommendations contained in this report are based on our field observations and subsurface explorations, limited laboratory tests, and our present knowledge of the proposed construction. It is possible that soil, rock, or groundwater conditions could vary between or beyond the points explored. If soil, rock, or groundwater conditions are encountered during construction that differ from those described herein, the client is responsible for ensuring that Kleinfelder is notified immediately so that we may reevaluate the recommendations of this report. If the scope of the proposed construction, including the traffic estimates, and the design depths or locations of the foundations, changes from that described in this report, the conclusions and recommendations contained in this report are not considered valid unless the changes are reviewed, and the conclusions of this report are modified or approved in writing, by Kleinfelder.


© 2021 Kleinfelder

7805 Mesquite Bend Dr., Suite 100, Irving, TX 75063 **p |** 972.868.5009 **f |** 972.409.0008

As the geotechnical engineering firm that performed the geotechnical evaluation for this project, Kleinfelder should be retained to confirm that the recommendations of this report are properly incorporated in the design of this project, and properly implemented during construction. This may avoid misinterpretation of the information by other parties and will allow us to review and modify our recommendations if variations in the soil conditions are encountered. As a minimum Kleinfelder should be retained to provide the following continuing services for the project:

- Review the project plans and specifications, including any revisions or modifications;
- Observe foundation bearing soils to confirm conditions are as anticipated.

This report, and any future addenda or reports regarding this site, may be made available to bidders to supply them with only the data contained in the report regarding subsurface conditions and laboratory test results at the point and time noted. Bidders may not rely on interpretations, opinion, recommendations, or conclusions contained in the report. Because of the limited nature of any subsurface study, the contractor may encounter conditions during construction which differ from those presented in this report. In such event, the contractor should promptly notify the owner so that Kleinfelder's geotechnical engineer can be contacted to confirm those conditions. We recommend the contractor describe the nature and extent of the differing conditions in writing and that the construction contract include provisions for dealing with differing conditions. Contingency funds should be reserved for potential problems during earthwork and foundation construction.


© 2021 Kleinfelder

7805 Mesquite Bend Dr., Suite 100, Irving, TX 75063 **p |** 972.868.5009 **f |** 972.409.0008

KLEINFELDER
Bright People. Right Solutions.

# Figures

PLOTTED: 7/13/2021 9:42:49 AM BY: GAnderson

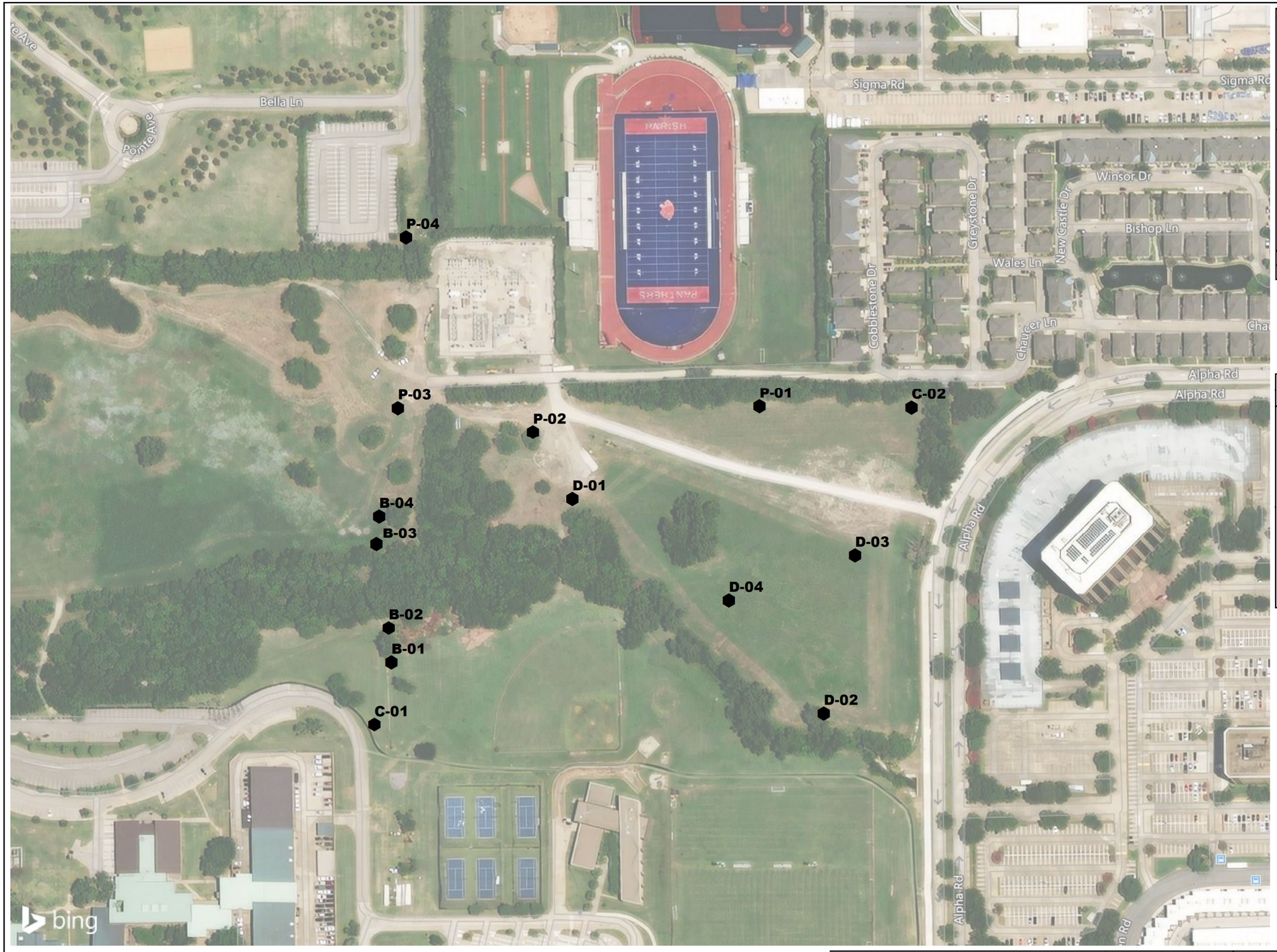





VICINITY MAP

NOT TO SCALE

NOTE:
BASE MAPPING AND VICINITY MAP CREATED FROM LAYERS COMPILED BY ESRI PRODUCTS AND 2021 MICROSOFT CORPORATION.
COORDINATE SYSTEM: NAD 1983 2011 STATEPLANE TEXAS NORTH CENTRAL FIPS 4202

LEGEND

SOIL BORING

N

0 200 400

1 " = 200 SCALE IN FEET

The information included on this graphic representation has been compiled from a variety of sources and is subject to change without notice. Kleinfelder makes no representations or warranties, express or implied, as to accuracy, completeness, timeliness, or rights to the use of such information. This document is not intended for use as a land survey product nor is it designed or intended as a construction design document. The use or misuse of the information contained on this graphic representation is at the sole risk of the party using or misusing the information.

KLEINFELDER
Bright People. Right Solutions.

PROJECT NO. 20212439.001A
DRAWN BY: DM
CHECKED BY: RH
DATE: 07-13-2021

EXPLORATION LOCATION PLAN AND VICINITY MAP

Alpha Road Connector - Vitruvian Phase I
Brookhaven Community College
Farmers Branch, Texas

FIGURE 1

GIS FILE PATH: \\azrgisstorp01\Working_clients_Automated_Exploration Plans

KLEINFELDER

*Bright People. Right Solutions.*

# Appendix A

## SAMPLE/SAMPLER TYPE GRAPHICS



Auger Sample

NX CORE SAMPLE
(2.154 in. (54.7 mm.) core diameter)

SHELBY TUBE SAMPLER

STANDARD PENETRATION SPLIT SPOON SAMPLER
(2 in. (50.8 mm.) outer diameter and 1-3/8 in. (34.9 mm.) inner diameter)

TEXAS CONE PENETRATION

## GROUND WATER GRAPHICS

WATER LEVEL (level where first observed)

WATER LEVEL (level after exploration completion)

WATER LEVEL (additional levels after exploration)

OBSERVED SEEPAGE

## NOTES

1. The report and log key are an integral part of these logs. All data and interpretations in this log are subject to the explanations and limitations stated in the report.

2. Lines separating strata on the logs represent approximate boundaries only. Actual transitions may be gradual or differ from those shown.

3. No warranty is provided as to the continuity of soil or rock conditions between individual sample locations.

4. Logs represent general soil or rock conditions observed at the point of exploration on the date indicated.

5. In general, Unified Soil Classification System designations presented on the logs were based on visual classification in the field and were modified where appropriate based on gradation and index property testing.

6. Fine grained soils that plot within the hatched area on the Plasticity Chart, and coarse grained soils with between 5% and 12% passing the No. 200 sieve require dual USCS symbols, ie., GW-GM, GP-GM, GW-GC, GP-GC, GC-GM, SW-SM, SP-SM, SW-SC, SP-SC, SC-SM.

7. If sampler is not able to be driven at least 6 inches, 50/X indicates number of blows required to drive the identified sampler X inches with a 140 pound hammer falling 30 inches.

8. TCP-Texas Cone Penetrometer, a 3 inches diameter by 2.5 inches inch long 60 degree conical point driven with a 170 ±2 pound hammer dropped 24 ±0.5 inches.

## UNIFIED SOIL CLASSIFICATION SYSTEM (ASTM D 2487)

| | | | | | | |
|---|---|---|---|---|---|---|
| **COARSE GRAINED SOILS** (More than half of material is larger than the #200 sieve) | **GRAVELS** (More than half of coarse fraction is larger than the #4 sieve) | CLEAN GRAVEL WITH <5% FINES | Cu ≥4 and 1≤ Cc≤3 | | **GW** | WELL-GRADED GRAVELS, GRAVEL-SAND MIXTURES WITH LITTLE OR NO FINES |
| | | | Cu <4 and/ or 1>Cc >3 | | **GP** | POORLY GRADED GRAVELS, GRAVEL-SAND MIXTURES WITH LITTLE OR NO FINES |
| | | GRAVELS WITH 5% TO 12% FINES | Cu ≥4 and 1≤ Cc≤3 | | **GW-GM** | WELL-GRADED GRAVELS, GRAVEL-SAND MIXTURES WITH LITTLE FINES |
| | | | | | **GW-GC** | WELL-GRADED GRAVELS, GRAVEL-SAND MIXTURES WITH LITTLE CLAY FINES |
| | | | Cu <4 and/ or 1>Cc >3 | | **GP-GM** | POORLY GRADED GRAVELS, GRAVEL-SAND MIXTURES WITH LITTLE FINES |
| | | | | | **GP-GC** | POORLY GRADED GRAVELS, GRAVEL-SAND MIXTURES WITH LITTLE CLAY FINES |
| | | GRAVELS WITH > 12% FINES | | | **GM** | SILTY GRAVELS, GRAVEL-SILT-SAND MIXTURES |
| | | | | | **GC** | CLAYEY GRAVELS, GRAVEL-SAND-CLAY MIXTURES |
| | | | | | **GC-GM** | CLAYEY GRAVELS, GRAVEL-SAND-CLAY-SILT MIXTURES |
| | **SANDS** (More than half of coarse fraction is smaller than the #4 sieve) | CLEAN SANDS WITH <5% FINES | Cu ≥6 and 1≤ Cc≤3 | | **SW** | WELL-GRADED SANDS, SAND-GRAVEL MIXTURES WITH LITTLE OR NO FINES |
| | | | Cu <6 and/ or 1>Cc >3 | | **SP** | POORLY GRADED SANDS, SAND-GRAVEL MIXTURES WITH LITTLE OR NO FINES |
| | | SANDS WITH 5% TO 12% FINES | Cu ≥6 and 1≤ Cc≤3 | | **SW-SM** | WELL-GRADED SANDS, SAND-GRAVEL MIXTURES WITH LITTLE FINES |
| | | | | | **SW-SC** | WELL-GRADED SANDS, SAND-GRAVEL MIXTURES WITH LITTLE CLAY FINES |
| | | | Cu <6 and/ or 1>Cc >3 | | **SP-SM** | POORLY GRADED SANDS, SAND-GRAVEL MIXTURES WITH LITTLE FINES |
| | | | | | **SP-SC** | POORLY GRADED SANDS, SAND-GRAVEL MIXTURES WITH LITTLE CLAY FINES |
| | | SANDS WITH > 12% FINES | | | **SM** | SILTY SANDS, SAND-GRAVEL-SILT MIXTURES |
| | | | | | **SC** | CLAYEY SANDS, SAND-GRAVEL-CLAY MIXTURES |
| | | | | | **SC-SM** | CLAYEY SANDS, SAND-SILT-CLAY MIXTURES |

| | | | |
|---|---|---|---|
| **FINE GRAINED SOILS** (More than half of material is smaller than the #200 sieve) | SILTS AND CLAYS (Liquid Limit less than 50) | **ML** | INORGANIC SILTS AND VERY FINE SANDS, SILTY OR CLAYEY FINE SANDS, SILTS WITH SLIGHT PLASTICITY |
| | | **CL** | INORGANIC CLAYS OF LOW TO MEDIUM PLASTICITY, GRAVELLY CLAYS, SANDY CLAYS, SILTY CLAYS, LEAN CLAYS |
| | | **CL-ML** | INORGANIC CLAYS-SILTS OF LOW PLASTICITY, GRAVELLY CLAYS, SANDY CLAYS, SILTY CLAYS, LEAN CLAYS |
| | | **OL** | ORGANIC SILTS & ORGANIC SILTY CLAYS OF LOW PLASTICITY |
| | SILTS AND CLAYS (Liquid Limit greater than 50) | **MH** | INORGANIC SILTS, MICACEOUS OR DIATOMACEOUS FINE SAND OR SILT |
| | | **CH** | INORGANIC CLAYS OF HIGH PLASTICITY, FAT CLAYS |
| | | **OH** | ORGANIC CLAYS & ORGANIC SILTS OF MEDIUM-TO-HIGH PLASTICITY |

KLEINFELDER
Bright People. Right Solutions.

| | |
|---|---|
| PROJECT NO.: | 137422 |
| DRAWN BY: | GW |
| CHECKED BY: | RH |
| DATE: | 11/8/2013 |
| REVISED: | |

BORING LOG KEY

Alpha Road Connector - Vitruvian Phase IV
Brookhaven Community College
Farmers Branch, Texas

BORING 3

gINT FILE: L:\gint\projects\dfw Project Logs\137422 Alphal Road Connector.gpj R:KLF_STANDARD_GINT_LIBRARY_SR.1.2.GLB [GEO-LEGEND 1 (GRAPHICS KEY) WITH USCS]

## GRAIN SIZE

| DESCRIPTION | | SIEVE SIZE | GRAIN SIZE | APPROXIMATE SIZE |
|---|---|---|---|---|
| Boulders | | >12 in. (304.8 mm.) | >12 in. (304.8 mm.) | Larger than basketball-sized |
| Cobbles | | 3 - 12 in. (76.2 - 304.8 mm.) | 3 - 12 in. (76.2 - 304.8 mm.) | Fist-sized to basketball-sized |
| Gravel | coarse | 3/4 -3 in. (19 - 76.2 mm.) | 3/4 -3 in. (19 - 76.2 mm.) | Thumb-sized to fist-sized |
| | fine | #4 - 3/4 in. (#4 - 19 mm.) | 0.19 - 0.75 in. (4.8 - 19 mm.) | Pea-sized to thumb-sized |
| Sand | coarse | #10 - #4 | 0.079 - 0.19 in. (2 - 4.9 mm.) | Rock salt-sized to pea-sized |
| | medium | #40 - #10 | 0.017 - 0.079 in. (0.43 - 2 mm.) | Sugar-sized to rock salt-sized |
| | fine | #200 - #10 | 0.0029 - 0.017 in. (0.07 - 0.43 mm.) | Flour-sized to sugar-sized |
| Fines | | Passing #200 | <0.0029 in. (<0.07 mm.) | Flour-sized and smaller |

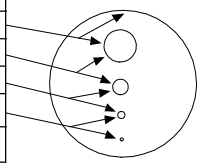

## Munsell Color

| NAME | ABBR |
|---|---|
| Red | R |
| Yellow Red | YR |
| Yellow | Y |
| Green Yellow | GY |
| Green | G |
| Blue Green | BG |
| Blue | B |
| Purple Blue | PB |
| Purple | P |
| Red Purple | RP |

## ANGULARITY

| DESCRIPTION | CRITERIA |
|---|---|
| Angular | Particles have sharp edges and relatively plane sides with unpolished surfaces |
| Subangular | Particles are similar to angular description but have rounded edges |
| Subrounded | Particles have nearly plane sides but have well-rounded corners and edges |
| Rounded | Particles have smoothly curved sides and no edges |

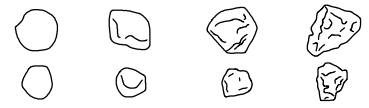


## PLASTICITY

| DESCRIPTION | LL | FIELD TEST |
|---|---|---|
| Non-plastic | NP | A 1/8-in. (3 mm.) thread cannot be rolled at any water content. |
| Low (L) | < 30 | The thread can barely be rolled and the lump or thread cannot be formed when drier than the plastic limit. |
| Medium (M) | 30 - 50 | The thread is easy to roll and not much time is required to reach the plastic limit. The thread cannot be rerolled after reaching the plastic limit. The lump or thread crumbles when drier than the plastic limit |
| High (H) | > 50 | It takes considerable time rolling and kneading to reach the plastic limit. The thread can be rerolled several times after reaching the plastic limit. The lump or thread can be formed without crumbling when drier than the plastic limit |

## MOISTURE CONTENT

| DESCRIPTION | FIELD TEST |
|---|---|
| Dry | Absence of moisture, dusty, dry to the touch |
| Moist | Damp but no visible water |
| Wet | Visible free water, usually soil is below water table |

## REACTION WITH HYDROCHLORIC ACID

| DESCRIPTION | FIELD TEST |
|---|---|
| None | No visible reaction |
| Weak | Some reaction, with bubbles forming slowly |
| Strong | Violent reaction, with bubbles forming immediately |

## APPARENT / RELATIVE DENSITY - COARSE-GRAINED SOIL

| APPARENT DENSITY | SPT-$N_{60}$ (# blows/ft) | MODIFIED CA SAMPLER (# blows/ft) | CALIFORNIA SAMPLER (# blows/ft) | RELATIVE DENSITY (%) |
|---|---|---|---|---|
| Very Loose | <4 | <4 | <5 | 0 - 15 |
| Loose | 4 - 10 | 5 - 12 | 5 - 15 | 15 - 35 |
| Medium Dense | 10 - 30 | 12- 35 | 15 - 40 | 35 - 65 |
| Dense | 30 - 50 | 35 - 60 | 40 - 70 | 65 - 85 |
| Very Dense | >50 | >60 | >70 | 85 - 100 |

NOTE: AFTER TERZAGHI AND PECK, 1948

## CONSISTENCY - FINE-GRAINED SOIL

| CONSISTENCY | UNCONFINED COMPRESSIVE STRENGTH (Qu)(psf) | CRITERIA |
|---|---|---|
| Very Soft | < 1000 | Thumb will penetrate soil more than 1 in. (25 mm.) |
| Soft | 1000 - 2000 | Thumb will penetrate soil about 1 in. (25 mm.) |
| Firm | 2000 < 4000 | Thumb will indent soil about 1/4-in. (6 mm.) |
| Hard | 4000 < 8000 | Thumb will not indent soil but readily indented with thumbnail |
| Very Hard | > 8000 | Thumbnail will not indent soil |

## STRUCTURE

| DESCRIPTION | CRITERIA |
|---|---|
| Stratified | Alternating layers of varying material or color with layers at least 1/4-in. thick, note thickness |
| Laminated | Alternating layers of varying material or color with the layer less than 1/4-in. thick, note thickness |
| Fissured | Breaks along definite planes of fracture with little resistance to fracturing |
| Slickensided | Fracture planes appear polished or glossy, sometimes striated |
| Blocky | Cohesive soil that can be broken down into small angular lumps which resist further breakdown |
| Lensed | Inclusion of small pockets of different soils, such as small lenses of sand scattered through a mass of clay; note thickness |
| Homogeneous | Same color and appearance throughout |

## CEMENTATION

| DESCRIPTION | FIELD TEST |
|---|---|
| Weakly | Crumbles or breaks with handling or slight finger pressure |
| Moderately | Crumbles or breaks with considerable finger pressure |
| Strongly | Will not crumble or break with finger pressure |

KLEINFELDER
Bright People. Right Solutions.

| | |
|---|---|
| PROJECT NO.: | 137422 |
| DRAWN BY: | GW |
| CHECKED BY: | RH |
| DATE: | 11/8/2013 |
| REVISED: | |

SOIL DESCRIPTION KEY

Alpha Road Connector - Vitruvian Phase IV
Brookhaven Community College
Farmers Branch, Texas

BORING

4

gINT FILE: L:\gint\projects\dfw Project Logs\137422 Alphal Road Connector.gpj R:KLF_STANDARD_GINT_LIBRARY_SR.1.2.GLB [GEO-LEGEND 2 (SOIL DESCRIPTION KEY)(AUS)]

**Date Begin - End:** 11/01/2013 **Drill Company:** StrataBore **BORING LOG B-01**

**Logged By:** D. Russell **Drill Crew:** Marcus

**Hor.-Vert. Datum:** Not Available **Drill Equipment:** CME-75 **Hammer Type - Drop:** 140 lb. Auto - 45 in.

**Exploration Plunge:** -90 degrees **Exploration Method:** Hollow Stem Auger

**Weather:** **Auger Diameter:** 6 in. O.D.

Latitude: 32.93125° N
Longitude: -96.84792° W
No Elevation Available

Surface Condition: Bare Earth

| Depth (feet) | Graphical Log | Sample Number | Sample Type | Blow Counts(SC)= Uncorr. blows/6 in. Pocket Pen(PP)= tsf Texas Cone(TC)= blows/6 in RQD=% | Recovery (NR=No Recovery) | USCS Symbol | Water Content (%) | Dry Density (pcf) | Passing No.4 Sieve (%) | Passing #200 Sieve (%) | Liquid Limit (NV=No Value) | Plasticity Index (NP=No Plasticity) | Other Tests/ Remarks |
|---|---|---|---|---|---|---|---|---|---|---|---|---|---|
| | | | | **Lean CLAY to Fat CLAY (CL-CH)**: dark brown to olive brown, very stiff to stiff, with calcareous nodules, fine gravel, and sand | | | | | | | | | |
| | | U-1 | | PP=4.0 | | | | | | | | | |
| | | T-2 | | TC=10/6" 5/6" | | | | | | | | | |
| | | U-3 | | PP=2.0 | | | 26.7 | 96 | | | | | |
| 5 | | | | - becoming olive brown | | | | | | | | | |
| | | T-4 | | TC=4/6" 4/6" | | | | | | | | | |
| | | U-5 | | PP=1.5 | | CL | 29.2 | | | 79 | 43 | 22 | |
| | | | | - large gravel, moist, olive brown to light brown | | | | | | | | | |
| | | U-6 | | PP=2.5 | | | 39.4 | 83 | | | | | |
| 10 | | T-7 | | TC=6/6" 9/6" | | | | | | | | | |
| | | | | - clayey gravel layer from 12 to 14 feet | | | | | | | | | |
| | | U-8 | | PP=4.0 | | | | | | | | | |
| 15 | | T-9 | | TC=7/6" 9/6" | | | | | | | | | |
| | | | | **WEATHERED SHALE**: gray to olive brown, very stiff, with iron oxide staining | | | | | | | | | |
| | | U-10 | | PP=3.5 | | | 22.9 | 101 | | | | | Unc. Comp. Str.= 1.68 tsf |
| 20 | | T-11 | | TC=12/6" 17/6" | | | | | | | | | |
| | | | | **SHALE**: dark gray, laminated | | | | | | | | | |
| | | U-12 | | PP=4.5 | | | | | | | | | |
| 25 | | T-13 | | TC=50/3" 50/3½" | | | | | | | | | |
| | | T-14 | | TC=50/3¾" 50/4" RQD=42 | | | | | | | | | |
| | | C-15 | | | 72% | | 14.6 | 120 | | | | | Unc. Comp. Str.= 6.47 tsf |
| 30 | | T-16 | | TC=50/2½" 50/2" RQD=69 | | | | | | | | | |
| | | C-17 | | | 92% | | | | | | | | |
| 35 | | T-18 | | TC=50/1½" 50/1" RQD=76 | | | | | | | | | |
| | | C-19 | | | 83% | | 17.8 | 113 | | | | | Unc. Comp. Str.= 6.75 tsf |
| 40 | | | | - with interbedded limestone layer | | | | | | | | | |

KLEINFELDER
Bright People. Right Solutions.

| | |
|---|---|
| PROJECT NO.: | 137422 |
| DRAWN BY: | GW |
| CHECKED BY: | DR |
| DATE: | 11/8/2013 |
| REVISED: | |

BORING LOG B-01

Alpha Road Connector - Vitruvian Phase IV
Brookhaven Community College
Farmers Branch, Texas

BORING

B-01



gINT FILE: L:\gint\projects\dfw Project Logs\137422 Alphal Road Connector.gpj R:KLF_STANDARD_GINT_LIBRARY_SR.1.2.GLB [KLF_BORING/TEST PIT SOIL LOG]

**BORING LOG B-01**

| | | | | | |
|---|---|---|---|---|---|
| **Date Begin - End:** | 11/01/2013 | **Drill Company:** | StrataBore | | |
| **Logged By:** | D. Russell | **Drill Crew:** | Marcus | | |
| **Hor.-Vert. Datum:** | Not Available | **Drill Equipment:** | CME-75 | **Hammer Type - Drop:** | 140 lb. Auto - 45 in. |
| **Exploration Plunge:** | -90 degrees | **Exploration Method:** | Hollow Stem Auger | | |
| **Weather:** | | **Auger Diameter:** | 6 in. O.D. | | |

Latitude: 32.93125° N
Longitude: -96.84792° W
No Elevation Available

Surface Condition: Bare Earth

| Depth (feet) | Graphical Log | Sample Number | Sample Type | Blow Counts(BC)= Uncorr. blows/6 in. Pocket Pen(PP)= tsf Texas Cone(TC)= blows/6 in RQD=% | Recovery (NR=No Recovery) | USCS Symbol | Water Content (%) | Dry Density (pcf) | Passing No.4 Sieve (%) | Passing #200 Sieve (%) | Liquid Limit (NV=No Value) | Plasticity Index (NP=No Plasticity) | Other Tests/ Remarks |
|---|---|---|---|---|---|---|---|---|---|---|---|---|---|
| | | T-20 | | TC=47/6" 50/5" | NR | | | | | | | | |
| | | C-21 | | RQD=0 | | | | | | | | | |
| | | T-22 | | TC=50/1" 50/¾" | | | | | | | | | |
| 50 | | C-23 | | RQD=90 | 90% | | | | | | | | |
| | | T-24 | | TC=50/3" 50/3½" | | | | | | | | | |
| 55 | | C-25 | | RQD=83 | 91% | | | | | | | | |
| | | T-26 | | TC=50/3" 50/3¼" | | | | | | | | | |
| 60 | | C-27 | | RQD=93 | 94% | | | | | | | | |
| | | T-28 | | TC=50/1¼" 50/½" | | | | | | | | | |
| 65 | | C-29 | | RQD=95 | 95% | | | | | | | | |
| | | T-30 | | TC=50/¼" 50/¼" | | | | | | | | | |
| 70 | | C-31 | | RQD=97 | 97% | | | | | | | | |
| | | T-32 | | TC=50/1¼" 50/1¼" | | | | | | | | | |
| 75 | | C-33 | | RQD=96 | 98% | | | | | | | | |
| | | T-34 | | TC=50/1" 50/½" | | | | | | | | | |
| 80 | | | | | | | | | | | | | |
| 85 | | | | | | | | | | | | | |

**SHALE**: dark gray, laminated
- limestone seam plugged core barrel

- with interbedded limestone layer

**LIMESTONE**: gray, with occasional shells

**SHALE**: dark gray

The exploration was terminated at approximately 80 ft. below ground surface. The exploration was backfilled with auger cuttings on November 01, 2013.

GROUNDWATER LEVEL INFORMATION:
▽ Groundwater was encountered at 13 feet below the existing ground surface. After a 24 hour observation period, the water level was at 5 feet below existing ground surface.

GENERAL NOTES:
Boring was advanced to a depth of 30 feet prior to the use of water in the rock core drilling process.

KLEINFELDER
Bright People. Right Solutions.

| | |
|---|---|
| PROJECT NO.: | 137422 |
| DRAWN BY: | GW |
| CHECKED BY: | DR |
| DATE: | 11/8/2013 |
| REVISED: | |

BORING LOG B-01

Alpha Road Connector - Vitruvian Phase IV
Brookhaven Community College
Farmers Branch, Texas

BORING
B-01



gINT FILE: L:\gint\projects\dfw Project Logs\137422 Alphal Road Connector.gpj R:KLF_STANDARD_GINT_LIBRARY_SR.1.2.GLB [KLF_BORING/TEST PIT SOIL LOG]

**Date Begin - End:** 10/29/2013 **Drill Company:** StrataBore **BORING LOG B-02**

**Logged By:** D. Russell **Drill Crew:** Pat

**Hor.-Vert. Datum:** Not Available **Drill Equipment:** CME-45 **Hammer Type - Drop:** 140 lb. Auto - 45 in.

**Exploration Plunge:** -90 degrees **Exploration Method:** Hollow Stem Auger

**Weather:** **Auger Diameter:** 6 in. O.D.

FIELD EXPLORATION | LABORATORY RESULTS

Latitude: 32.93139° N
Longitude: -96.84795° W
No Elevation Available
Location Offset: 20 ft. East of tree line

Surface Condition: Bare Earth

| Depth (feet) | Graphical Log | Sample Number | Sample Type | Blow Counts(BC)= Uncorr. blows/6 in. Pocket Pen(PP)= tsf Texas Cone(TC)= blows/6 in RQD=% | Recovery (NR=No Recovery) | USCS Symbol | Water Content (%) | Dry Density (pcf) | Passing No.4 Sieve (%) | Passing #200 Sieve (%) | Liquid Limit (NV=No Value) | Plasticity Index (NP=No Plasticity) | Other Tests/ Remarks |
|---|---|---|---|---|---|---|---|---|---|---|---|---|---|
| | | **Fat CLAY (CH)**: brown to dark brown, hard, with fine to coarse gravel | U-1 | PP=4.5+ | | | | | | | | | |
| | | | T-2 | TC=20/6" 20/6" | | | | | | | | | |
| | | | U-3 | PP=4.5+ | | | 14.9 | 116 | | | | | |
| 5 | | | T-4 | TC=17/6" 17/6" | | | | | | | | | |
| | | - becoming olive brown to yellow brown | U-5 | PP=4.5+ | | CH | 18.6 | 109 | | 95 | 66 | 39 | |
| | | - becoming gray with manganese staining and orange sand seams | U-6 | PP=4.5+ | | | 18.4 | | | | | | Unc. Comp. Str.= 5.26 tsf |
| 10 | | | T-7 | TC=15/6" 14/6" | | | | | | | | | |
| | | **WEATHERED SHALE**: dark brown to gray, very stiff to hard, some orange staining, laminated | U-8 | PP=4.0 | | | | | | | | | |
| | | | | | | | 30.9 | | | | | | |
| 15 | | | T-9 | TC=8/6" 9/6" | | | | | | | | | |
| | | | U-10 | PP=4.5+ | | | | | | | | | |
| 20 | | - with interbedded limestone seam | T-11 / C-12 | TC=50/1" 50/½" RQD=17 | 62% | | | | | | | | |
| | | **SHALE**: dark gray, with occasional shells | | | | | 21.6 | 103 | | | | | Unc. Comp. Str.= 3.38 tsf |
| 25 | | | T-13 / C-14 | TC=50/2¼" 50/2½" RQD=87 | 94% | | | | | | | | |
| 30 | | | T-15 / C-16 | TC=50/1½" 50/1½" RQD=86 | 114% | | | | | | | | |
| 35 | | | T-17 / C-18 | TC=50/2" 50/¼" RQD=19 | 82% | | 11.2 | 128 | | | | | Unc. Comp. Str.= 9.85 tsf |
| 40 | | | T-19 / C-20 | TC=50/5" 50/6" RQD=74 | 91% | | | | | | | | |
| | | - with interbedded limestone seam | | | | | | | | | | | |

KLEINFELDER
Bright People. Right Solutions.

PROJECT NO.: 137422
DRAWN BY: GW
CHECKED BY: DR
DATE: 11/8/2013
REVISED:

BORING LOG B-02

Alpha Road Connector - Vitruvian Phase IV
Brookhaven Community College
Farmers Branch, Texas

**BORING**

B-02

PAGE: 1 of 2

gINT FILE: L:\gint\projects\dfw Project Logs\137422 Alphal Road Connector.gpj R:KLF_STANDARD_GINT_LIBRARY_SR.1.2.GLB [KLF_BORING/TEST PIT SOIL LOG]

| | | | | | |
|---|---|---|---|---|---|
| **Date Begin - End:** | 10/29/2013 | **Drill Company:** | StrataBore | **BORING LOG B-02** | |
| **Logged By:** | D. Russell | **Drill Crew:** | Pat | | |
| **Hor.-Vert. Datum:** | Not Available | **Drill Equipment:** | CME-45 | **Hammer Type - Drop:** | 140 lb. Auto - 45 in. |
| **Exploration Plunge:** | -90 degrees | **Exploration Method:** | Hollow Stem Auger | | |
| **Weather:** | | **Auger Diameter:** | 6 in. O.D. | | |

FIELD EXPLORATION

Latitude: 32.93139° N
Longitude: -96.84795° W
No Elevation Available
Location Offset: 20 ft. East of tree line

Surface Condition: Bare Earth

| Depth (feet) | Graphical Log | Sample Number | Sample Type | Blow Counts(BC)= Uncorr. blows/6 in. Pocket Pen(PP)= tsf Texas Cone(TC)= blows/6 in RQD=% | Recovery (NR=No Recovery) |
|---|---|---|---|---|---|
| | | T-21 | | TC=50/¼" 50/¼" RQD=72 | 72% |
| | | C-22 | | | |
| | | T-23 | | TC=50/3½" 50/3¼" RQD=71 | |
| 50 | | C-24 | | | 71% |
| | | T-25 | | TC=50/2¾" 50/3¼" RQD=40 | |
| 55 | | C-26 | | | 40% |
| | | T-27 | | TC=50/1¾" 50/1¼" RQD=93 | |
| 60 | | C-28 | | | 93% |
| | | T-29 | | TC=50/¾" 50/½" RQD=94 | |
| 65 | | C-30 | | | 94% |
| | | T-31 | | TC=50/1½" 50/¾" RQD=96 | |
| 70 | | C-32 | | | 95% |
| | | T-33 | | TC=50/1¼" 50/1" RQD=98 | |
| 75 | | C-34 | | | 98% |
| | | T-35 | | TC=50/1" 50/1" | |
| 80 | | | | | |
| 85 | | | | | |

**SHALE**: dark gray, with occasional shells

**LIMESTONE**: gray, with occasional shells, with interbedded shale layers

**SHALE**: dark gray, hard, sandy, with shells

LABORATORY RESULTS

| USCS Symbol | Water Content (%) | Dry Density (pcf) | Passing No.4 Sieve (%) | Passing #200 Sieve (%) | Liquid Limit (NV=No Value) | Plasticity Index (NP=No Plasticity) | Other Tests/ Remarks |
|---|---|---|---|---|---|---|---|
| | | | | | | | |

The exploration was terminated at approximately 80 ft. below ground surface. The exploration was backfilled with auger cuttings on October 29, 2013.

GROUNDWATER LEVEL INFORMATION:
▼ **Groundwater was not encountered during drilling operations or upon completion.** After a 24 hour observation period, the water level was at 5 feet below existing ground surface.

GENERAL NOTES:
Boring was advanced to a depth of 20 feet prior to the use of water in the rock core drilling process.

KLEINFELDER
Bright People. Right Solutions.

| | |
|---|---|
| PROJECT NO.: | 137422 |
| DRAWN BY: | GW |
| CHECKED BY: | DR |
| DATE: | 11/8/2013 |
| REVISED: | |

BORING LOG B-02

Alpha Road Connector - Vitruvian Phase IV
Brookhaven Community College
Farmers Branch, Texas

BORING
B-01



gINT FILE: L:\gint\projects\dfw Project Logs\137422 Alphal Road Connector.gpj R:KLF_STANDARD_GINT_LIBRARY_SR.1.2.GLB [KLF_BORING/TEST PIT SOIL LOG]

**BORING LOG B-03**

| | | | | | |
|---|---|---|---|---|---|
| **Date Begin - End:** | 11/05/2013 | **Drill Company:** | StrataBore | | |
| **Logged By:** | D. Russell | **Drill Crew:** | Marcus | | |
| **Hor.-Vert. Datum:** | Not Available | **Drill Equipment:** | CME-75 | **Hammer Type - Drop:** | 140 lb. Auto - 45 in. |
| **Exploration Plunge:** | -90 degrees | **Exploration Method:** | Hollow Stem Auger | | |
| **Weather:** | | **Auger Diameter:** | 6 in. O.D. | | |

Latitude: 32.93185° N
Longitude: -96.84804° W
No Elevation Available
Location Offset: 40 ft. Northwest of Stake

Surface Condition: Bare Earth

| Depth (feet) | Graphical Log | | Sample Number | Sample Type | Blow Counts(BC)= Uncorr. blows/6 in. Pocket Pen(PP)= tsf Texas Cone(TC)= blows/6 in RQD=% | Recovery (NR=No Recovery) | USCS Symbol | Water Content (%) | Dry Density (pcf) | Passing No.4 Sieve (%) | Passing #200 Sieve (%) | Liquid Limit (NV=No Value) | Plasticity Index (NP=No Plasticity) | Other Tests/ Remarks |
|---|---|---|---|---|---|---|---|---|---|---|---|---|---|---|
| | | **Fat CLAY (CH)**: brown to dark brown, hard, with calcareous nodules, coarse to fine gravel, and sand | U-1 | | PP=4.5+ | | | | | | | | | |
| | | | T-2 | | TC=14/6" 14/6" | | | | | | | | | |
| | | | U-3 | | PP=4.5+ | | CH | 18.9 | 107 | | 81 | 58 | 32 | |
| 5 | | | T-4 | | TC=12/6" 12/6" | | | | | | | | | |
| | | | U-5 | | PP=4.5+ | | | 21.2<br>22.0 | 102 | | | | | Unc. Comp. Str.= 7.06 tsf |
| | | - becoming brownish gray, slickensided, iron oxide staining | U-6 | | PP=4.5 | | | 25.0 | 98 | | | | | |
| 10 | | | T-7 | | TC=2/6" 4/6" | | | | | | | | | |
| | | - with coarse gravel seam | U-8 | | PP=3.0 | | | 24.5 | | | | | | |
| 15 | | | T-9 | | TC=13/6" 12/6" | | | | | | | | | |
| | | **WEATHERED SHALE**: dark gray, laminated | U-10 | | PP=4.5+ | | | | | | | | | |
| 20 | | | T-11 | | TC=50/5" 50/5½" | | | | | | | | | |
| | | | T-12 | | TC=50/4" 50/3½" | | | | | | | | | |
| 25 | | **SHALE**: gray to dark gray, stiff to hard, sandy | C-13 | | RQD=98 | 98% | | 14.2 | 121 | | | | | Unc. Comp. Str.= 13.53 tsf |
| | | | T-14 | | TC=50/6" 50/2" | | | | | | | | | |
| 30 | | | C-15 | | RQD=100 | 100% | | | | | | | | |
| | | | T-16 | | TC=50/1½" 50/1¼" | | | | | | | | | |
| 35 | | - limestone seam plugged core barrel | C-17 | | RQD=39 | 48% | | 18.5 | 113 | | | | | Unc. Comp. Str.= 6.13 tsf |
| | | | T-18 | | TC=50/3¼" 50/4" | | | | | | | | | |
| 40 | | | C-19 | | RQD=0 | 50% | | | | | | | | |

KLEINFELDER
Bright People. Right Solutions.

| | |
|---|---|
| PROJECT NO.: | 137422 |
| DRAWN BY: | GW |
| CHECKED BY: | DR |
| DATE: | 11/8/2013 |
| REVISED: | |

BORING LOG B-03

Alpha Road Connector - Vitruvian Phase IV
Brookhaven Community College
Farmers Branch, Texas

BORING

B-03



gINT FILE: L:\gint\projects\dfw Project Logs\137422 Alphal Road Connector.gpj R:KLF_STANDARD_GINT_LIBRARY_SR.1.2.GLB [KLF_BORING/TEST PIT SOIL LOG]

| | | | | | |
|---|---|---|---|---|---|
| **Date Begin - End:** | 11/05/2013 | **Drill Company:** | StrataBore | **BORING LOG B-03** | |
| **Logged By:** | D. Russell | **Drill Crew:** | Marcus | | |
| **Hor.-Vert. Datum:** | Not Available | **Drill Equipment:** | CME-75 | **Hammer Type - Drop:** | 140 lb. Auto - 45 in. |
| **Exploration Plunge:** | -90 degrees | **Exploration Method:** | Hollow Stem Auger | | |
| **Weather:** | | **Auger Diameter:** | 6 in. O.D. | | |

FIELD EXPLORATION | LABORATORY RESULTS

Latitude: 32.93185° N
Longitude: -96.84804° W
No Elevation Available
Location Offset: 40 ft. Northwest of Stake

Surface Condition: Bare Earth

| Depth (feet) | Graphical Log | Sample Number | Sample Type | Blow Counts(SC)= Uncorr. blows/6 in. Pocket Pen(PP)= tsf Texas Cone(TC)= blows/6 in RQD=% | Recovery (NR=No Recovery) | USCS Symbol | Water Content (%) | Dry Density (pcf) | Passing No.4 Sieve (%) | Passing #200 Sieve (%) | Liquid Limit (NV=No Value) | Plasticity Index (NP=No Plasticity) | Other Tests/ Remarks |
|---|---|---|---|---|---|---|---|---|---|---|---|---|---|
| | | T-20 | | TC=50/1½" 50/1" RQD=87 | 87% | | | | | | | | |
| | | C-21 | | | | | | | | | | | |
| 50 | | T-22 | | TC=50/1¼" 50/1½" RQD=88 | 88% | | | | | | | | |
| | | C-23 | | | | | | | | | | | |
| 55 | | T-24 | | TC=50/1¼" 50/1" RQD=100 | 100% | | | | | | | | |
| | | C-25 | | | | | | | | | | | |
| 60 | | T-26 | | TC=50/1¾" 50/1" | | | | | | | | | |
| 65 | | | | | | | | | | | | | |
| 70 | | | | | | | | | | | | | |
| 75 | | | | | | | | | | | | | |
| 80 | | | | | | | | | | | | | |
| 85 | | | | | | | | | | | | | |

**SHALE**: gray to dark gray, stiff to hard, sandy
- with interbedded limestone layer

The exploration was terminated at approximately 60 ft. below ground surface. The exploration was backfilled with auger cuttings on November 05, 2013.

GROUNDWATER LEVEL INFORMATION:
Groundwater was not encountered during drilling or after completion.

GENERAL NOTES:
Boring was advanced to a depth of 25 feet prior to the use of water in the rock core drilling process.

KLEINFELDER
Bright People. Right Solutions.

| | |
|---|---|
| PROJECT NO.: | 137422 |
| DRAWN BY: | GW |
| CHECKED BY: | DR |
| DATE: | 11/8/2013 |
| REVISED: | |

BORING LOG B-03

Alpha Road Connector - Vitruvian Phase IV
Brookhaven Community College
Farmers Branch, Texas

BORING
B-03
PAGE: 2 of 2

gINT FILE: L:\gint\projects\dfw Project Logs\137422 Alphal Road Connector.gpj R:KLF_STANDARD_GINT_LIBRARY_SR.1.2.GLB [KLF_BORING/TEST PIT SOIL LOG]

| | | | | | |
|---|---|---|---|---|---|
| **Date Begin - End:** | 11/04/2013 | **Drill Company:** | StrataBore | **BORING LOG B-04** | |
| **Logged By:** | D. Russell | **Drill Crew:** | Marcus | | |
| **Hor.-Vert. Datum:** | Not Available | **Drill Equipment:** | CME-75 | **Hammer Type - Drop:** | 140 lb. Auto - 45 in. |
| **Exploration Plunge:** | -90 degrees | **Exploration Method:** | Hollow Stem Auger | | |
| **Weather:** | | **Auger Diameter:** | 6 in. O.D. | | |

FIELD EXPLORATION | LABORATORY RESULTS

Latitude: 32.93200° N
Longitude: -96.84802° W
No Elevation Available

Surface Condition: Bare Earth

| Depth (feet) | Graphical Log | Sample Number | Sample Type | Blow Counts(SC)= Uncorr. blows/6 in. Pocket Pen(PP)= tsf Texas Cone(TC)= blows/6 in RQD=% | Recovery (NR=No Recovery) | USCS Symbol | Water Content (%) | Dry Density (pcf) | Passing No.4 Sieve (%) | Passing #200 Sieve (%) | Liquid Limit (NV=No Value) | Plasticity Index (NP=No Plasticity) | Other Tests/ Remarks |
|---|---|---|---|---|---|---|---|---|---|---|---|---|---|
| | | **Fat CLAY (CH)**: dark brown to olive brown, hard, with calcareous nodules and coarse to fine gravel | U-1 | PP=4.5+ | | | | | | | | | |
| | | | T-2 | TC=11/6" 9/6" | | | | | | | | | |
| | | - becoming olive brown | U-3 | PP=4.5+ | | CH | 16.8 | | | 90 | 65 | 40 | |
| 5 | | | T-4 | TC=7/6" 14/6" | | | | | | | | | |
| | | | U-5 | PP=4.5+ | | | 19.1 | 107 | | | | | |
| | | - iron oxide staining | U-6 | PP=4.5+ | | | 18.8 | | | | | | Unc. Comp. Str.= 8.79 tsf |
| 10 | | | T-7 | TC=14/6" 20/6" | | | | | | | | | |
| | | **WEATHERED SHALE**: dark gray, laminated, with iron oxide staining, slickensided | U-8 | PP=4.5+ | | | 20.7 | 107 | | | | | Unc. Comp. Str.= 5.15 tsf |
| 15 | | | T-9 | TC=47/6" 50/6" | | | | | | | | | |
| | | **SHALE**: dark gray, stiff to hard, with interbedded limestone seams and occasional shells | T-10 | TC=50/5" 50/3" | | | | | | | | | |
| 20 | | | C-11 | RQD=81 | 81% | | | | | | | | |
| | | | T-12 | TC=50/1½" 50/1¼" | | | | | | | | | |
| 25 | | | C-13 | RQD=96 | 96% | | | | | | | | |
| | | | T-14 | TC=50/1" 50/1½" | | | | | | | | | |
| 30 | | | C-15 | RQD=93 | 93% | | | | | | | | |
| | | | T-16 | TC=50/1" 50/1" | | | | | | | | | |
| 35 | | | C-17 | RQD=62 | 92% | | 17.8 | 112 | | | | | Unc. Comp. Str.= 5.55 tsf |
| | | | T-18 | TC=50/4" 50/3" | | | | | | | | | |
| 40 | | | C-19 | RQD=94 | 94% | | | | | | | | |

KLEINFELDER
Bright People. Right Solutions.

| | |
|---|---|
| PROJECT NO.: | 137422 |
| DRAWN BY: | GW |
| CHECKED BY: | DR |
| DATE: | 11/8/2013 |
| REVISED: | |

BORING LOG B-04

Alpha Road Connector - Vitruvian Phase IV
Brookhaven Community College
Farmers Branch, Texas

BORING

B-04

PAGE: 1 of 2

gINT FILE: L:\gint\projects\dfw Project Logs\137422 Alphal Road Connector.gpj R:KLF_STANDARD_GINT_LIBRARY_SR.1.2.GLB [KLF_BORING/TEST PIT SOIL LOG]

| | | | | | |
|---|---|---|---|---|---|
| **Date Begin - End:** | 11/04/2013 | **Drill Company:** | StrataBore | **BORING LOG B-04** | |
| **Logged By:** | D. Russell | **Drill Crew:** | Marcus | | |
| **Hor.-Vert. Datum:** | Not Available | **Drill Equipment:** | CME-75 | **Hammer Type - Drop:** | 140 lb. Auto - 45 in. |
| **Exploration Plunge:** | -90 degrees | **Exploration Method:** | Hollow Stem Auger | | |
| **Weather:** | | **Auger Diameter:** | 6 in. O.D. | | |

FIELD EXPLORATION

Latitude: 32.93200° N
Longitude: -96.84802° W
No Elevation Available

Surface Condition: Bare Earth

| Depth (feet) | Graphical Log | Sample Number | Sample Type | Blow Counts(BC)= Uncorr. blows/6 in. Pocket Pen(PP)= tsf Texas Cone(TC)= blows/6 in RQD=% | Recovery (NR=No Recovery) |
|---|---|---|---|---|---|
| | | T-20 | | TC=50/1¼" | 91% |
| | | C-21 | | 50/½" RQD=91 | |
| 50 | | T-22 | | TC=50/2" | 98% |
| | | C-23 | | 50/1" RQD=98 | |
| 55 | | T-24 | | TC=50/1¼" | 82% |
| | | C-25 | | 50/1½" RQD=82 | |
| 60 | | T-26 | | TC=50/2¼" | 95% |
| | | C-27 | | 50/1½" RQD=95 | |
| 65 | | T-28 | | TC=50/¾" | 9362% |
| | | C-29 | | 50/½" RQD=94 | |
| 70 | | T-30 | | TC=50/1¼" | 89% |
| | | C-31 | | 50/1" RQD=89 | |
| 75 | | T-32 | | TC=50/1¼" | 80% |
| | | C-33 | | 50/¾" RQD=80 | |
| 80 | | T-34 | | TC=50/1" 50/¾" | |
| 85 | | | | | |

**SHALE**: dark gray, stiff to hard, with interbedded limestone seams and occasional shells

**LIMESTONE**: gray, hard, pitted

**SHALE**: dark gray, with occasional shells

The exploration was terminated at approximately 80 ft. below ground surface. The exploration was backfilled with auger cuttings on November 04, 2013.

LABORATORY RESULTS

| USCS Symbol | Water Content (%) | Dry Density (pcf) | Passing No.4 Sieve (%) | Passing #200 Sieve (%) | Liquid Limit (NV=No Value) | Plasticity Index (NP=No Plasticity) | Other Tests/ Remarks |
|---|---|---|---|---|---|---|---|
| | | | | | | | |

GROUNDWATER LEVEL INFORMATION:
▼ **Groundwater was not encountered during drilling operations or upon completion.** After a 24 hour observation period, the boring was dry.

GENERAL NOTES:
Boring was advanced to a depth of 25 feet prior to the use of water in the rock core drilling process.

KLEINFELDER
Bright People. Right Solutions.

| | |
|---|---|
| PROJECT NO.: | 137422 |
| DRAWN BY: | GW |
| CHECKED BY: | DR |
| DATE: | 11/8/2013 |
| REVISED: | |

BORING LOG B-04

Alpha Road Connector - Vitruvian Phase IV
Brookhaven Community College
Farmers Branch, Texas

BORING

B-04

PAGE: 2 of 2

gINT FILE: L:\gint\projects\dfw Project Logs\137422 Alphal Road Connector.gpj R:KLF_STANDARD_GINT_LIBRARY_SR.1.2.GLB [KLF_BORING/TEST PIT SOIL LOG]

**Date Begin - End:** 10/29/2013 **Drill Company:** StrataBore **BORING LOG C-01**

**Logged By:** D. Russell **Drill Crew:** Marcus

**Hor.-Vert. Datum:** Not Available **Drill Equipment:** CME-45 **Hammer Type - Drop:** 140 lb. Auto - 30 in.

**Exploration Plunge:** -90 degrees **Exploration Method:** Hollow Stem Auger

**Weather:** **Auger Diameter:** 6 in. O.D.

Latitude: 32.93141° N
Longitude: -96.84794° W
No Elevation Available

Surface Condition: Bare Earth

| Depth (feet) | Graphical Log | Sample Number | Sample Type | Blow Counts(BC)= Uncorr. blows/6 in. Pocket Pen(PP)= tsf Texas Cone(TC)= blows/6 in RQD=% | Recovery (NR=No Recovery) | USCS Symbol | Water Content (%) | Dry Density (pcf) | Passing No.4 Sieve (%) | Passing #200 Sieve (%) | Liquid Limit (NV=No Value) | Plasticity Index (NP=No Plasticity) | Other Tests/ Remarks |
|---|---|---|---|---|---|---|---|---|---|---|---|---|---|
| | | | | FIELD EXPLORATION | | LABORATORY RESULTS | | | | | | | |
| 0 | | **Fat CLAY to Lean CLAY (CL-CH)**: dark brown to olive brown, very stiff to soft, with calcareous nodules and gravel | U-1 | PP=3.5 | | | | | | | | | |
| | | | U-2 | PP=3.0 | | | | | | | | | |
| | | | U-3 | PP=2.5 | | | | | | | | | |
| ▽ 5 | | - friable, olive brown to yellow brown | U-4 | PP=0.5 | | | | | | | | | |
| | | - pale brown, with coarse to fine gravel and sand seams | U-5 | PP=1.5 | | SC | 24.2 | 107 | | 36 | 43 | 21 | Unc. Comp. Str.= 0.84 tsf |
| 10 | | | | | | | | | | | | | |
| | | **Lean CLAY with gravel (CL)**: light brown, gray, hard, high amount of gravel | U-6 | PP= -- | | | | | | | | | |
| 15 | | | S-7 | BC=12 27 28 | | | | | | | | | |
| | | **WEATHERED SHALE**: dark gray to light gray, with iron oxide staining, laminated | U-8 | PP=4.5 | | | | | | | | | |
| 20 | | | | | | | | | | | | | |
| | | | U-9 | PP=4.5+ | | | | | | | | | |
| 25 | | | | | | | | | | | | | |

The exploration was terminated at approximately 25 ft. below ground surface. The exploration was backfilled with auger cuttings on October 29, 2013.

GROUNDWATER LEVEL INFORMATION:
▽ Groundwater was encountered at 5 feet below the existing ground surface. After a 24 hour observation period, the water level was at 6 feet below existing ground surface.
GENERAL NOTES:
Boring drilled at stake

KLEINFELDER
Bright People. Right Solutions.

| | |
|---|---|
| PROJECT NO.: | 137422 |
| DRAWN BY: | GW |
| CHECKED BY: | DR |
| DATE: | 11/8/2013 |
| REVISED: | |

BORING LOG C-01

Alpha Road Connector - Vitruvian Phase IV
Brookhaven Community College
Farmers Branch, Texas

BORING
C-01
PAGE: 1 of 1

gINT FILE: L:\gint\projects\dfw Project Logs\137422 Alphal Road Connector.gpj R:KLF_STANDARD_GINT_LIBRARY_SR.1.2.GLB [KLF_BORING/TEST PIT SOIL LOG]

| | | | | | |
|---|---|---|---|---|---|
| **Date Begin - End:** | 10/29/2013 | **Drill Company:** | StrataBore | **BORING LOG C-02** | |
| **Logged By:** | D. Russell | **Drill Crew:** | Marcus | | |
| **Hor.-Vert. Datum:** | Not Available | **Drill Equipment:** | CME-45 | **Hammer Type - Drop:** | 140 lb. Auto - 30 in. |
| **Exploration Plunge:** | -90 degrees | **Exploration Method:** | Hollow Stem Auger | | |
| **Weather:** | | **Auger Diameter:** | 6 in. O.D. | | |

FIELD EXPLORATION

Latitude: 32.93256° N
Longitude: -96.85580° W
No Elevation Available

Surface Condition: Bare Earth

| Depth (feet) | Graphical Log | Sample Number | Sample Type | Blow Counts(BC)= Uncorr. blows/6 in. Pocket Pen(PP)= tsf Texas Cone(TC)= blows/6 in RQD=% | Recovery (NR=No Recovery) | USCS Symbol | Water Content (%) | Dry Density (pcf) | Passing No.4 Sieve (%) | Passing #200 Sieve (%) | Liquid Limit (NV=No Value) | Plasticity Index (NP=No Plasticity) | Other Tests/ Remarks |
|---|---|---|---|---|---|---|---|---|---|---|---|---|---|
| | | **Fat CLAY (CH)**: dark brown, hard, with occasional calcareous nodules | U-1 | PP=4.5+ | | | | | | | | | |
| | | | U-2 | PP=4.5+ | | | 34.1 | | | | | | |
| | | **Lean CLAY (CL)**: light grayish brown to light brown, hard, with gravel and sand seams | S-3 | BC=14<br>14<br>25 | | SC | 12.6 | | | 38 | 41 | 21 | |
| 5 | | | | | | | | | | | | | |
| | | **WEATHERED LIMESTONE**: light brown to brown, with clay seams | S-4 | BC=50/4" | | | | | | | | | |
| | | | T-5 | TC=50/2"<br>50/2" | | | | | | | | | |
| 10 | | | | | | | | | | | | | |
| | | **LIMESTONE**: gray | | | | | | | | | | | |
| | | | T-6 | TC=50/½"<br>50/½" | | | | | | | | | |
| 15 | | | | | | | | | | | | | |
| | | | T-7 | TC=50/¾"<br>50/½" | | | | | | | | | |
| 20 | | | | | | | | | | | | | |
| | | | T-8 | TC=50/½"<br>50/¼" | | | | | | | | | |
| 25 | | | | | | | | | | | | | |

The exploration was terminated at approximately 25 ft. below ground surface. The exploration was backfilled with auger cuttings on October 29, 2013.

GROUNDWATER LEVEL INFORMATION:
Groundwater was not encountered during drilling or after completion.
GENERAL NOTES:
Boring drilled at stake

KLEINFELDER
Bright People. Right Solutions.

| | |
|---|---|
| PROJECT NO.: | 137422 |
| DRAWN BY: | GW |
| CHECKED BY: | DR |
| DATE: | 11/8/2013 |
| REVISED: | |

BORING LOG C-02

Alpha Road Connector - Vitruvian Phase IV
Brookhaven Community College
Farmers Branch, Texas

BORING

C-02

PAGE: 1 of 1

gINT FILE: L:\gint\projects\dfw Project Logs\137422 Alphal Road Connector.gpj R:KLF_STANDARD_GINT_LIBRARY_SR.1.2.GLB [KLF_BORING/TEST PIT SOIL LOG]

| | | | | | |
|---|---|---|---|---|---|
| **Date Begin - End:** | 10/29/2013 | **Drill Company:** | StrataBore | **BORING LOG P-01** | |
| **Logged By:** | D. Russell | **Drill Crew:** | Marcus | | |
| **Hor.-Vert. Datum:** | Not Available | **Drill Equipment:** | CME-45 | **Hammer Type - Drop:** | 140 lb. Auto - 30 in. |
| **Exploration Plunge:** | -90 degrees | **Exploration Method:** | Hollow Stem Auger | | |
| **Weather:** | | **Auger Diameter:** | 6 in. O.D. | | |

Latitude: 32.93256° N
Longitude: -96.84558° W
No Elevation Available

Surface Condition: Bare Earth

| Depth (feet) | Graphical Log | Sample Number | Sample Type | Blow Counts(BC)= Uncorr. blows/6 in. Pocket Pen(PP)= tsf Texas Cone(TC)= blows/6 in RQD=% | Recovery (NR=No Recovery) | USCS Symbol | Water Content (%) | Dry Density (pcf) | Passing No.4 Sieve (%) | Passing #200 Sieve (%) | Liquid Limit (NV=No Value) | Plasticity Index (NP=No Plasticity) | Other Tests/ Remarks |
|---|---|---|---|---|---|---|---|---|---|---|---|---|---|
| | | **Fat CLAY (CH)**: dark brown, hard, with limestone fragments | U-1 | PP=4.5+ | | | | | | | | | |
| | | | U-2 | PP=4.5+ | | CH | 11.5 | | | 95 | 71 | 44 | |
| 5 | | **WEATHERED LIMESTONE**: light brownish gray to light brown, with clay | S-3 | BC=35 50/4" | | | | | | | | | |
| | | | T-4 | TC=50/1" 50/¾" | | | | | | | | | |
| | | - becoming brownish gray | T-5 | TC=**50** | | | | | | | | | |
| 10 | | | | | | | | | | | | | |
| 15 | | | | | | | | | | | | | |
| 20 | | | | | | | | | | | | | |
| 25 | | | | | | | | | | | | | |

The exploration was terminated at approximately 10 ft. below ground surface. The exploration was backfilled with auger cuttings on October 29, 2013.

GROUNDWATER LEVEL INFORMATION:
Groundwater was not encountered during drilling or after completion.
GENERAL NOTES:
Boring drilled at stake

KLEINFELDER
Bright People. Right Solutions.

| | |
|---|---|
| PROJECT NO.: | 137422 |
| DRAWN BY: | GW |
| CHECKED BY: | DR |
| DATE: | 11/8/2013 |
| REVISED: | |

BORING LOG P-01

Alpha Road Connector - Vitruvian Phase IV
Brookhaven Community College
Farmers Branch, Texas

BORING

P-01

PAGE: 1 of 1

gINT FILE: L:\gint\projects\dfw Project Logs\137422 Alphal Road Connector.gpj R:KLF_STANDARD_GINT_LIBRARY_SR.1.2.GLB [KLF_BORING/TEST PIT SOIL LOG]

**Date Begin - End:** 10/29/2013 **Drill Company:** StrataBore **BORING LOG P-02**

**Logged By:** D. Russell **Drill Crew:** Marcus

**Hor.-Vert. Datum:** Not Available **Drill Equipment:** CME-45 **Hammer Type - Drop:** 140 lb. Auto - 30 in.

**Exploration Plunge:** -90 degrees **Exploration Method:** Hollow Stem Auger

**Weather:** **Auger Diameter:** 6 in. O.D.

| Depth (feet) | Graphical Log | FIELD EXPLORATION<br>Latitude: 32.93244° N<br>Longitude: -96.84703° W<br>No Elevation Available<br>Surface Condition: Bare Earth | Sample Number | Sample Type | Blow Counts(SC)= Uncorr. blows/6 in. Pocket Pen(PP)= tsf Texas Cone(TC)= blows/6 in RQD=% | Recovery (NR=No Recovery) | LABORATORY RESULTS<br>USCS Symbol | Water Content (%) | Dry Density (pcf) | Passing No.4 Sieve (%) | Passing #200 Sieve (%) | Liquid Limit (NV=No Value) | Plasticity Index (NP=No Plasticity) | Other Tests/ Remarks |
|---|---|---|---|---|---|---|---|---|---|---|---|---|---|---|
| | | **Fat CLAY (CH)**: dark brown to dark grayish brown, hard to very stiff, with fine gravel and sand seams | U-1 | | PP=4.0 | | | 30.5 | | | | | | |
| | | | U-2 | | PP=4.5+ | | CH | 14.0 | | | 67 | 57 | 34 | |
| 5 | | | U-3 | | PP=4.5+ | | | 17.2 | | | | | | |
| | | | U-4 | | PP=3.5 | | | 23.5 | | | | | | |
| | | - becoming olive brown | U-5 | | PP=2.0 | | | | | | | | | |
| 10 | | | | | | | | | | | | | | |
| 15 | | | | | | | | | | | | | | |
| 20 | | | | | | | | | | | | | | |
| 25 | | | | | | | | | | | | | | |

The exploration was terminated at approximately 10 ft. below ground surface. The exploration was backfilled with auger cuttings on October 29, 2013.

GROUNDWATER LEVEL INFORMATION:
Groundwater was not encountered during drilling or after completion.

GENERAL NOTES:
Boring drilled at stake

KLEINFELDER
Bright People. Right Solutions.

| | |
|---|---|
| PROJECT NO.: | 137422 |
| DRAWN BY: | GW |
| CHECKED BY: | DR |
| DATE: | 11/8/2013 |
| REVISED: | |

BORING LOG P-02

Alpha Road Connector - Vitruvian Phase IV
Brookhaven Community College
Farmers Branch, Texas

BORING
P-02
PAGE: 1 of 1

gINT FILE: L:\gint\projects\dfw Project Logs\137422 Alphal Road Connector.gpj R:KLF_STANDARD_GINT_LIBRARY_SR.1.2.GLB [KLF_BORING/TEST PIT SOIL LOG]

**Date Begin - End:** 10/29/2013 **Drill Company:** StrataBore **BORING LOG P-03**

**Logged By:** D. Russell **Drill Crew:** Marcus

**Hor.-Vert. Datum:** Not Available **Drill Equipment:** CME-45 **Hammer Type - Drop:** 140 lb. Auto - 30 in.

**Exploration Plunge:** -90 degrees **Exploration Method:** Hollow Stem Auger

**Weather:** **Auger Diameter:** 6 in. O.D.

| Depth (feet) | Graphical Log | FIELD EXPLORATION | Sample Number | Sample Type | Blow Counts(BC)= Uncorr. blows/6 in. Pocket Pen(PP)= tsf Texas Cone(TC)= blows/6 in RQD=% | Recovery (NR=No Recovery) | LABORATORY RESULTS: USCS Symbol | Water Content (%) | Dry Density (pcf) | Passing No.4 Sieve (%) | Passing #200 Sieve (%) | Liquid Limit (NV=No Value) | Plasticity Index (NP=No Plasticity) | Other Tests/ Remarks |
|---|---|---|---|---|---|---|---|---|---|---|---|---|---|---|
| | | Latitude: 32.93258° N<br>Longitude: -96.84789° W<br>No Elevation Available<br><br>Surface Condition: Bare Earth | | | | | | | | | | | | |
| | | **Fat CLAY (CH)**: dark brown to dark brownish gray, hard, with fine gravel | U-1 | | PP=2.5 | | CH | 31.5 | | | 91 | 63 | 34 | |
| | | | U-2 | | PP=4.5+ | | | 22.2 | | | | | | |
| 5 | | | U-3 | | PP=4.5+ | | | 24.8 | | | | | | |
| | | | U-4 | | PP=4.5+ | | | 23.1 | | | | | | |
| | | - becoming olive brown, some gray | U-5 | | PP=4.5+ | | | | | | | | | |
| 10 | | | | | | | | | | | | | | |
| 15 | | | | | | | | | | | | | | |
| 20 | | | | | | | | | | | | | | |
| 25 | | | | | | | | | | | | | | |

The exploration was terminated at approximately 10 ft. below ground surface. The exploration was backfilled with auger cuttings on October 29, 2013.

GROUNDWATER LEVEL INFORMATION:
Groundwater was not encountered during drilling or after completion.

GENERAL NOTES:
Boring drilled at stake

KLEINFELDER
Bright People. Right Solutions.

| | |
|---|---|
| PROJECT NO.: | 137422 |
| DRAWN BY: | GW |
| CHECKED BY: | DR |
| DATE: | 11/8/2013 |
| REVISED: | |

BORING LOG P-03

Alpha Road Connector - Vitruvian Phase IV
Brookhaven Community College
Farmers Branch, Texas

BORING

P-03

PAGE: 1 of 1

gINT FILE: L:\gint\projects\dfw Project Logs\137422 Alphal Road Connector.gpj R:KLF_STANDARD_GINT_LIBRARY_SR.1.2.GLB [KLF_BORING/TEST PIT SOIL LOG]

**Date Begin - End:** 10/29/2013 **Drill Company:** StrataBore **BORING LOG P-04**

**Logged By:** D. Russell **Drill Crew:** Marcus

**Hor.-Vert. Datum:** Not Available **Drill Equipment:** CME-45 **Hammer Type - Drop:** 140 lb. Auto - 30 in.

**Exploration Plunge:** -90 degrees **Exploration Method:** Hollow Stem Auger

**Weather:** **Auger Diameter:** 6 in. O.D.

| Depth (feet) | Graphical Log | FIELD EXPLORATION | Sample Number | Sample Type | Blow Counts(SC)= Uncorr. blows/6 in. Pocket Pen(PP)= tsf Texas Cone(TC)= blows/6 in RQD=% | Recovery (NR=No Recovery) | LABORATORY RESULTS: USCS Symbol | Water Content (%) | Dry Density (pcf) | Passing No.4 Sieve (%) | Passing #200 Sieve (%) | Liquid Limit (NV=No Value) | Plasticity Index (NP=No Plasticity) | Other Tests/ Remarks |
|---|---|---|---|---|---|---|---|---|---|---|---|---|---|---|
| | | Latitude: 32.93350° N<br>Longitude: -96.84782° W<br>No Elevation Available<br>Location Offset: 10 ft. South<br><br>Surface Condition: Bare Earth | | | | | | | | | | | | |
| | | **CLAY (CL)**: dark brown to orange, with limestone fragments, calcareous, possible fill, with sand seams | U-1 | | PP=4.5+ | | | 17.7 | | | | | | |
| | | | U-2 | | PP=4.5+ | | CL | 16.7 | | | 51 | 38 | 17 | |
| | | **Fat CLAY (CH)**: dark brown to dark brownish gray, hard, with fine gravel | U-3 | | PP=4.0 | | | | | | | | | |
| 5 | | | U-4 | | PP=4.0 | | | 23.0 | | | | | | |
| | | | U-5 | | PP=4.0 | | | 25.6 | | | | | | |
| 10 | | | | | | | | | | | | | | |
| 15 | | | | | | | | | | | | | | |
| 20 | | | | | | | | | | | | | | |
| 25 | | | | | | | | | | | | | | |

The exploration was terminated at approximately 10 ft. below ground surface. The exploration was backfilled with auger cuttings on October 29, 2013.

GROUNDWATER LEVEL INFORMATION:
Groundwater was not encountered during drilling or after completion.

GENERAL NOTES:
Boring drilled at stake

KLEINFELDER
Bright People. Right Solutions.

| | |
|---|---|
| PROJECT NO.: | 137422 |
| DRAWN BY: | GW |
| CHECKED BY: | DR |
| DATE: | 11/8/2013 |
| REVISED: | |

BORING LOG P-04

Alpha Road Connector - Vitruvian Phase IV
Brookhaven Community College
Farmers Branch, Texas

BORING

P-04

PAGE: 1 of 1

gINT FILE: L:\gint\projects\dfw Project Logs\137422 Alphal Road Connector.gpj R:KLF_STANDARD_GINT_LIBRARY_SR.1.2.GLB [KLF_BORING/TEST PIT SOIL LOG]

| | | | | | |
|---|---|---|---|---|---|
| **Date Begin - End:** | 10/19/2020 | **Drilling Company:** | StrataBore Inc. | **BORING LOG D-01** | |
| **Logged By:** | D. Marsau | **Drill Crew:** | Castillo | | |
| **Hor.-Vert. Datum:** | Not Available | **Drilling Equipment:** | CME-45 | **Hammer Type - Drop:** | 140 lb. Auto - 30 in. |
| **Plunge:** | -90 degrees | **Drilling Method:** | Continuous Flight Auger | | |
| **Weather:** | Overcast | **Exploration Diameter:** | 8" in. O.D. | | |

FIELD EXPLORATION

Latitude: 32.93208°
Longitude: -96.84678°
Surface Condition: Grass

| Depth (feet) | Graphical Log | Lithologic Description | Sample Type | Blow Counts(BC)= Uncorr. Blows/6 in. / Pocket Pen(PP)= tsf / Texas Cone(TC)= blows/6 in | Recovery (NR=No Recovery) | USCS Symbol | Water Content (%) | Dry Unit Wt. (pcf) | Passing #4 (%) | Passing #200 (%) | Liquid Limit | Plasticity Index (NP=NonPlastic) | Additional Tests/ Remarks |
|---|---|---|---|---|---|---|---|---|---|---|---|---|---|
| | | **6" TOPSOIL** | | PP=4.5+ | 6"" | | | | | | | | |
| | | **Fat CLAY (CH)**: dark brown and brown, moist, very stiff to hard, with calcareous nodules | | PP=3.5 | 9"" | | | | | | | | |
| | | | | PP=3.0 | 9"" | | | | | | | | |
| 5 | | | | PP=2.5 | 13"" | | | | | | | | |
| | | | | PP=2.5 | 14"" | CH | 29.4 | | 92 | 77 | 85 | 58 | |
| | | -light brown below 9 feet | | | | | | | | | | | |
| 10 | | | | | | | | | | | | | |
| | | -increase in sand, moist to wet below 13 feet | | BC=3<br>5<br>6 | 18"" | | | | | | | | |
| 15 | | | | | | | | | | | | | |
| | | - shaly, dark gray below 18 feet | | PP=4.5+ | 8"" | | | | | | | | |
| 20 | | | | | | | | | | | | | |
| 25 | | | | | | | | | | | | | |

The boring was terminated at approximately 20 ft. below ground surface. The boring was backfilled with auger cuttings on October 19, 2020.

GROUNDWATER LEVEL INFORMATION:
Groundwater was not observed during drilling or after completion.

GENERAL NOTES:
The boring was located in the field by a Kleinfelder professional using a handheld GPS device with a horizontal accuracy of approximately 15 feet.

KLEINFELDER
Bright People. Right Solutions.

| | | | |
|---|---|---|---|
| PROJECT NO.: 20212439.001A | BORING LOG D-01 | | BORING |
| DRAWN BY: DM | Alpha Road Connector - Vitruvian Phase IV<br>Brookhaven Community College<br>Farmers Branch, Texas | | D-01 |
| CHECKED BY: RJH | | | |
| DATE: | | | PAGE: 1 of 1 |

PLOTTED: 11/30/2020 08:42 PM BY: DMarsau
OFFICE FILTER: DALLAS
PROJECT NUMBER: 20212439.001A
gINT TEMPLATE: E:\KLF_STANDARD_GINT_LIBRARY_2021.GLB [_KLF_BORING/TEST PIT SOIL LOG]
gINT FILE: Klf_gint_master_2021

| | | | | | |
|---|---|---|---|---|---|
| **Date Begin - End:** | 10/19/2020 | **Drilling Company:** | StrataBore Inc. | **BORING LOG D-02** | |
| **Logged By:** | D. Marsau | **Drill Crew:** | Castillo | | |
| **Hor.-Vert. Datum:** | Not Available | **Drilling Equipment:** | CME-45 | **Hammer Type - Drop:** | 140 lb. Auto - 30 in. |
| **Plunge:** | -90 degrees | **Drilling Method:** | Continuous Flight Auger | | |
| **Weather:** | Overcast | **Exploration Diameter:** | 8" in. O.D. | | |

FIELD EXPLORATION

Latitude: 32.93090°
Longitude: -96.84520°
Surface Condition: Grass

| Depth (feet) | Graphical Log | Lithologic Description | Sample Type | Blow Counts(BC)= Uncorr. Blows/6 in. / Pocket Pen(PP)= tsf / Texas Cone(TC)= blows/6 in | Recovery (NR=No Recovery) | USCS Symbol | Water Content (%) | Dry Unit Wt. (pcf) | Passing #4 (%) | Passing #200 (%) | Liquid Limit | Plasticity Index (NP=NonPlastic) | Additional Tests/ Remarks |
|---|---|---|---|---|---|---|---|---|---|---|---|---|---|
| | | **6" TOPSOIL** | | PP=4.5+ | 7" | | | | | | | | |
| | | **Fat CLAY (CH)**: dark brown and gray, moist, hard, with calcareous nodules | | PP=4.5+ | 11" | CH | 27.3 | | 100 | 93 | 83 | 56 | |
| | | | | PP=4.5+ | 4" | | | | | | | | |
| 5 | | | | PP=NT | 3" | | | | | | | | |
| | | **Weathered LIMESTONE**: light yellowish brown, soft | | TC=50/5" 50/1" | | | | | | | | | |
| 10 | | | | TC=50/3" 50/1" | | | | | | | | | |
| | | **LIMESTONE**: light gray, hard | | | | | | | | | | | |
| 15 | | | | TC=50/1" 50/0.5" | | | | | | | | | |
| 20 | | | | | | | | | | | | | |

The boring was terminated at approximately 15 ft. below ground surface. The boring was backfilled with auger cuttings on October 19, 2020.

GROUNDWATER LEVEL INFORMATION:
Groundwater was not observed during drilling or after completion.

GENERAL NOTES:
The boring was located in the field by a Kleinfelder professional using a handheld GPS device with a horizontal accuracy of approximately 15 feet.

KLEINFELDER
Bright People. Right Solutions.

PROJECT NO.: 20212439.001A
DRAWN BY: DM
CHECKED BY: RJH
DATE:

BORING LOG D-02

Alpha Road Connector - Vitruvian Phase IV
Brookhaven Community College
Farmers Branch, Texas

BORING
D-02
PAGE: 1 of 1

PLOTTED: 11/30/2020 08:42 PM BY: DMarsau
OFFICE FILTER: DALLAS
PROJECT NUMBER: 20212439.001A
gINT TEMPLATE: E:\KLF_STANDARD_GINT_LIBRARY_2021.GLB [_KLF_BORING/TEST PIT SOIL LOG]
gINT FILE: Klf_gint_master_2021

| | | | | |
|---|---|---|---|---|
| **Date Begin - End:** | 12/15/2020 | **Drilling Company:** | Kleinfelder | **BORING LOG D-03** |
| **Logged By:** | D. Marsau | **Drill Crew:** | D. Marsau | |
| **Hor.-Vert. Datum:** | Not Available | **Drilling Equipment:** | Hand Auger | |
| **Plunge:** | -90 degrees | **Drilling Method:** | Hand Auger | |
| **Weather:** | Overcast | **Exploration Diameter:** | 3" in. O.D. | |

FIELD EXPLORATION

Latitude: 32.93175°
Longitude: -96.84498°
Surface Condition: Grass

| Depth (feet) | Graphical Log | Lithologic Description | Sample Type | Blow Counts(BC)= Uncorr. Blows/6 in. / Pocket Pen(PP)= tsf / Texas Cone(TC)= blows/6 in | Recovery (NR=No Recovery) | USCS Symbol | Water Content (%) | Dry Unit Wt. (pcf) | Passing #4 (%) | Passing #200 (%) | Liquid Limit | Plasticity Index (NP=NonPlastic) | Additional Tests/ Remarks |
|---|---|---|---|---|---|---|---|---|---|---|---|---|---|
| | | **6" TOPSOIL** | | | | | | | | | | | |
| | | **Fat CLAY (CH)**: dark brown and brown, moist, stiff, with calcareous nodules | | | | | | | | | | | |
| | | - light brown, with broken limestone pieces below 4 feet | | | | CH | 25.0 | | 98 | 79 | 60 | 38 | |
| 5 | | **Weathered LIMESTONE**: light brown, soft | | | | | | | | | | | |
| 10 | | | | | | | | | | | | | |

The boring was terminated at approximately 6 ft. below ground surface. The boring was backfilled with auger cuttings on December 15, 2020.

GROUNDWATER LEVEL INFORMATION:
Groundwater was not observed during drilling or after completion.

GENERAL NOTES:
The boring was located in the field by a Kleinfelder professional using a handheld GPS device with a horizontal accuracy of approximately 15 feet.

KLEINFELDER
Bright People. Right Solutions.

PROJECT NO.: 20212439.001A
DRAWN BY: DM
CHECKED BY: RJH
DATE:

BORING LOG D-03

Alpha Road Connector - Vitruvian Phase IV
Brookhaven Community College
Farmers Branch, Texas

BORING
D-03



PLOTTED: 12/29/2020 10:11 AM BY: DMarsau
OFFICE FILTER: DALLAS
PROJECT NUMBER: 20212439.001A
gINT FILE: Klf_gint_master_2021
gINT TEMPLATE: E:\KLF_STANDARD_GINT_LIBRARY_2021.GLB [_KLF_BORING/TEST PIT SOIL LOG]

| | | | | |
|---|---|---|---|---|
| **Date Begin - End:** | 12/15/2020 | **Drilling Company:** | Kleinfelder | **BORING LOG D-04** |
| **Logged By:** | D. Marsau | **Drill Crew:** | D. Marsau | |
| **Hor.-Vert. Datum:** | Not Available | **Drilling Equipment:** | Hand Auger | |
| **Plunge:** | -90 degrees | **Drilling Method:** | Hand Auger | |
| **Weather:** | Overcast | **Exploration Diameter:** | 3" in. O.D. | |

| Depth (feet) | Graphical Log | FIELD EXPLORATION<br>Latitude: 32.93152°<br>Longitude: -96.84580°<br>Surface Condition: Grass<br>Lithologic Description | Sample Type | Blow Counts(BC)= Uncorr. Blows/6 in. / Pocket Pen(PP)= tsf / Texas Cone(TC)= blows/6 in | Recovery (NR=No Recovery) | LABORATORY RESULTS<br>USCS Symbol | Water Content (%) | Dry Unit Wt. (pcf) | Passing #4 (%) | Passing #200 (%) | Liquid Limit | Plasticity Index (NP=NonPlastic) | Additional Tests/ Remarks |
|---|---|---|---|---|---|---|---|---|---|---|---|---|---|
| | | **6" TOPSOIL** | | | | | | | | | | | |
| | | **Fat CLAY (CH)**: dark brown and brown, moist, stiff, with calcareous nodules | | | | CH | 44.6 | | 99 | 87 | 80 | 49 | |
| 5 | | | | | | | | | | | | | |
| 10 | | | | | | | | | | | | | |

The boring was terminated at approximately 7 ft. below ground surface. The boring was backfilled with auger cuttings on December 15, 2020.

GROUNDWATER LEVEL INFORMATION:
Groundwater was not observed during drilling or after completion.

GENERAL NOTES:
The boring was located in the field by a Kleinfelder professional using a handheld GPS device with a horizontal accuracy of approximately 15 feet.

KLEINFELDER
Bright People. Right Solutions.

| | | | |
|---|---|---|---|
| PROJECT NO.: 20212439.001A | BORING LOG D-04 | | BORING |
| DRAWN BY: DM | Alpha Road Connector - Vitruvian Phase IV<br>Brookhaven Community College<br>Farmers Branch, Texas | | D-04 |
| CHECKED BY: RJH | | | |
| DATE: | | | PAGE: 1 of 1 |

PLOTTED: 12/29/2020 10:11 AM BY: DMarsau
OFFICE FILTER: DALLAS
PROJECT NUMBER: 20212439.001A
gINT FILE: Klf_gint_master_2021
gINT TEMPLATE: E:\KLF_STANDARD_GINT_LIBRARY_2021.GLB [_KLF_BORING/TEST PIT SOIL LOG]

KLEINFELDER

*Bright People. Right Solutions.*

# Appendix B

| Exploration ID | Approx. Sample Depth (ft.) | Sample No. | Sample Description | Moisture Content (%) | Dry Density (pcf) | Sieve Analysis | | | Atterberg Limits | | | Swell/Compression | Other Tests |
|---|---|---|---|---|---|---|---|---|---|---|---|---|---|
| | | | | | | Passing 3/4 inch Sieve (%) | Passing #4 Sieve (%) | Passing #200 Sieve (%) | LL | PL | PI | | |
| B-01 | 3.5 | U-3 | | 26.7 | 96 | | | | | | | | |
| B-01 | 6.5 | U-5 | LEAN CLAY WITH SAND (CL) | 29.2 | | | | 79 | 43 | 21 | 22 | | |
| B-01 | 8.0 | U-6 | | 39.4 | 83 | | | | | | | | |
| B-01 | 19.0 | U-10 | | 22.9 | 101 | | | | | | | | Unc. Comp. Str. = 1.68 tsf |
| B-01 | 30.0 | C-15 | | 14.6 | 120 | | | | | | | | Unc. Comp. Str. = 6.47 tsf |
| B-01 | 40.0 | C-19 | | 17.8 | 113 | | | | | | | | Unc. Comp. Str. = 6.75 tsf |
| B-02 | 3.5 | U-3 | | 14.9 | 116 | | | | | | | | |
| B-02 | 6.5 | U-5 | FAT CLAY (CH) | 18.6 | 109 | | | 95 | 66 | 27 | 39 | | |
| B-02 | 8.0 | U-6 | | 18.4 | | | | | | | | | Unc. Comp. Str. = 5.26 tsf |
| B-02 | 14.0 | | | 30.9 | | | | | | | | | |
| B-02 | 22.0 | | | 21.6 | 103 | | | | | | | | Unc. Comp. Str. = 3.38 tsf |
| B-02 | 35.0 | C-18 | | 11.2 | 128 | | | | | | | | Unc. Comp. Str. = 9.85 tsf |
| B-03 | 3.5 | U-3 | FAT CLAY WITH SAND (CH) | 18.9 | 107 | | | 81 | 58 | 26 | 32 | | |
| B-03 | 6.0 | | | 21.2 | 102 | | | | | | | | Unc. Comp. Str. = 7.06 tsf |
| B-03 | 6.5 | U-5 | | 22.0 | | | | | | | | | |
| B-03 | 8.0 | U-6 | | 25.0 | 98 | | | | | | | | |
| B-03 | 14.0 | U-8 | | 24.5 | | | | | | | | | |
| B-03 | 25.0 | C-13 | | 14.2 | 121 | | | | | | | | Unc. Comp. Str. = 13.5 tsf |
| B-03 | 35.0 | C-17 | | 18.5 | 113 | | | | | | | | Unc. Comp. Str. = 6.13 tsf |
| B-04 | 3.5 | U-3 | FAT CLAY (CH) | 16.8 | | | | 90 | 65 | 25 | 40 | | |
| B-04 | 6.5 | U-5 | | 19.1 | 107 | | | | | | | | |
| B-04 | 8.0 | U-6 | | 18.8 | | | | | | | | | Unc. Comp. Str. = 8.79 tsf |
| B-04 | 14.0 | U-8 | | 20.7 | 107 | | | | | | | | Unc. Comp. Str. = 5.15 tsf |
| B-04 | 35.0 | C-17 | | 17.8 | 112 | | | | | | | | Unc. Comp. Str. = 5.55 tsf |
| C-01 | 8.0 | U-5 | CLAYEY SAND (SC) | 24.2 | 107 | | | 36 | 43 | 22 | 21 | | Unc. Comp. Str. = 0.84 tsf |
| C-02 | 2.0 | U-2 | | 34.1 | | | | | | | | | |
| C-02 | 4.0 | S-3 | CLAYEY SAND (SC) | 12.6 | | | | 38 | 41 | 20 | 21 | | |
| P-01 | 2.0 | U-2 | FAT CLAY (CH) | 11.5 | | | | 95 | 71 | 27 | 44 | | |

KLEINFELDER
Bright People. Right Solutions.

PROJECT NO.: 137422
DRAWN BY: GW
CHECKED BY: RH
DATE: 11/8/2013
REVISED:

LABORATORY TEST RESULT SUMMARY

Alpha Road Connector - Vitruvian Phase IV
Brookhaven Community College
Farmers Branch, Texas

BORING
15

| Exploration ID | Approx. Sample Depth (ft.) | Sample No. | Sample Description | Moisture Content (%) | Dry Density (pcf) | Sieve Analysis | | | Atterberg Limits | | | Swell/Compression | Other Tests |
|---|---|---|---|---|---|---|---|---|---|---|---|---|---|
| | | | | | | Passing 3/4 inch Sieve (%) | Passing #4 Sieve (%) | Passing #200 Sieve (%) | LL | PL | PI | | |
| P-02 | 0.0 | U-1 | | 30.5 | | | | | | | | | |
| P-02 | 2.0 | U-2 | SANDY FAT CLAY (CH) | 14.0 | | | | 67 | 57 | 23 | 34 | | |
| P-02 | 4.0 | U-3 | | 17.2 | | | | | | | | | |
| P-02 | 6.0 | U-4 | | 23.5 | | | | | | | | | |
| P-03 | 0.0 | U-1 | FAT CLAY (CH) | 31.5 | | | | 91 | 63 | 29 | 34 | | |
| P-03 | 2.0 | U-2 | | 22.2 | | | | | | | | | |
| P-03 | 4.0 | U-3 | | 24.8 | | | | | | | | | |
| P-03 | 6.0 | U-4 | | 23.1 | | | | | | | | | |
| P-04 | 0.0 | U-1 | | 17.7 | | | | | | | | | |
| P-04 | 2.0 | U-2 | SANDY LEAN CLAY (CL) | 16.7 | | | | 51 | 38 | 21 | 17 | | |
| P-04 | 6.0 | U-4 | | 23.0 | | | | | | | | | |
| P-04 | 8.0 | U-5 | | 25.6 | | | | | | | | | |

KLEINFELDER
Bright People. Right Solutions.

| | |
|---|---|
| PROJECT NO.: | 137422 |
| DRAWN BY: | GW |
| CHECKED BY: | RH |
| DATE: | 11/8/2013 |
| REVISED: | |

LABORATORY TEST RESULT SUMMARY

Alpha Road Connector - Vitruvian Phase IV
Brookhaven Community College
Farmers Branch, Texas

BORING

16

KLEINFELDER
Bright People. Right Solutions.

Geotechnical Engineering, Enviromental Services, and
Construction Materials Engineering and Testing

# Swell at Overburden Pressure Test Results

**Project Name:** Alpha Road Connector
**Location:** Farmers Branch, Texas
**Material Description:** Lean clay, yellow/brown & brown, with calcerous nodules

**Project No.:** 137422
**Boring No.:** B-1
**Sample Depth (ft.):** 3.5' - 5.0'

**Tested By:** E. Arapi
**Date Tested:** 10/8/2013
**Oedometer ID:** 1

## Soil Classification Properties

| | |
|---|---|
| Liquid Limit = | NA |
| Plastic Limit = | NA |
| Plasticity Index = | NA |
| % Passing #200 Sieve = | NA |

| | Initial | Final |
|---|---|---|
| Load Applied (psf) = | 500 | 500 |
| Moisture Content (%) = | 26.7 | 27.0 |
| Wet Unit Weight (pcf) = | 121.8 | 122.0 |
| Dry Unit Weight (pcf) = | 96.1 | 96.1 |

**One-Dimensional Swell at Overburden Pressure = 0.0%**

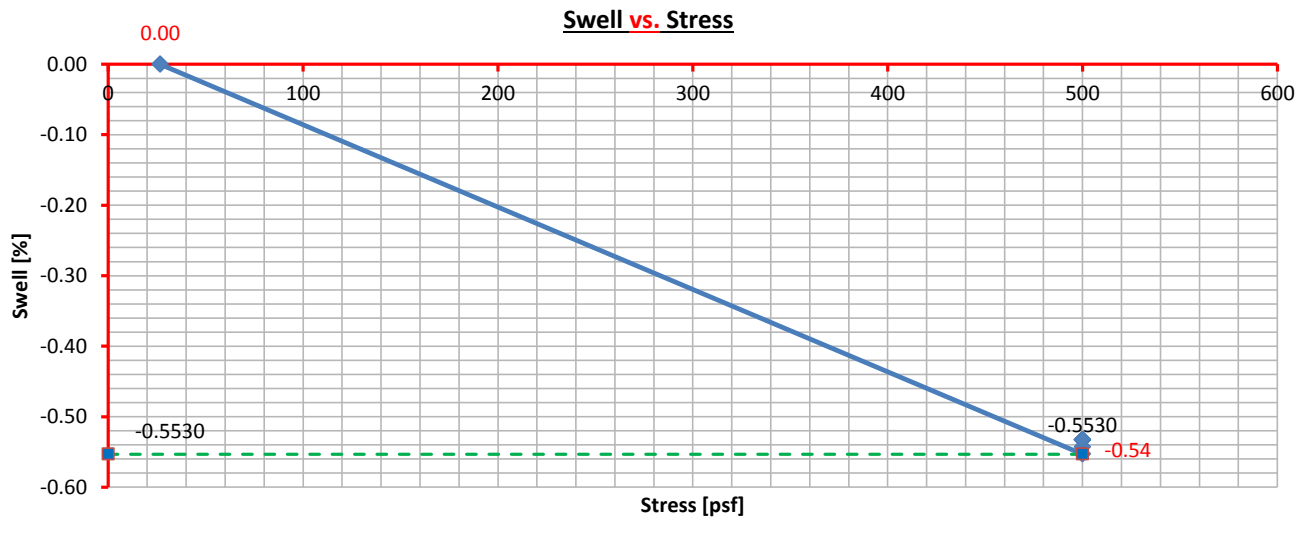

Geotechnical Engineering, Enviromental Services, and
Construction Materials Engineering and Testing

# Swell at Overburden Pressure Test Results

**Project Name:** Alpha Road Connector
**Location:**
**Material Description:** Lean clay, light brown, with fine gravel

**Project No.:** 137422
**Boring No.:** B-1
**Sample Depth (ft.):** 8.0' - 10.0'

**Tested By:** E. Arapi
**Date Tested:** 10/8/2013
**Oedometer ID:** 2

## Soil Classification Properties

| | |
|---|---|
| Liquid Limit = | NA |
| Plastic Limit = | NA |
| Plasticity Index = | NA |
| % Passing #200 Sieve = | NA |

| | Initial | Final |
|---|---|---|
| Load Applied (psf) = | 1000 | 1000 |
| Moisture Content (%) = | 39.4 | 38.5 |
| Wet Unit Weight (pcf) = | 115.2 | 114.7 |
| Dry Unit Weight (pcf) = | 82.7 | 82.8 |

**One-Dimensional Swell at Overburden Pressure = -0.1%**

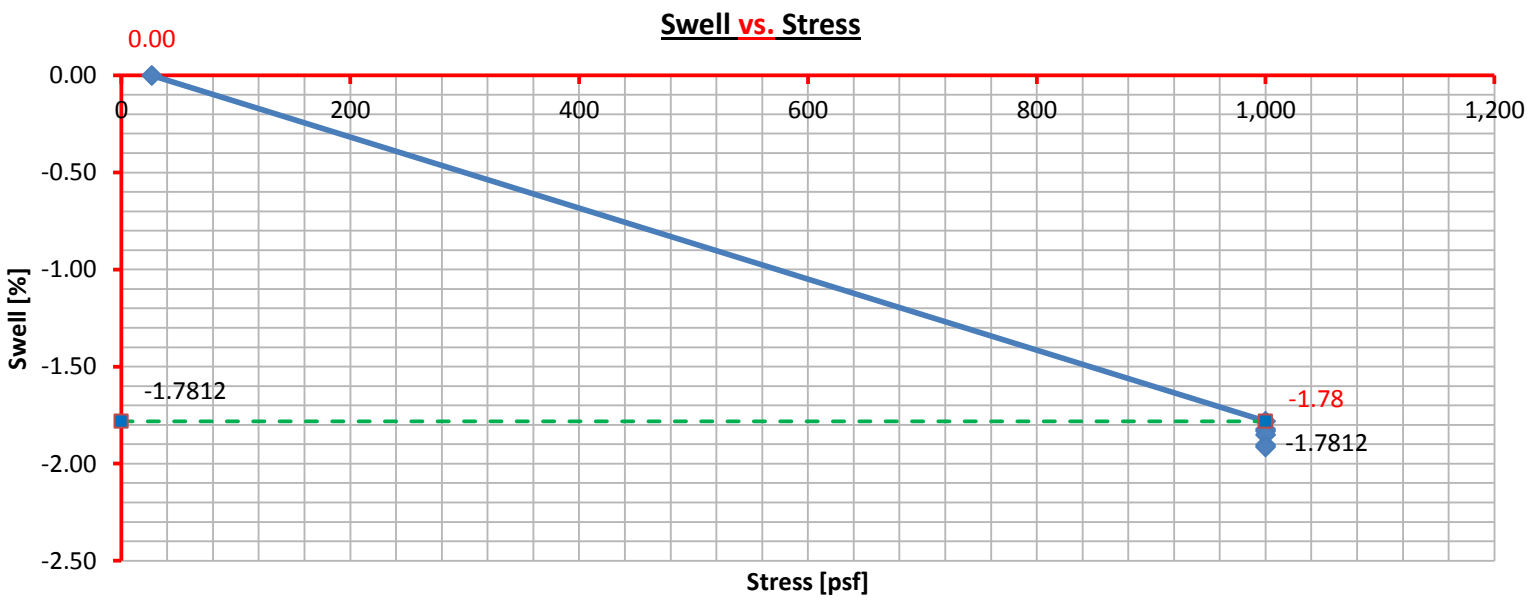

Geotechnical Engineering, Enviromental Services, and
Construction Materials Engineering and Testing

# Swell at Overburden Pressure Test Results

**Project Name:** Alpha Road Connector
**Location:** Farmers Branch, Texas
**Material Description:** Fat Clay, dark brown, with calcerous nodules

**Project No.:** 137422
**Boring No.:** B-2
**Sample Depth (ft.):** 3.5' - 5.0'

**Tested By:** E. Arapi
**Date Tested:** 10/8/2013
**Oedometer ID:** 3

## Soil Classification Properties

| | |
|---|---|
| Liquid Limit = | NA |
| Plastic Limit = | NA |
| Plasticity Index = | NA |
| % Passing #200 Sieve = | NA |

| | Initial | Final |
|---|---|---|
| Load Applied (psf) = | 500 | 32000 |
| Moisture Content (%) = | 14.9 | 17.6 |
| Wet Unit Weight (pcf) = | 133.0 | 126.4 |
| Dry Unit Weight (pcf) = | 115.8 | 107.5 |

**One-Dimensional Swell at Overburden Pressure = 7.7%**
**Swell Pressure = 31500 psf**

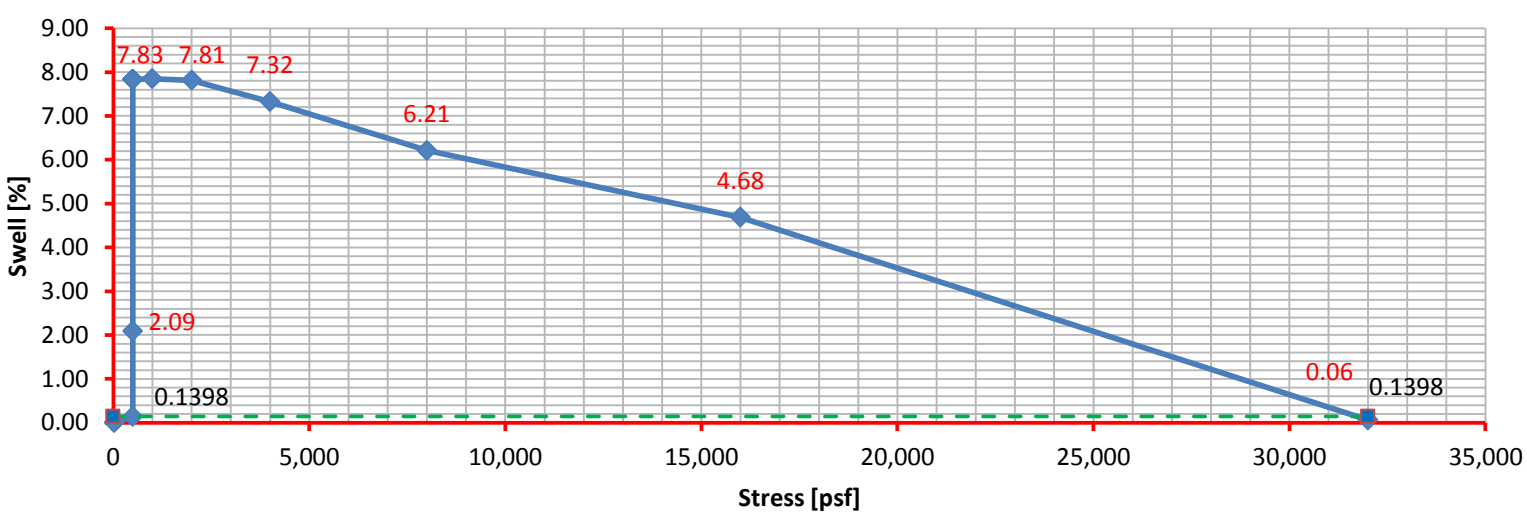

Geotechnical Engineering, Enviromental Services, and
Construction Materials Engineering and Testing

# Swell at Overburden Pressure Test Results

**Project Name:** Alpha Road Connector
**Location:** Farmers Branch, Texas
**Material Description:** Fat Clay, olive brown, with calcerous nodules

**Project No.:** 137422
**Boring No.:** B-2
**Sample Depth (ft.):** 6.5' - 8.0'

**Tested By:** E. Arapi
**Date Tested:** 10/8/2013
**Oedometer ID:** 4

## Soil Classification Properties

| | |
|---|---|
| Liquid Limit = | NA |
| Plastic Limit = | NA |
| Plasticity Index = | NA |
| % Passing #200 Sieve = | NA |

| | Initial | Final |
|---|---|---|
| Load Applied (psf) = | 875 | 28000 |
| Moisture Content (%) = | 19.7 | 21.0 |
| Wet Unit Weight (pcf) = | 129.5 | 122.0 |
| Dry Unit Weight (pcf) = | 108.2 | 100.8 |

**One-Dimensional Swell at Overburden Pressure = 7.3%**
**Swell Pressure = 24125 psf**

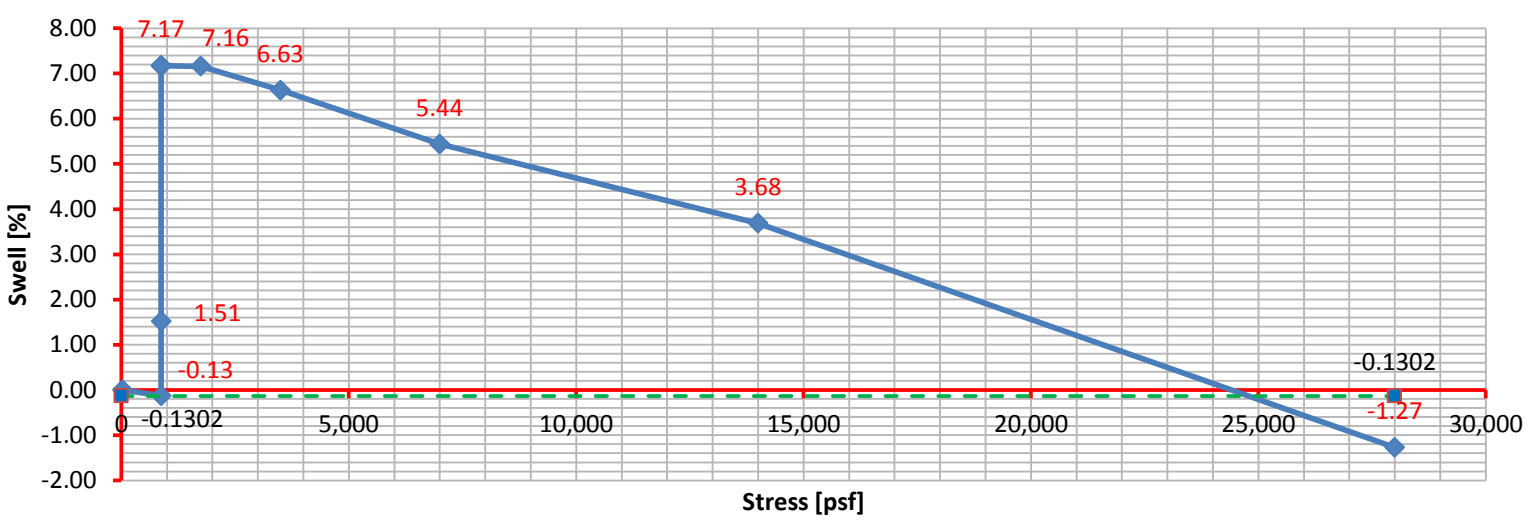

Geotechnical Engineering, Enviromental Services, and
Construction Materials Engineering and Testing

# Swell at Overburden Pressure Test Results

**Project Name:** Alpha Road Connector
**Location:** Farmers Branch, Texas
**Material Description:** Fat Clay, dark gray, with calcerous nodules & multi-colored shale partings

**Project No.:** 137422
**Boring No.:** B-3
**Sample Depth (ft.):** 3.5' - 5.0'

**Tested By:** E. Arapi
**Date Tested:** 10/8/2013
**Oedometer ID:** 5

## Soil Classification Properties

| | |
|---|---|
| Liquid Limit = | NA |
| Plastic Limit = | NA |
| Plasticity Index = | NA |
| % Passing #200 Sieve = | NA |

| | Initial | Final |
|---|---|---|
| Load Applied (psf) = | 500 | 32000 |
| Moisture Content (%) = | 19.6 | 20.9 |
| Wet Unit Weight (pcf) = | 127.7 | 120.9 |
| Dry Unit Weight (pcf) = | 106.8 | 100.0 |

**One-Dimensional Swell at Overburden Pressure = 6.9%**
**Swell Pressure = 24500 psf**

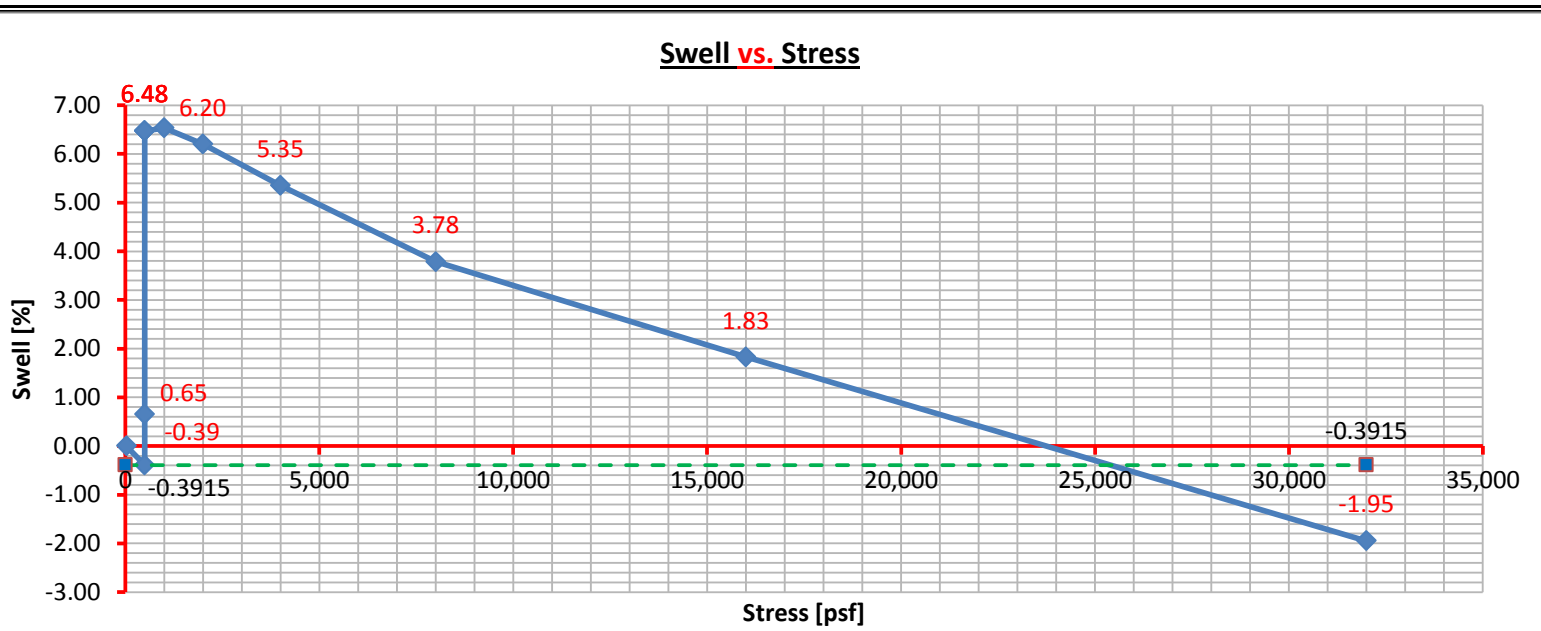

Geotechnical Engineering, Enviromental Services, and
Construction Materials Engineering and Testing

# Swell at Overburden Pressure Test Results

**Project Name:** Alpha Road Connector
**Location:** Farmers Branch, Texas
**Material Description:** Fat Clay, dark brown, with gray shale partings

**Project No.:** 137422
**Boring No.:** B-3
**Sample Depth (ft.):** 8.0' - 10.0'

**Tested By:** E. Arapi
**Date Tested:** 10/8/2013
**Oedometer ID:** 6

## Soil Classification Properties

| | |
|---|---|
| Liquid Limit = | NA |
| Plastic Limit = | NA |
| Plasticity Index = | NA |
| % Passing #200 Sieve = | NA |

| | Initial | Final |
|---|---|---|
| Load Applied (psf) = | 1000 | 1000 |
| Moisture Content (%) = | 25.0 | 26.6 |
| Wet Unit Weight (pcf) = | 123.1 | 124.0 |
| Dry Unit Weight (pcf) = | 98.5 | 98.0 |

**One-Dimensional Swell at Overburden Pressure = 0.5%**

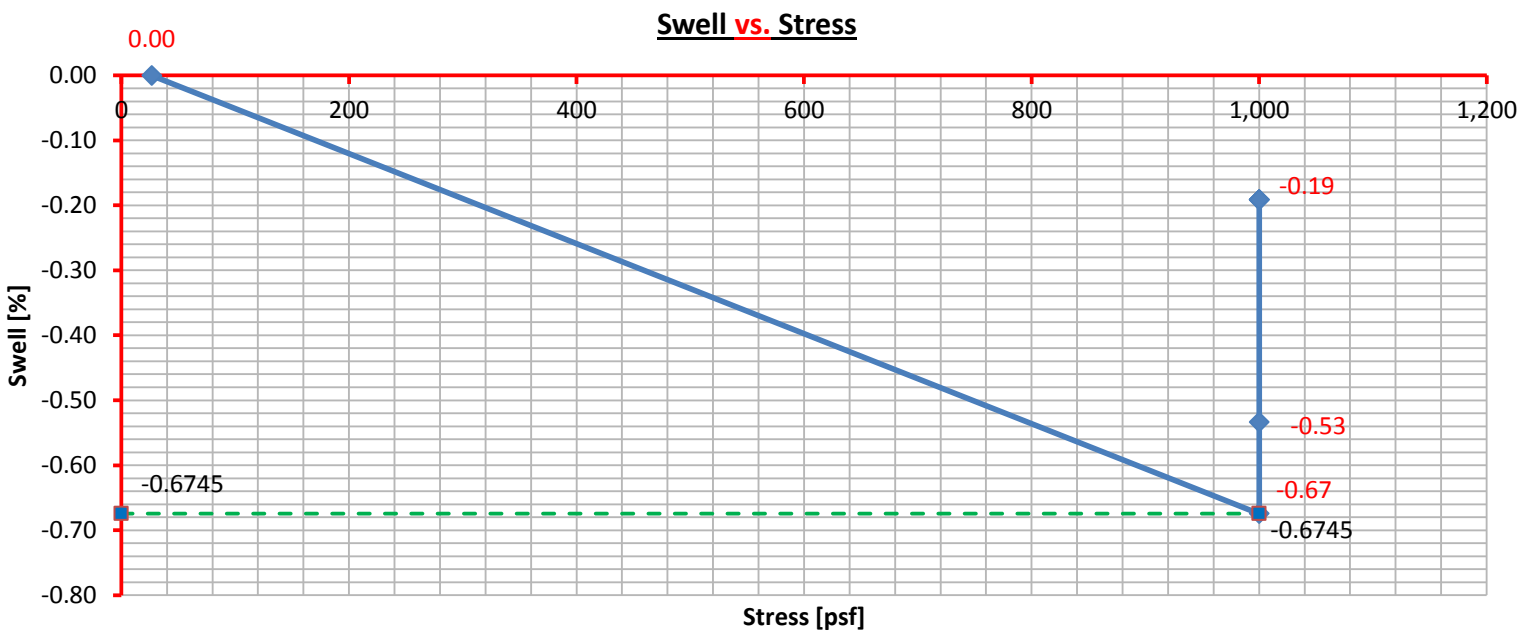

Geotechnical Engineering, Enviromental Services, and
Construction Materials Engineering and Testing

# Swell at Overburden Pressure Test Results

**Project Name:** Alpha Road Connector
**Location:** Farmers Branch, Texas
**Material Description:** Fat Clay, brown, with calcerous nodules

**Project No.:** 137422
**Boring No.:** B-4
**Sample Depth (ft.):** 6.5' - 8.0'

**Tested By:** E. Arapi
**Date Tested:** 10/8/2013
**Oedometer ID:** 7

## Soil Classification Properties

| | |
|---|---|
| Liquid Limit = | NA |
| Plastic Limit = | NA |
| Plasticity Index = | NA |
| % Passing #200 Sieve = | NA |

| | Initial | Final |
|---|---|---|
| Load Applied (psf) = | 875 | 16000 |
| Moisture Content (%) = | 19.1 | 21.0 |
| Wet Unit Weight (pcf) = | 127.4 | 123.6 |
| Dry Unit Weight (pcf) = | 107.0 | 102.1 |

**One-Dimensional Swell at Overburden Pressure = 4.7%**
**Swell Pressure = 13525 psf**

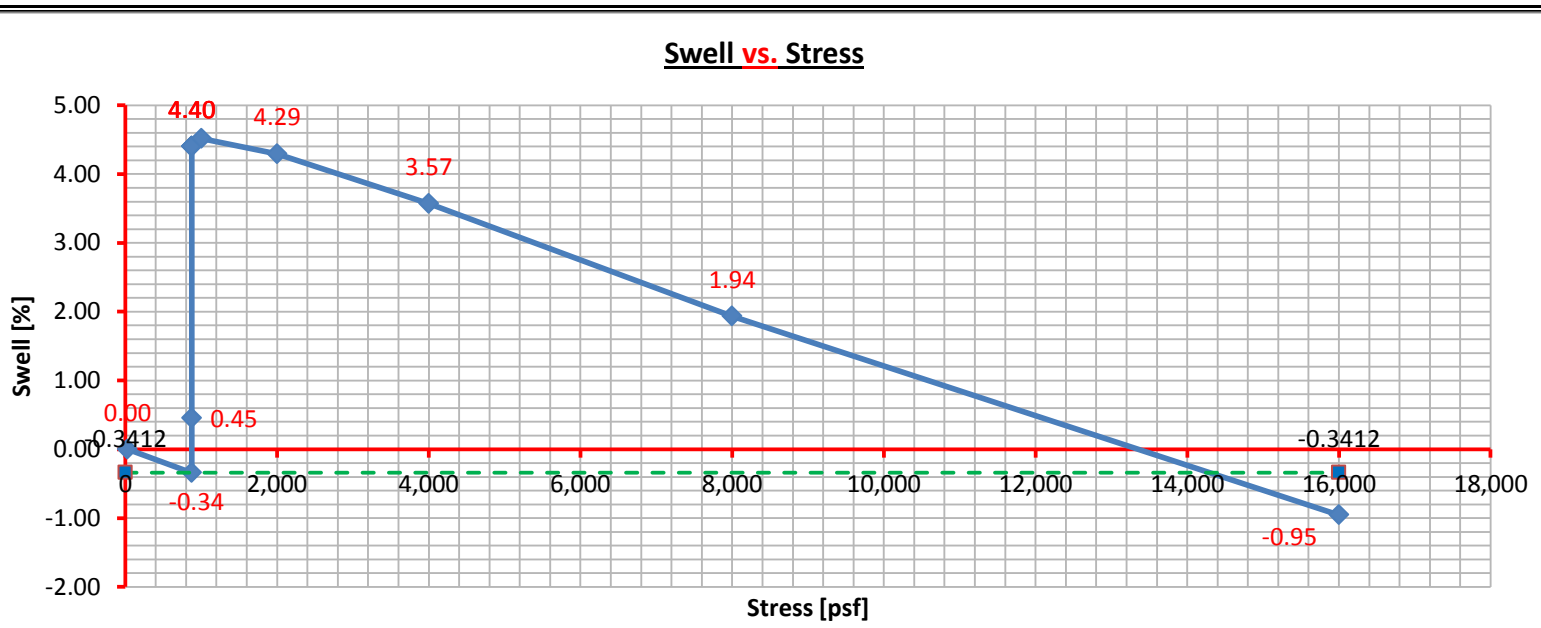

Geotechnical Engineering, Enviromental Services, and
Construction Materials Engineering and Testing

# Swell at Overburden Pressure Test Results

**Project Name:** Alpha Road Connector
**Location:** Farmers Branch, Texas
**Material Description:** Sandy clay, brown & light brown

**Project No.:** 137422
**Boring No.:** C-1
**Sample Depth (ft.):** 8.0' - 10.0'

**Tested By:** E. Arapi
**Date Tested:** 10/8/2013
**Oedometer ID:** 6

## Soil Classification Properties

| | |
|---|---|
| Liquid Limit = | NA |
| Plastic Limit = | NA |
| Plasticity Index = | NA |
| % Passing #200 Sieve = | NA |

| | Initial | Final |
|---|---|---|
| Load Applied (psf) = | 1000 | 1000 |
| Moisture Content (%) = | 26.5 | 26.0 |
| Wet Unit Weight (pcf) = | 123.0 | 122.7 |
| Dry Unit Weight (pcf) = | 97.2 | 97.4 |

**One-Dimensional Swell at Overburden Pressure = -0.2%**

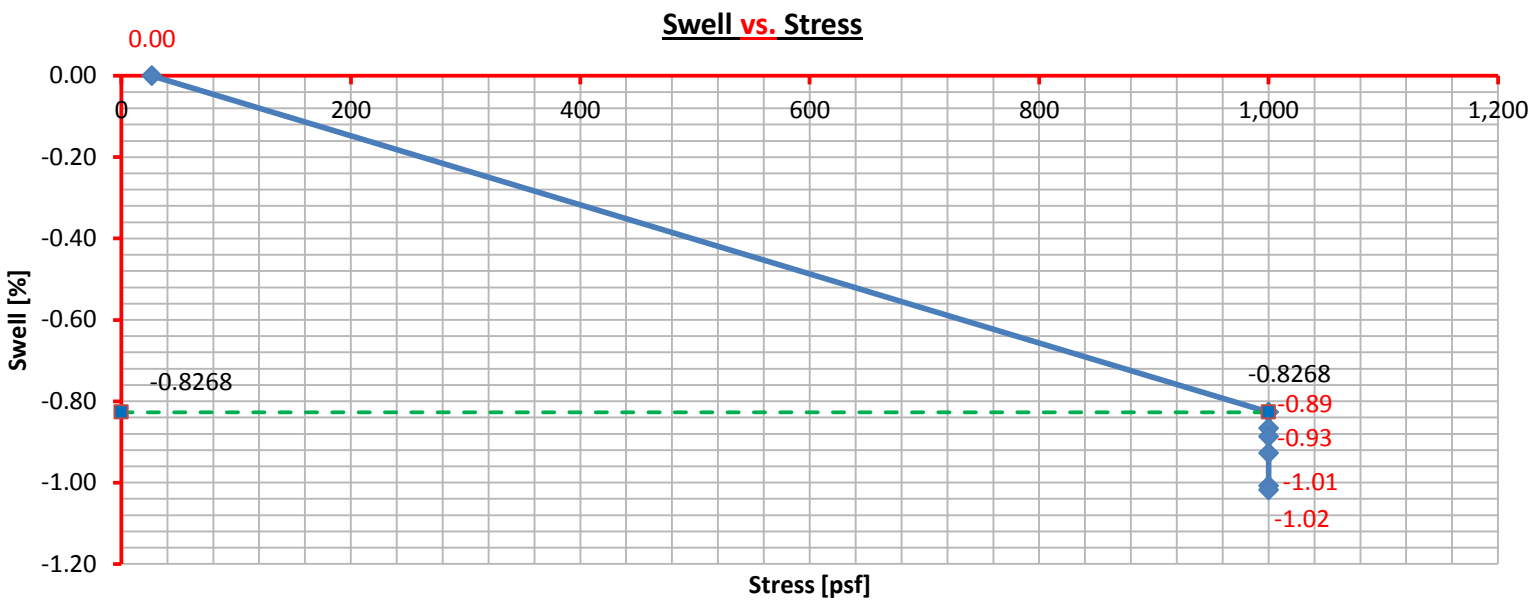

KLEINFELDER
Bright People. Right Solutions.

# pH Lime Series Test Results

**Project Name:** Alpha Road Connector
**Project Location:** Farmers Branch, Texas
**Material Description:** Fat Clay, dark brown

| | | | |
|---|---|---|---|
| **Project No.:** | 137422 | **Tested By:** | R. Brewer |
| **Boring No.:** | P-1 | **Date Tested:** | 11/13/13 |
| **Depth (ft.):** | 1.0' - 3.0' | **pH Meter ID:** | 54549 |

**Soil Classification Properties:**

| | |
|---|---|
| Liquid Limit = | 71 |
| Plastic Limit = | 27 |
| Plasticity Index = | 44 |
| % Passing #200 Sieve = | 95 |

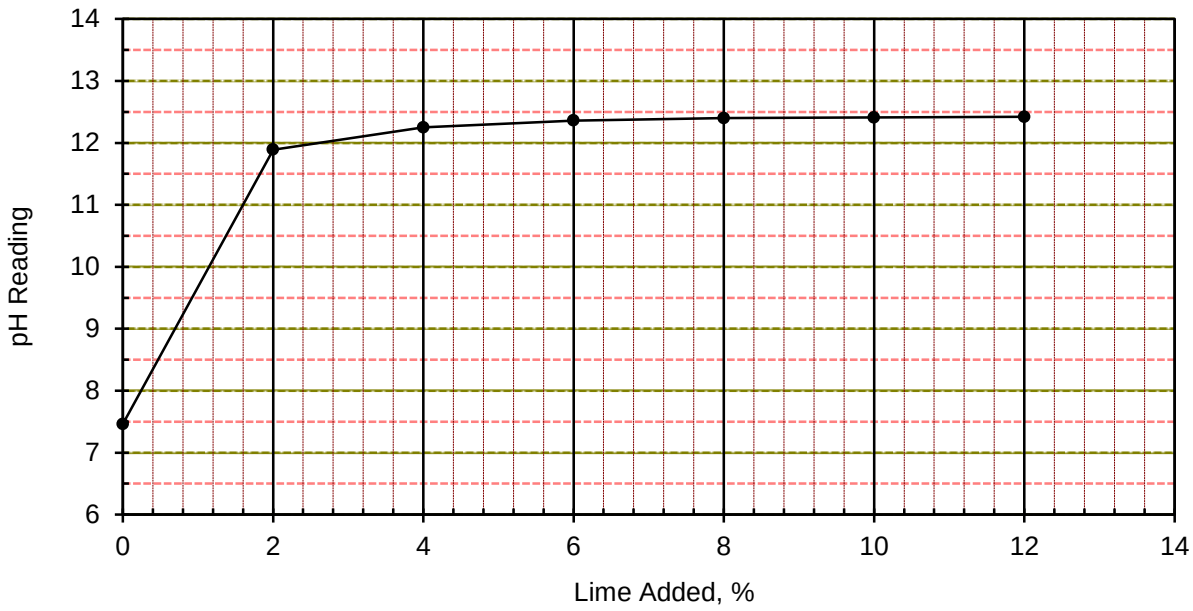


The results shown on this report are for the exclusive use of the client for whom they were obtained and apply only to the samples tested and/or inspected. They are not intended to be indicative of the qualities of apparently identical products. The use of our name must receive prior written approval. Reports must be reproduced in their entirety. Test method based on ASTM C 977 (Eades and Grim).

KLEINFELDER
Bright People. Right Solutions.

# pH Lime Series Test Results

**Project Name:** Alpha Road Connector
**Project Location:** Farmers Branch, Texas
**Material Description:** Fat Clay, light brown & dark brown

**Project No.:** 137422
**Boring No.:** C-1
**Depth (ft.):** 1.0' - 4.0'
**Tested By:** R. Brewer
**Date Tested:** 11/13/13
**pH Meter ID:** 54549

| % Lime Added | pH Reading |
|---|---|
| 0 | 7.53 |
| 2 | 12.03 |
| 4 | 12.28 |
| 6 | 12.36 |
| 8 | 12.40 |
| 10 | 12.41 |
| 12 | 12.43 |

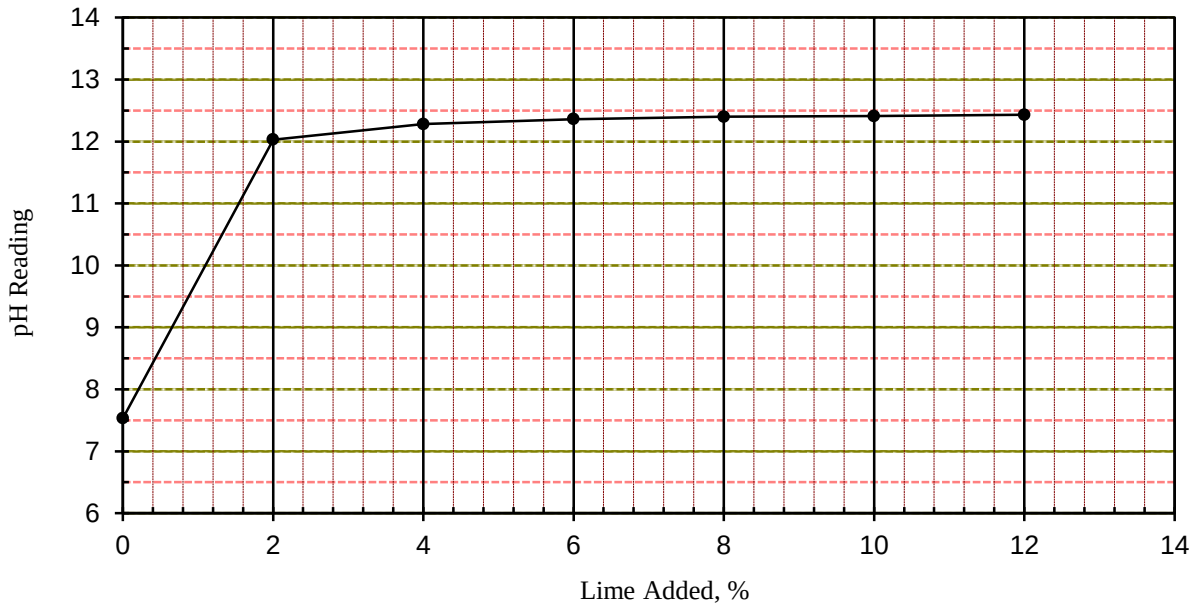


The results shown on this report are for the exclusive use of the client for whom they were obtained and apply only to the samples tested and/or inspected. They are not intended to be indicative of the qualities of apparently identical products. The use of our name must receive prior written approval. Reports must be reproduced in their entirety. Test method based on ASTM C 977 (Eades and Grim).

ADDISON PUBLIC WORKS & ENGINEERING SERVICES

Kimley»Horn
2201 West Royal Lane, Irving, Texas 75063
kimley-horn.com 214.420.5600
Texas Firm Registration No. F-928

**Addendum No. 1**

**BELLA LANE SOUTH EXTENSTION & ALPHA ROAD CONNECTOR**

**TOWN OF ADDISON, TEXAS**
**PUBLIC WORKS AND ENGINEERING SERVICES**
**BID NUMBER 21-69**

**10/12/2021**

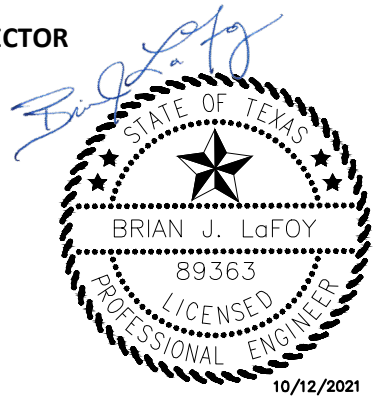


To: All Plan Holders of Record

This addendum forms part of the Contract Documents and modifies the Contract Documents and Specifications as noted below. Acknowledge receipt of the Addendum in the space provided on the Proposal Form and on the outer envelope of the Bid Proposal. Failure to acknowledge receipt of this Addendum may subject the Bidder to disqualification.

This addendum consists of 3 pages and 3 attachments.

**QUESTIONS RECEIVED ON CIVCAST AS OF 10/08/21 at 5:00 PM CST. NOTE, QUESTIONS RECEIVED AFTER 10/08/21 WILL BE ANSWERED IN ADDENDUM NO. 2**

1. What is the estimated cost range?

   Answer: The opinion of probable construction cost is not available for this project.

2. The bridge sidewalk bid quantity (490 SF) appears to be incorrect. I get (7' X 82.75' = 579 SF on the bridge) and (7' X 57.32' = 401 SF on the approach slabs). Please confirm the bid quantity.

   Answer: Item B6, BRIDGE SIDEWALK (HPC) bid quantity has been updated from 490 SF to 980 SF.

3. Where is the bid item for "Select Fill" shown on Sheets C5.01 C11.01?

   Answer: "Select Fill" shown on sheets C5.01 and C11.01 will constructed, measured, and paid for in accordance with Item H3, BORROW AND SPOIL (DETENTION POND AND CREEK) (SELECT FILL).

4. How many feet of penetration into the bearing strata is required for the drill shafts at the bridge?

   Answer: Reference Bridge Layout Plan and Profile Notes, Note 6, on sheet C5.01. Extend drilled shafts to the length shown or deeper necessary to obtain a minimum penetration of twelve (12) feet into the bearing strata.

5. Will any of the exposed concrete on the bridge require paint or opaque sealer?

   Answer: Exposed concrete on the bridge does not require paint or opaque sealer.

6. Will the steel railing on top of the C221 bridge rail received a galvanized finish only?

   Answer: The steel rail for the C221 combination rail only requires a galvanized finish. Galvanizing of steel rail shall be completed in accordance with TxDOT Item 445, "Galvanizing".

7. Is access to the south end of the new right of way for Bella Lane allowed through the College?

   Answer: Contractor shall coordinate directly with the Dallas College Brookhaven Campus to access the new right of way for Bella Lane from the south end. A written agreement must be submitted to the Town of Addison prior accessing the new right of way for Bella Lane from the south end.

8. After Delete/Replace, 109.5.2 appears to reflect 10% retainage for this project. Please confirm.

   Answer: The retainage value for this project will be 5% in accordance with NCTCOG Item 109.5.2. Retainage.

9. Item P1 Mobilization shows a maximum of 5%. That is insufficient for this project, especially with a projected retainage of 10%. Please consider revising this to 10%.

   Answer: Item P1, MOBILIZATION (5% MAX) maximum amount will remain at 5%.

10. Sheet IS-2 Insurance requirements is labelled for Airport Northwest Drainage Ditch Improvements. Will the insurance requirements for this project be the same?

    Answer: Insurance requirements will remain the same. Project relevant information has been updated. Reference revised document Section IS, Additional Insurance Requirements, Town of Addison.

11. Would you please post the pre-bid meeting attendees list?

    Answer: The pre-bid sign in has been uploaded to Civcast.

QUESTIONS ASKED AT PRE-BID

1. Will pre-bid sign in sheet be uploaded to Civcast?

   Answer: The pre-bid sign in has been uploaded to Civcast.

2. Will an addendum be issued?

   Answer: This addendum is intended to address revisions and answers to questions received as of 10/08/2021 at 5:00pm. The deadline for any additional questions is 5:00p.m. on Wednesday, October 13th. If needed an additional addendum will be issued no later than 5:00p.m. on Monday, October 18th.

3. Are CAD files available to bidders?

   Answer: A release form has been provided on Civcast to allow bidders to request CAD files.

4. Are earthwork quantities available to bidders?

   Answer: CAD files are being made available to bidders.

5. Can existing topsoil be stripped, stockpiled and replaced on site?

   Answer: The Town of Addison has no objections to stripping and reusing topsoil at the site.

6. What stabilization is required in the center of the roundabout?

   Answer: Sod is required. Reference revised plan sheet C9.02.

7. Why is there no typical section from STA 10+76 to STA 11+58.

   Answer: The typical section varies in that area. Reference revised plan sheet C1.10.

**CHANGES TO SPECIFICATIONS**

1. Section SP – Special Provisions

   Page – SP68 Remove, "**R. Delete Section 109.5.2 of the General Provisions and replace with the following:**

   **"Ten-percent (10%) retainage shall be withheld until 40 days after Final Completion.""**

2. Section PF – Proposal Form

   Replace the Bid Schedule with the attached.

3. Section IS – Additional Insurance Requirements

   Replace Section IS, Additional Insurance Requirements, Town of Addison with the attached.

**CHANGES TO PLANS**

1. Replace PLAN SHEETS C1.10, C3.07, C3.08, C4.13, C7.01, C7.02, C7.03, C8.01, C9.02, C10.02, C11.01 and C11.02 with the plan sheets attached. Revisions have been noted on each sheet.

END OF ADDENDUM NO. 1

| Item No. | Name of Pay Item with Unit Price in Words | Est. Quantity | Unit | Unit Bid Price | Amount Bid |
|---|---|---|---|---|---|
| **BASE BID - STREET IMPROVEMENTS** | | | | | |
| **P1** | MOBILIZATION (5% MAX) | 1 | LS | | |
| | Complete in Place, for the Sum of<br>_____ Dollars and<br>_____ Cents per unit | | | $ | $ |
| **P2** | BARRICADES, SIGNS, AND TRAFFIC HANDLING | 1 | LS | | |
| | Complete in Place, for the Sum of<br>_____ Dollars and<br>_____ Cents per unit | | | $ | $ |
| **P3** | PROJECT SIGN | 2 | EA | | |
| | Complete in Place, for the Sum of<br>_____ Dollars and<br>_____ Cents per unit | | | $ | $ |
| **P4** | GENERAL SITE PREPARATION | 1 | LS | | |
| | Complete in Place, for the Sum of<br>_____ Dollars and<br>_____ Cents per unit | | | $ | $ |
| **P5** | REMOVE EX HEADWALL | 1 | EA | | |
| | Complete in Place, for the Sum of<br>_____ Dollars and<br>_____ Cents per unit | | | $ | $ |
| **P6** | REMOVAL OF EX 54" RCP | 5 | LF | | |
| | Complete in Place, for the Sum of<br>_____ Dollars and<br>_____ Cents per unit | | | $ | $ |
| **P7** | REMOVE EXISTING CONCRETE SIDEWALK/RAMPS | 425 | SY | | |
| | Complete in Place, for the Sum of<br>_____ Dollars and<br>_____ Cents per unit | | | $ | $ |
| **P8** | REMOVE EXISTING ASPHALT PAVEMENT | 480 | SY | | |
| | Complete in Place, for the Sum of<br>_____ Dollars and<br>_____ Cents per unit | | | $ | $ |
| **P9** | REMOVE EXISTING TREES | 116 | EA | | |
| | Complete in Place, for the Sum of<br>_____ Dollars and<br>_____ Cents per unit | | | $ | $ |
| **P10** | UNCLASSIFIED STREET EXCAVATION | 1 | LS | | |
| | Complete in Place, for the Sum of<br>_____ Dollars and<br>_____ Cents per unit | | | $ | $ |
| **P11** | BORROW AND SPOIL (ROADWAY) | 1 | LS | | |
| | Complete in Place, for the Sum of<br>_____ Dollars and<br>_____ Cents per unit | | | $ | $ |
| **P12** | MOISTURE TREATED SUBGRADE | 7,180 | SY | | |
| | Complete in Place, for the Sum of<br>_____ Dollars and<br>_____ Cents per unit | | | $ | $ |

| Item No. | Name of Pay Item with Unit Price in Words | Est. Quantity | Unit | Unit Bid Price | Amount Bid |
|---|---|---|---|---|---|
| **P13** | 6" LIME STABILIZED SUBGRADE | 1,145 | SY | | |
| | Complete in Place, for the Sum of<br>_____ Dollars and<br>_____ Cents per unit | | | $ | $ |
| **P14** | HYDRATED LIME | 25 | TON | | |
| | Complete in Place, for the Sum of<br>_____ Dollars and<br>_____ Cents per unit | | | $ | $ |
| **P15** | 4" TYP B HMAC (TXDOT) | 30 | TON | | |
| | Complete in Place, for the Sum of<br>_____ Dollars and<br>_____ Cents per unit | | | $ | $ |
| **P16** | 8" REINFORCED CONCRETE PAVEMENT (STREET) | 6,615 | SY | | |
| | Complete in Place, for the Sum of<br>_____ Dollars and<br>_____ Cents per unit | | | $ | $ |
| **P17** | 10" PORTLAND CEMENT CONC PAVEMENT W/ 6" MONO CURB ) | 1,050 | SY | | |
| | Complete in Place, for the Sum of<br>_____ Dollars and<br>_____ Cents per unit | | | $ | $ |
| **P18** | 6" CURB AND GUTTER | 875 | LF | | |
| | Complete in Place, for the Sum of<br>_____ Dollars and<br>_____ Cents per unit | | | $ | $ |
| **P19** | REINFORCED CONCRETE STREET HEADERS | 540 | LF | | |
| | Complete in Place, for the Sum of<br>_____ Dollars and<br>_____ Cents per unit | | | $ | $ |
| **P20** | 5" CONCRETE SIDEWALK | 3,100 | SY | | |
| | Complete in Place, for the Sum of<br>_____ Dollars and<br>_____ Cents per unit | | | $ | $ |
| **P21** | ACESSIBLE RAMP | 12 | EA | | |
| | Complete in Place, for the Sum of<br>_____ Dollars and<br>_____ Cents per unit | | | $ | $ |
| **P22** | RAIL (HANDRAIL) (TY F) | 35 | LF | | |
| | Complete in Place, for the Sum of<br>_____ Dollars and<br>_____ Cents per unit | | | $ | $ |
| **P23** | INSTALL NEW SIGN AND SIGN POST ASSEMBLY | 20 | EA | | |
| | Complete in Place, for the Sum of<br>_____ Dollars and<br>_____ Cents per unit | | | $ | $ |
| **P24** | REFL PAV MRKG TY I & TY II (W) 4" SOLID | 3,300 | LF | | |
| | Complete in Place, for the Sum of<br>_____ Dollars and<br>_____ Cents per unit | | | $ | $ |

| Item No. | Name of Pay Item with Unit Price in Words | Est. Quantity | Unit | Unit Bid Price | Amount Bid |
|---|---|---|---|---|---|
| **P25** | REFL PAV MRKG TY I & TY II (Y) 4" SOLID | 3,050 | LF | | |
| | Complete in Place, for the Sum of<br>_____ Dollars and<br>_____ Cents per unit | | | $ | $ |
| **P26** | REFL PAV MRKG TY I & TY II (Y) 4" BROKEN | 140 | LF | | |
| | Complete in Place, for the Sum of<br>_____ Dollars and<br>_____ Cents per unit | | | $ | $ |
| **P27** | REFL PAV MRKG TY I & TY II (W) ARROW | 3 | EA | | |
| | Complete in Place, for the Sum of<br>_____ Dollars and<br>_____ Cents per unit | | | $ | $ |
| **P28** | REFL PAV MRKG TY I & TY II (W) 24" STOP BAR MARKING | 31 | LF | | |
| | Complete in Place, for the Sum of<br>_____ Dollars and<br>_____ Cents per unit | | | $ | $ |
| **P29** | REFL PAV MRKG TY I & TY II (W) 5' X 8' CROSSWALK WITH 5' SPACE | 3 | EA | | |
| | Complete in Place, for the Sum of<br>_____ Dollars and<br>_____ Cents per unit | | | $ | $ |
| **P30** | REFL PAV MRKG TY I & TY II (W) 24"X 8" CROSSWALK WITH 4' SPACE | 15 | EA | | |
| | Complete in Place, for the Sum of<br>_____ Dollars and<br>_____ Cents per unit | | | $ | $ |
| **P31** | REFL PAV MRKG TY I (W) 24" TRIANGLE | 21 | EA | | |
| | Complete in Place, for the Sum of<br>_____ Dollars and<br>_____ Cents per unit | | | $ | $ |
| **P32** | REMOVE AND RELOCATE EX GATE | 1 | EA | | |
| | Complete in Place, for the Sum of<br>_____ Dollars and<br>_____ Cents per unit | | | $ | $ |
| **P33** | ONCOR DUCT CROSSING COORDINATION | 1 | LS | | |
| | Complete in Place, for the Sum of<br>_____ Dollars and<br>_____ Cents per unit | | | $ | $ |

**TOTAL AMOUNT BID-BASE BID - STREET IMPROVEMENTS**

_____
(Total Amount Bid, Numerical Value)

_____ Dollars
and _____ Cents

***The Owner reserves the right to delete any bid items or portions thereof. If the Owner elects to delete any portions of the PROJECT from the contract, then the contract can be awarded on that basis.**

| Item No. | Name of Pay Item with Unit Price in Words | Est. Quantity | Unit | Unit Bid Price | Amount Bid |
|---|---|---|---|---|---|
| **BRIDGE OVER FARMERS BRANCH CREEK** | | | | | |
| **B1** | FLOWABLE BACKFILL | 443 | CY | | |
| | Complete in Place, for the Sum of<br>_____ Dollars and<br>_____ Cents per unit | | | $ | $ |
| **B2** | DRILL SHAFT (18 IN) | 148 | LF | | |
| | Complete in Place, for the Sum of<br>_____ Dollars and<br>_____ Cents per unit | | | $ | $ |
| **B3** | DRILL SHAFT (36 IN) | 296 | LF | | |
| | Complete in Place, for the Sum of<br>_____ Dollars and<br>_____ Cents per unit | | | $ | $ |
| **B4** | CL C CONC (ABUT) (HPC) | 100 | CY | | |
| | Complete in Place, for the Sum of<br>_____ Dollars and<br>_____ Cents per unit | | | $ | $ |
| **B5** | REINF CONC SLAB (HPC) | 2,648 | SF | | |
| | Complete in Place, for the Sum of<br>_____ Dollars and<br>_____ Cents per unit | | | $ | $ |
| 1 **B6** | BRIDGE SIDEWALK (HPC) | 980 | SF | | |
| | Complete in Place, for the Sum of<br>_____ Dollars and<br>_____ Cents per unit | | | $ | $ |
| **B7** | APPROACH SLAB (HPC) | 83 | CY | | |
| | Complete in Place, for the Sum of<br>_____ Dollars and<br>_____ Cents per unit | | | $ | $ |
| **B8** | PRESTR CONC I-GIRDER (TX40) | 329 | LF | | |
| | Complete in Place, for the Sum of<br>_____ Dollars and<br>_____ Cents per unit | | | $ | $ |
| **B9** | RIPRAP (CONC) (CL B) (RR8&RR9) | 76 | CY | | |
| | Complete in Place, for the Sum of<br>_____ Dollars and<br>_____ Cents per unit | | | $ | $ |
| **B10** | RIPRAP (STONE PROTECTION) (24 IN) | 1,470 | CY | | |
| | Complete in Place, for the Sum of<br>_____ Dollars and<br>_____ Cents per unit | | | $ | $ |
| **B11** | ELASTOMERIC BEARING (LAMINATED) | 8 | EA | | |
| | Complete in Place, for the Sum of<br>_____ Dollars and<br>_____ Cents per unit | | | $ | $ |
| **B12** | STR STEEL (MISCELLANEOUS BRIDGE) (BS-EJCP) | 186 | LB | | |
| | Complete in Place, for the Sum of<br>_____ Dollars and<br>_____ Cents per unit | | | $ | $ |

| Item No. | Name of Pay Item with Unit Price in Words | Est. Quantity | Unit | Unit Bid Price | Amount Bid |
|---|---|---|---|---|---|
| **B13** | RAIL (TY C221) (HPC) | 238 | LF | | |
| | Complete in Place, for the Sum of<br>_____ Dollars and<br>_____ Cents per unit | | | $ | $ |
| **B14** | SEALED EXPANSION JOINT (4 IN) (SEJ - M) | 51 | LF | | |
| | Complete in Place, for the Sum of<br>_____ Dollars and<br>_____ Cents per unit | | | $ | $ |
| **B15** | MTL BEAM GD FEN TRANS (THRIE-BEAM) | 3 | EA | | |
| | Complete in Place, for the Sum of<br>_____ Dollars and<br>_____ Cents per unit | | | $ | $ |
| **B16** | TERMINAL ANCHOR SECTION | 3 | EA | | |
| | Complete in Place, for the Sum of<br>_____ Dollars and<br>_____ Cents per unit | | | $ | $ |

**TOTAL AMOUNT BID-BRIDGE OVER FARMERS BRANCH CREEK**

_____
(Total Amount Bid, Numerical Value)

_____ Dollars
and _____ Cents

***The Owner reserves the right to delete any bid items or portions thereof. If the Owner elects to delete any portions of the PROJECT from the contract, then the contract can be awarded on that basis.**

| Item No. | Name of Pay Item with Unit Price in Words | Est. Quantity | Unit | Unit Bid Price | Amount Bid |
|---|---|---|---|---|---|
| **BASE BID - STORM SYSTEM IMPROVEMENTS** | | | | | |
| **D1** | 18" RCP CLASS III | 490 | LF | | |
| | Complete in Place, for the Sum of<br>_____ Dollars and<br>_____ Cents per unit | | | $ | $ |
| **D2** | 24" RCP CLASS III | 285 | LF | | |
| | Complete in Place, for the Sum of<br>_____ Dollars and<br>_____ Cents per unit | | | $ | $ |
| **D3** | 30" RCP CLASS III | 80 | LF | | |
| | Complete in Place, for the Sum of<br>_____ Dollars and<br>_____ Cents per unit | | | $ | $ |
| **D4** | 6' CURB INLET | 4 | EA | | |
| | Complete in Place, for the Sum of<br>_____ Dollars and<br>_____ Cents per unit | | | $ | $ |
| **D5** | CONCRETE HEADWALL (CHFW-0) | 3 | EA | | |
| | Complete in Place, for the Sum of<br>_____ Dollars and<br>_____ Cents per unit | | | $ | $ |
| **D6** | 18" RCP 2:1 SET TY II HEADWALL | 1 | EA | | |
| | Complete in Place, for the Sum of<br>_____ Dollars and<br>_____ Cents per unit | | | $ | $ |
| **D7** | 18" RCP 6:1 SET TY II HEADWALL | 4 | EA | | |
| | Complete in Place, for the Sum of<br>_____ Dollars and<br>_____ Cents per unit | | | $ | $ |
| **D8** | 24" RCP 6:1 SET TY II HEADWALL | 4 | EA | | |
| | Complete in Place, for the Sum of<br>_____ Dollars and<br>_____ Cents per unit | | | $ | $ |
| **D9** | RIPRAP (STONE PROTECTION) (12 IN) (CHFW-0 HEADWALL) | 12 | CY | | |
| | Complete in Place, for the Sum of<br>_____ Dollars and<br>_____ Cents per unit | | | $ | $ |
| **D10** | TRENCH EXCAVATION PROTECTION (STORM SYSTEM) | 855 | LF | | |
| | Complete in Place, for the Sum of<br>_____ Dollars and<br>_____ Cents per unit | | | $ | $ |

**TOTAL AMOUNT BID-BASE BID - STORM SYSTEM IMPROVEMENTS**

$ -

(Total Amount Bid, Numerical Value)

_____ Dollars

and _____ Cents

***The Owner reserves the right to delete any bid items or portions thereof. If the Owner elects to delete any portions of the PROJECT from the contract, then the contract can be awarded on that basis.**

| Item No. | Name of Pay Item with Unit Price in Words | Est. Quantity | Unit | Unit Bid Price | Amount Bid |
|---|---|---|---|---|---|
| **BASE BID - DETENTION POND IMPROVEMENTS** | | | | | |
| **H1** | UNCLASSIFIED POND AND CREEK EXCAVATION | 1 | LS | | |
| | Complete in Place, for the Sum of<br>_____ Dollars and<br>_____ Cents per unit | | | $ | $ |
| **H2** | BORROW AND SPOIL (DETENTION POND AND CREEK) | 1 | LS | | |
| | Complete in Place, for the Sum of<br>_____ Dollars and<br>_____ Cents per unit | | | $ | $ |
| **H3** | BORROW AND SPOIL (DETENTION POND AND CREEK) (SELECT FILL) | 1 | LS | | |
| | Complete in Place, for the Sum of<br>_____ Dollars and<br>_____ Cents per unit | | | $ | $ |
| 1 **H4** | RIPRAP (CONC) (CL B) (RR8&RR9) (DETENTION POND) | 6 | CY | | |
| | Complete in Place, for the Sum of<br>_____ Dollars and<br>_____ Cents per unit | | | $ | $ |
| **H5** | RIPRAP (STONE PROTECTION) (24 IN) (DETENTION POND) | 910 | CY | | |
| | Complete in Place, for the Sum of<br>_____ Dollars and<br>_____ Cents per unit | | | $ | $ |
| **H6** | CONCRETE OUTFALL STUCTURE | 7 | CY | | |
| | Complete in Place, for the Sum of<br>_____ Dollars and<br>_____ Cents per unit | | | $ | $ |

**TOTAL AMOUNT BID-BASE BID - DETENTION POND IMPROVEMENTS**

$ -

(Total Amount Bid, Numerical Value)

_____ Dollars

and _____ Cents

***The Owner reserves the right to delete any bid items or portions thereof. If the Owner elects to delete any portions of the PROJECT from the contract, then the contract can be awarded on that basis.**

| Item No. | Name of Pay Item with Unit Price in Words | Est. Quantity | Unit | Unit Bid Price | Amount Bid |
|---|---|---|---|---|---|
| **BASE BID - LANDSCAPE IMPROVEMENTS AND EROSION CONTROL** | | | | | |
| **L1** | HYDRAULIC MULCHING WITH 4" TOPSOIL | 45,459 | SY | | |
| | Complete in Place, for the Sum of<br>_____ Dollars and<br>_____ Cents per unit | | | $ | $ |
| **L2** | SEDIMENT CONTROL FENCE (INSTALL/MAINTAIN/REMOVE) | 7,475 | LF | | |
| | Complete in Place, for the Sum of<br>_____ Dollars and<br>_____ Cents per unit | | | $ | $ |
| **L3** | STABILIZED CONSTRUCTION EXIT/ENTRANCE | 180 | SY | | |
| | Complete in Place, for the Sum of<br>_____ Dollars and<br>_____ Cents per unit | | | $ | $ |
| **L4** | INLET PROTECTION (INSTALL/MAINTAIN/REMOVE) | 4 | EA | | |
| | Complete in Place, for the Sum of<br>_____ Dollars and<br>_____ Cents per unit | | | $ | $ |
| **L5** | ROCK CHECK DAM | 65 | LF | | |
| | Complete in Place, for the Sum of<br>_____ Dollars and<br>_____ Cents per unit | | | $ | $ |
| **L6** | STORM WATER POLLUTION PREVENTION PLAN | 1 | LS | | |
| | Complete in Place, for the Sum of<br>_____ Dollars and<br>_____ Cents per unit | | | $ | $ |

**TOTAL AMOUNT BID-TOTAL AMOUNT BID-BASE BID - DETENTION POND IMPROVEMENTS**

$ _____ -

(Total Amount Bid, Numerical Value)

_____ Dollars

and _____ Cents

***The Owner reserves the right to delete any bid items or portions thereof. If the Owner elects to delete any portions of the PROJECT from the contract, then the contract can be awarded on that basis.**

| Item No. | Name of Pay Item with Unit Price in Words | Est. Quantity | Unit | Unit Bid Price | Amount Bid |
|---|---|---|---|---|---|
| **BASE BID - WATER IMPROVEMENTS** | | | | | |
| **W1** | 8" PVC WATER LINE | 355 | LF | | |
| | Complete in Place, for the Sum of<br>_____ Dollars and<br>_____ Cents per unit | | | $ | $ |
| **W2** | 12" PVC WATER LINE | 575 | LF | | |
| | Complete in Place, for the Sum of<br>_____ Dollars and<br>_____ Cents per unit | | | $ | $ |
| **W3** | 8 " GATE VALVE | 2 | EA | | |
| | Complete in Place, for the Sum of<br>_____ Dollars and<br>_____ Cents per unit | | | $ | $ |
| **W4** | 12" GATE VALVE | 2 | EA | | |
| | Complete in Place, for the Sum of<br>_____ Dollars and<br>_____ Cents per unit | | | $ | $ |
| **W5** | FIRE HYDRANT ASSEMBLY | 1 | EA | | |
| | Complete in Place, for the Sum of<br>_____ Dollars and<br>_____ Cents per unit | | | $ | $ |
| **W6** | REMOVE EXISTING 12" AC WATER LINE | 8 | LF | | |
| | Complete in Place, for the Sum of<br>_____ Dollars and<br>_____ Cents per unit | | | $ | $ |
| **W7** | ABANDON EXISTING ASBESTOS PIPE IN PLACE | 500 | LF | | |
| | Complete in Place, for the Sum of<br>_____ Dollars and<br>_____ Cents per unit | | | $ | $ |
| **W8** | WATER TESTING | 1 | LS | | |
| | Complete in Place, for the Sum of<br>_____ Dollars and<br>_____ Cents per unit | | | $ | $ |
| **W9** | TRENCH EXCAVATION PROTECTION (WATER SYSTEM) | 930 | LF | | |
| | Complete in Place, for the Sum of<br>_____ Dollars and<br>_____ Cents per unit | | | $ | $ |

**TOTAL AMOUNT BID-BASE BID - WATER IMPROVEMENTS** $ _____ -

(Total Amount Bid, Numerical Value)

_____ Dollars

and _____ Cents

***The Owner reserves the right to delete any bid items or portions thereof. If the Owner elects to delete any portions of the PROJECT from the contract, then the contract can be awarded on that basis.**

| Item No. | Name of Pay Item with Unit Price in Words | Est. Quantity | Unit | Unit Bid Price | Amount Bid |
|---|---|---|---|---|---|
| **BASE BID - SANITARY SEWER IMPROVEMENTS** | | | | | |
| **SS1** | 8" PVC SSWR LINE | 315 | LF | | |
| | Complete in Place, for the Sum of<br>_____ Dollars and<br>_____ Cents per unit | | | $ | $ |
| **SS2** | 4' STANDARD MANHOLE | 1 | EA | | |
| | Complete in Place, for the Sum of<br>_____ Dollars and<br>_____ Cents per unit | | | $ | $ |
| **SS3** | CEMENT STABILIZED SAND ENCASEMENT (MIN. 10% CEMENT/CY) | 20 | LF | | |
| | Complete in Place, for the Sum of<br>_____ Dollars and<br>_____ Cents per unit | | | $ | $ |
| **SS4** | SANITARY SEWER CCTV INSPECTION | 1 | LS | | |
| | Complete in Place, for the Sum of<br>_____ Dollars and<br>_____ Cents per unit | | | $ | $ |
| **SS5** | TRENCH EXCAVATION PROTECTION (SANITARY SEWER IMPROVEMENTS) | 315 | LF | | |
| | Complete in Place, for the Sum of<br>_____ Dollars and<br>_____ Cents per unit | | | $ | $ |

**TOTAL AMOUNT BID-BASE BID - SANITARY SEWER IMPROVEMENTS**

$ _____ -

(Total Amount Bid, Numerical Value)

_____ Dollars

and _____ Cents

***The Owner reserves the right to delete any bid items or portions thereof. If the Owner elects to delete any portions of the PROJECT from the contract, then the contract can be awarded on that basis.**

| Item No. | Name of Pay Item with Unit Price in Words | Est. Quantity | Unit | Unit Bid Price | Amount Bid |
|---|---|---|---|---|---|
| **BASE BID - OWNER'S CONTINGENCY** | | | | | |
| **O1** | OWNER'S CONTINGENCY | 1 | LS | | |
| | Complete in Place, for the Sum of<br>Eighty Five Thousand Dollars and<br>Zero Cents per unit | | | $ 85,000.00 | $ 85,000.00 |

**TOTAL AMOUNT BID-BASE BID - OWNER'S CONTINGENCY**

$ 85,000.00

(Total Amount Bid, Numerical Value)

Dollars

and Cents

***The Owner reserves the right to delete any bid items or portions thereof. If the Owner elects to delete any portions of the PROJECT from the contract, then the contract can be awarded on that basis.**

**SECTION IS**

# ADDITIONAL INSURANCE REQUIREMENTS

1

**TOWN OF ADDISON, TEXAS**
**BELLA LANE SOUTH EXTENSION & ALPHA ROAD CONNECTOR**

## REQUIREMENTS

Contractors performing work on TOWN OF ADDISON property or public right-of-way shall provide the TOWN OF ADDISON a certificate of insurance or a copy of their insurance policy(s) (and including a copy of the endorsements necessary to meet the requirements and instructions contained herein) evidencing the coverages and coverage provisions identified herein within ten (10) days of request from TOWN OF ADDISON. Contractors shall provide TOWN OF ADDISON evidence that all subcontractors performing work on the project have the same types and amounts of coverages as required herein or that the subcontractors are included under the contractor's policy. Work shall not commence until insurance has been approved by TOWN OF ADDISON.

All insurance companies and coverages must be authorized by the Texas Department of Insurance to transact business in the State of Texas and must have a A.M. Best's rating A-:VII or greater.

Listed below are the types and minimum amounts of insurances required and which must be maintained during the term of the contract. TOWN OF ADDISON reserves the right to amend or require additional types and amounts of coverages or provisions depending on the nature of the work.

| TYPE OF INSURANCE | AMOUNT OF INSURANCE | PROVISIONS |
|---|---|---|
| 1. **Workers' Compensation Employers' Liability** to include:<br>(a) each accident<br>(b) Disease Policy Limits<br>(c) Disease each employee | Statutory Limits per occurrence<br><br>Each accident $1,000,000<br>Disease Policy Limits $1,000,000<br>Disease each employee$1,000,000 | **TOWN OF ADDISON, and Kimley-Horn and Associates, Inc. to be provided a *WAIVER OF SUBROGATION AND 30 DAY NOTICE OF CANCELLATION or*** material change in coverage. **Insurance company must be A-:VII rated or above.** |
| 2. **Commercial General (Public) Liability** to include coverage for:<br>a) Bodily Injury<br>b) Property damage<br>c) Independent Contractors<br>d) Personal Injury<br>e) Contractual Liability | Bodily Injury/Property Damage per occurrence $1,000,000, General Aggregate $2,000,000 Products/Completed Aggregate $2,000,000, Personal Advertising Injury per occurrence $1,000,000, Medical Expense 5,000 | **TOWN OF ADDISON, and Kimley-Horn and Associates, Inc. *to be listed as ADDITIONAL INSURED and provided 30 DAY NOTICE OF CANCELLATION* or material change in coverage. Insurance company must be A-:VII rated or above.** |
| 3. **Business Auto Liability** to include coverage for:<br>a) Owned/Leased vehicles<br>b) Non-owned vehicles<br>c) Hired vehicles | Combined Single Limit $1,000,000 per occurrence for bodily injury and property damage | **TOWN OF ADDISON, and Kimley-Horn and Associates, Inc. *to be listed as ADDITIONAL INSURED and provided 30 DAY NOTICE OF CANCELLATION* or material change in coverage. Insurance company must be A:VII- rated or above.** |
| 4. **Umbrella or Excess Liability Policy over Commercial General Liability and Automobile Liability limits of $1 million per occurrence** | Minimum $4 million per occurrence excess $1 million underlying per occurrence | **TOWN OF ADDISON, and Kimley-Horn and Associates, Inc. *to be listed as ADDITIONAL INSURED and provided 30 DAY NOTICE OF CANCELLATION* or material change in coverage. Insurance company must be A:VII- rated or above.** |

Certificate of Liability Insurance forms (together with the endorsements necessary to meet the requirements and instructions contained herein) may be **faxed** to the Purchasing Department: **972-450-7074 or emailed to: purchasing@addisontx.gov.** Questions regarding required insurance should be directed to the Purchasing Manager.

With respect to the foregoing insurance,

1. All liability policies shall contain no cross liability exclusions or insured versus insured restrictions applicable to the claims of the Town of Addison.

2. All insurance policies shall be endorsed to require the insurer to immediately notify the Town of Addison, Texas of any material change in the insurance coverage.

3. All insurance policies shall be endorsed to the effect that the Town of Addison, Texas will receive at least thirty (30) days' notice prior to cancellation or non-renewal of the insurance.

4. All insurance policies, which name the Town of Addison and Kimley-Horn and Associates, Inc. as an additional insured, must be endorsed to read as primary coverage regardless of the application of other insurance.

5. Insurance must be purchased from insurers that are financially acceptable to the Town of Addison and licensed to do business in the State of Texas.

All insurance must be written on forms filed with and approved by the Texas Department of Insurance. Upon request, Contractor shall furnish the Town of Addison with complete copies of all insurance policies certified to be true and correct by the insurance carrier.

This form must be signed and returned with your quotation. You are stating that you do have the required insurance and if selected to perform work for TOWN OF ADDISON, will provide the certificates of insurance (and endorsements) with the above requirements to TOWN OF ADDISON within 10 working days.

**A CONTRACT/PURCHASE ORDER WILL NOT BE ISSUED WITHOUT EVIDENCE AND APPROVAL OF INSURANCE.**

**AGREEMENT**

I agree to provide the above described insurance coverages within 10 working days if selected to perform work for TOWN OF ADDISON. I also agree to require any subcontractor(s) to maintain insurance coverage equal to that required by the Contractor. It is the responsibility of the Contractor to assure compliance with this provision. The Town accepts no responsibility arising from the conduct, or lack of conduct, of the Subcontractor.

**Project/Bid#**_____

**Company:**_____

**Printed Name:** _____

**Signature:**_____ **Date:** _____

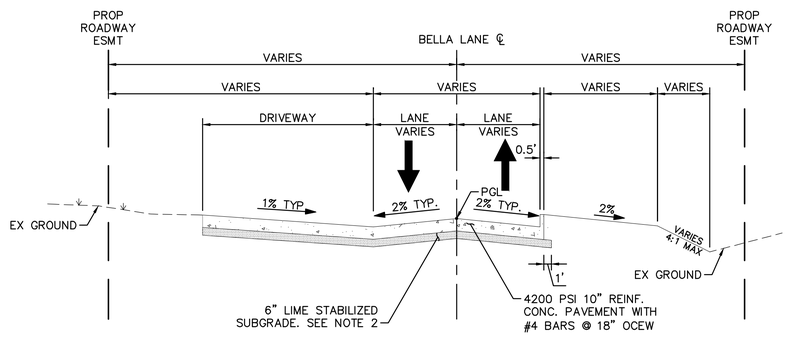


PROPOSED ROADWAY TYPICAL SECTION

## BELLA LANE CURB AND GUTTER SECTION

5 / C1.10

SCALE: H: 1"=10' V: 1"= 2'

BELLA LANE STA 10+76 TO 11+58

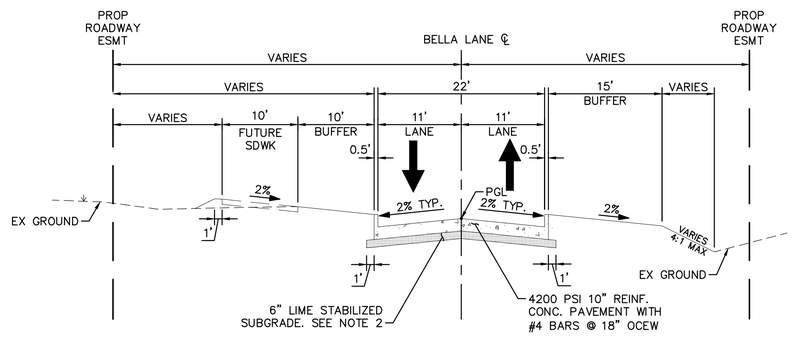


PROPOSED ROADWAY TYPICAL SECTION

## BELLA LANE CURB AND GUTTER SECTION

6 / C1.10

SCALE: H: 1"=10' V: 1"= 2'

BELLA LANE STA 11+58 TO END

NOTES:

1. MOISTURE CONDITION AND COMPACT TO A MINIMUM OF 94% OF ASTM D 698 (STANDARD PROCTOR DENSITY) AT 2% TO 6% ABOVE THE OPTIMUM MOISTURE CONTENT. EXTEND AT LEAST 1' OUTSIDE THE EDGE OF PROPOSED PAVEMENT. IN-SITU MATERIAL SHALL BE PROOF-ROLLED PER SECTION 4.2.3. (REFER TO GEOTECH REPORT PREPARED BY KLEINFELDER, INC. (REPORT 20212439.001A) DATED DECEMBER 2, 2020.)
2. 6" LIME-STABILIZED SUBGRADE (42 LBS/SY) COMPACTED TO A MINIMUM OF 95% ASTM D 698 (STANDARD PROCTOR DENSITY) AT 2% TO 5% ABOVE THE OPTIMUM MOISTURE CONTENT.
3. ALL PAVEMENT DIMENSIONS SHOWN ON THE PLANS ARE TO EDGE OF PAVEMENT UNLESS OTHERWISE NOTED.
4. TYPICAL SECTIONS ARE APPROXIMATE. REFER TO PLAN SHEETS FOR STATIONING AND LIMITS.
5. DIMENSIONS GIVEN FOR PARKWAY WIDTHS ARE TYPICAL, BUT MAY VARY IN LOCATIONS. REFER TO PLAN SHEETS FOR PARKWAY WIDTHS.
6. ALL DISTURBED AREAS TO RECEIVE HYDRAULIC MULCHING WITH 4" TOPSOIL. REFER TO EROSION CONTROL SHEETS.
7. REFER TO TOWN SPECIFICATIONS FOR ADDITIONAL REQUIREMENTS.
8. REFER TO GEOTECH REPORT NUMBER 20212439.001A PREPARED BY: KLEINFELDER, INC. DATED: 07-15-2021.
9. ALL WORK WITHIN FARMERS BRANCH SHALL BE COMPLETED IN ACCORDANCE WITH FARMERS BRANCH SPECIFICATIONS.

LISTING OF ABBREVIATIONS:

ROW = RIGHT-OF-WAY
℄ = CENTER LINE
PGL = PROFILE GRADE LINE

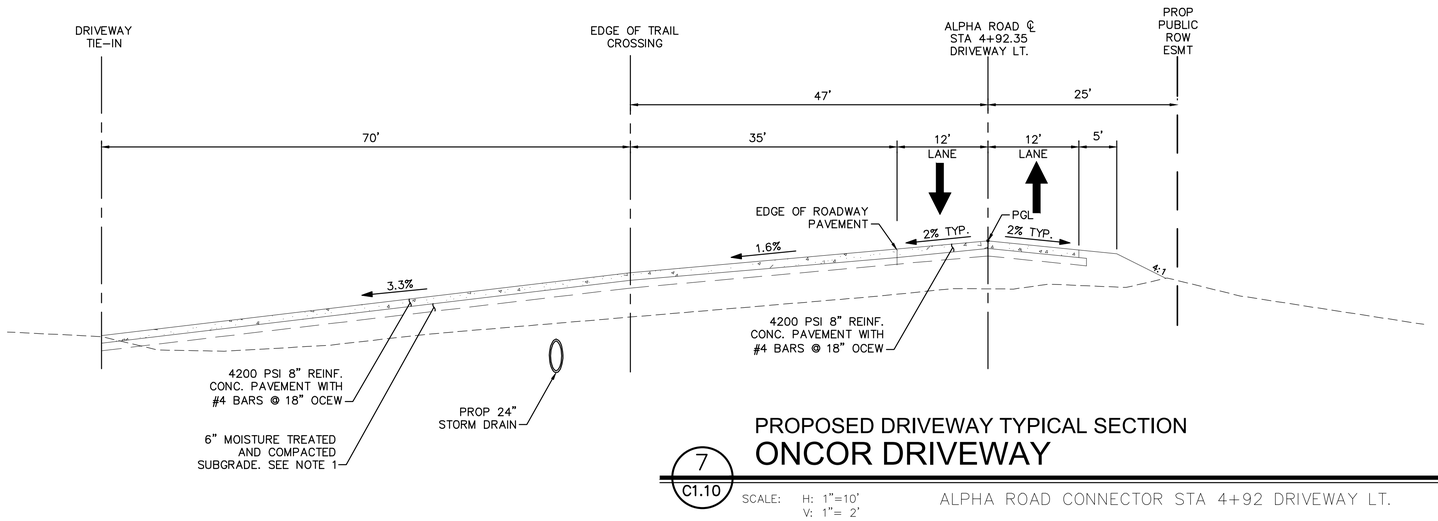


PROPOSED DRIVEWAY TYPICAL SECTION

## ONCOR DRIVEWAY

7 / C1.10

SCALE: H: 1"=10' V: 1"= 2'

ALPHA ROAD CONNECTOR STA 4+92 DRIVEWAY LT.

Know what's **below.** **Call** before you dig.

| No. | REVISIONS | DATE | BY |
|---|---|---|---|
| 1 | ADDENDUM #1 | 10/12/21 | CDS |

PROJECT NO. 2021-01C/ BID NO. 21-69

Kimley»Horn
2201 WEST ROYAL LANE, SUITE 275, IRVING, TX 75063
PHONE: 214-420-5600
WWW.KIMLEY-HORN.COM
© 2021 KIMLEY-HORN AND ASSOCIATES, INC.
TEXAS REGISTERED ENGINEERING FIRM #F-928

10/12/2021

STATE OF TEXAS
RYAN DELMOTTE
114242
LICENSED PROFESSIONAL ENGINEER

| | |
|---|---|
| KHA PROJECT | 063543031 |
| DATE | 10/12/2021 |
| SCALE | AS SHOWN |
| DESIGNED BY | RMD |
| DRAWN BY | CDS |
| CHECKED BY | LNA |

**TOWN OF ADDISON**
ALPHA ROAD CONN.
FROM FARMERS BRANCH CREEK TO ALPHA ROAD

TYPICAL SECTIONS
SHEET 2 OF 2

SHEET NUMBER
C1.10

Plotted By: Shettell, Cody October 11, 2021 - 11:38:53am K:\LAS_Civil\063543031 Addison Alpha Road Connect\CADD\Plan Sheets\Typical Sections.dwg
This document, together with the concepts and designs presented herein, as an instrument of service, is intended only for the specific purpose and client for which it was prepared. Reuse of and improper reliance on this document without written authorization and adaptation by Kimley-Horn and Associates, Inc. shall be without liability to Kimley-Horn and Associates, Inc.

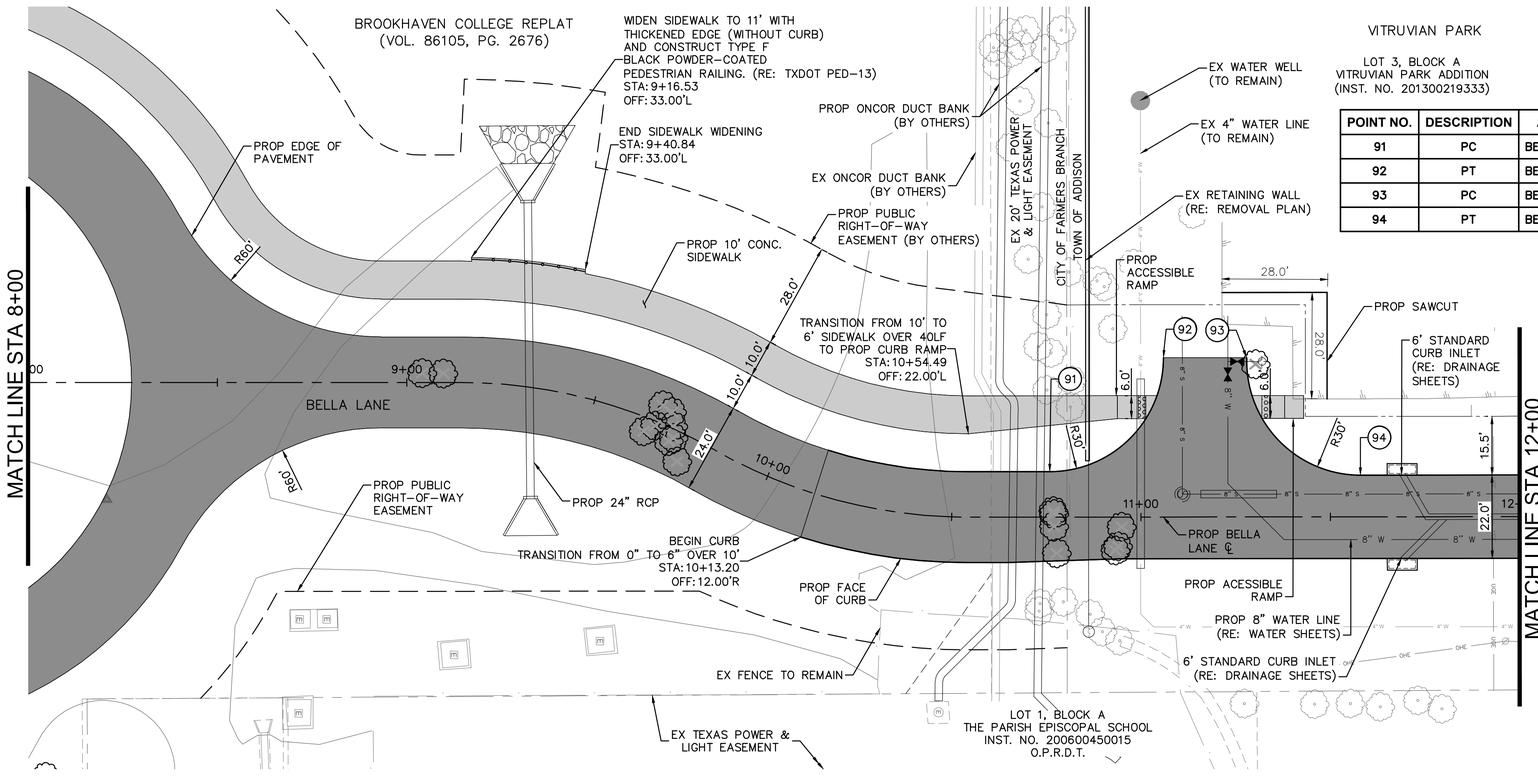


| POINT NO. | DESCRIPTION | ALIGNMENT | STATION | OFFSET | ELEV |
|---|---|---|---|---|---|
| 91 | PC | BELLA LANE EXT | 10+75.93 | 12.00' L | 562.13' |
| 92 | PT | BELLA LANE EXT | 11+05.93 | 42.00' L | 562.11' |
| 93 | PC | BELLA LANE EXT | 11+27.93 | 41.99' L | 562.11' |
| 94 | PT | BELLA LANE EXT | 11+57.93 | 11.00' L | 561.57' |

NORTH

GRAPHIC SCALE IN FEET
0 10 20 40

## LEGEND

- EX ROW
- EX EASEMENT
- PROP EASEMENT
- PROP STORM DRAIN
- PROP DITCH ℄
- PROP PAVEMENT
- PROP SIDEWALK
- PROP ASPHALT
- EX TREE
- EX TREE TO BE REMOVED

## NOTES

1. CONTRACTOR IS RESPONSIBLE FOR RELOCATION OF ANY SIGNS AND COORDINATION WITH THE CITY ON ANY NECESSARY MODIFICATIONS.
2. CONTRACTOR IS RESPONSIBLE FOR LOCATING ALL IRRIGATION FACILITIES WITHIN LOC.
3. THE EXISTENCE AND LOCATIONS OF ALL UNDERGROUND UTILITIES SHOWN ON THE DRAWINGS WERE OBTAINED FROM AVAILABLE RECORDS AND ARE APPROXIMATE. NEITHER THE OWNER NOR THE ENGINEER ASSUMES ANY RESPONSIBILITY FOR UTILITIES NOT SHOWN OR NOT IN THE LOCATION SHOWN. THE CONTRACTOR SHALL DETERMINE THE DEPTH AND LOCATION OF EXISTING UNDERGROUND UTILITIES PRIOR TO EXCAVATION AND SHALL BE REQUIRED TO TAKE ANY PRECAUTIONARY MEASURES TO PROTECT ALL LINES SHOWN AND/ OR ANY OTHER UNDERGROUND UTILITIES NOT OF RECORD OR NOT SHOWN ON THE PLANS. CONTRACTOR SHALL BE RESPONSIBLE FOR CONTACTING ALL FRANCHISE AND CITY UTILITIES PRIOR TO CONSTRUCTION.
4. ELEV ARE TOP OF PAVEMENT UNLESS OTHERWISE NOTED.

| | |
|---|---|
| EX | EXISTING |
| PROP | PROPOSED |
| STA | STATION |
| EL | ELEVATION |
| PI | POINT OF HORIZONTAL INFLECTION |
| PC | POINT OF HORIZONTAL CURVATURE |
| PT | POINT OF HORIZONTAL TANGENCY |
| PRC | POINT OF HORIZONTAL REVERSE CURVATURE |
| PVI | POINT OF VERTICAL INFLECTION |
| AD | ALGEBRAIC DIFFERENCE IN GRADES |
| VC | VERTICAL CURVE |
| BVCS/ EVCS | BEGIN/END VERTICAL CURVE STATION |
| BVCE/ EVCE | BEGIN/END VERTICAL CURVE ELEVATION |
| PGL | PROPOSED GRADE LINE |
| TCE | TEMPORARY CONSTRUCTION EASEMENT |
| TP | TOP OF PAVEMENT |

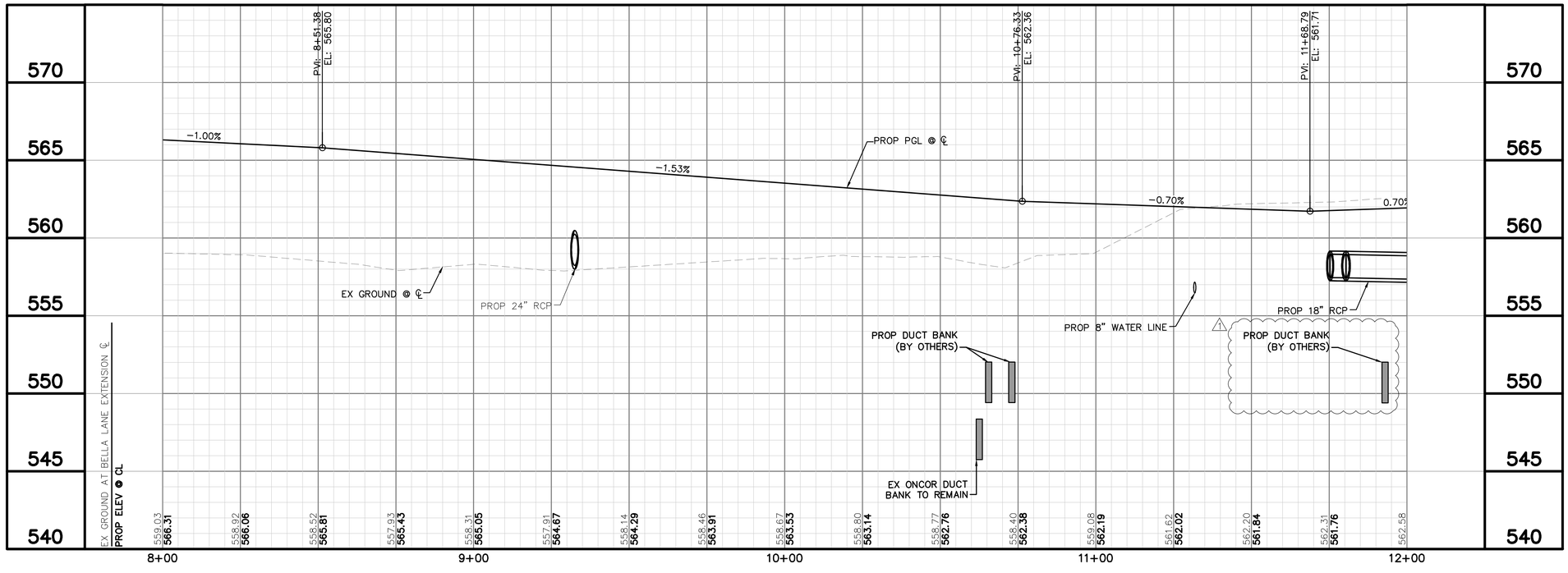


811 Know what's below. Call before you dig.

| No. | REVISIONS | DATE | BY |
|---|---|---|---|
| 1 | ADDENDUM #1 | 10/12/21 | CDS |

PROJECT NO. 2021-01C/ BID NO. 21-69

Kimley»Horn
2201 WEST ROYAL LANE, SUITE 275, IRVING, TX 75063
PHONE: 214-420-5600
WWW.KIMLEY-HORN.COM
© 2021 KIMLEY-HORN AND ASSOCIATES, INC.
TEXAS REGISTERED ENGINEERING FIRM #F-928

10/12/2021

STATE OF TEXAS
RYAN DELMOTTE
114242
LICENSED
PROFESSIONAL ENGINEER

| KHA PROJECT 063543031 | | |
|---|---|---|
| DATE | 10/12/2021 | |
| SCALE | AS SHOWN | |
| DESIGNED BY | RMD | |
| DRAWN BY | CDS | |
| CHECKED BY | LNA | |

# TOWN OF ADDISON
## ALPHA ROAD CONN. FROM FARMERS BRANCH CREEK TO ALPHA ROAD

# BELLA LANE EXTENSION
## PLAN AND PROFILE STA 8+00 TO STA 12+00

SHEET NUMBER
C3.07

Plotted By-Shettigh, Cody October 11, 2021 11:36:39am K:\NAC-Civil\063543031-Addison-Alpha Road Connector\CAD\Plan-Street\Paving Plan&Profile.dwg
This document, together with the concepts and designs presented herein, as an instrument of service, is intended only for the specific purpose and client for which it was prepared. Reuse of and improper reliance on this document without written authorization and adaptation by Kimley-Horn and Associates, Inc. shall be without liability to Kimley-Horn and Associates, Inc.

Plotted By: Strahan, Cody October 11, 2021 11:39:57am K:\IAC_Dal\063543031 Addison Alpha Road Connector\C400\Plan Sheet\Paving Plan&Profile.dgn
This document, together with the concepts and designs presented herein, as an instrument of service, is intended only for the specific purpose and client for which it was prepared. Reuse of and improper reliance on this document without written authorization and adaptation by Kimley-Horn and Associates, Inc. shall be without liability to Kimley-Horn and Associates, Inc.

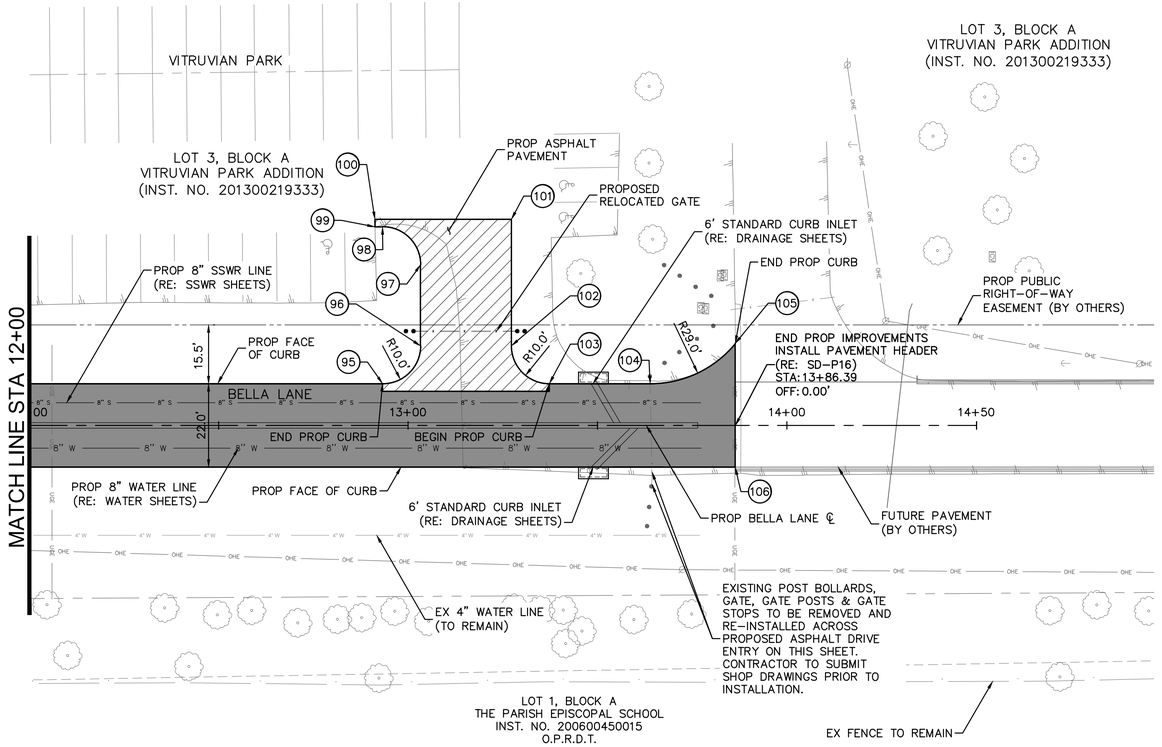


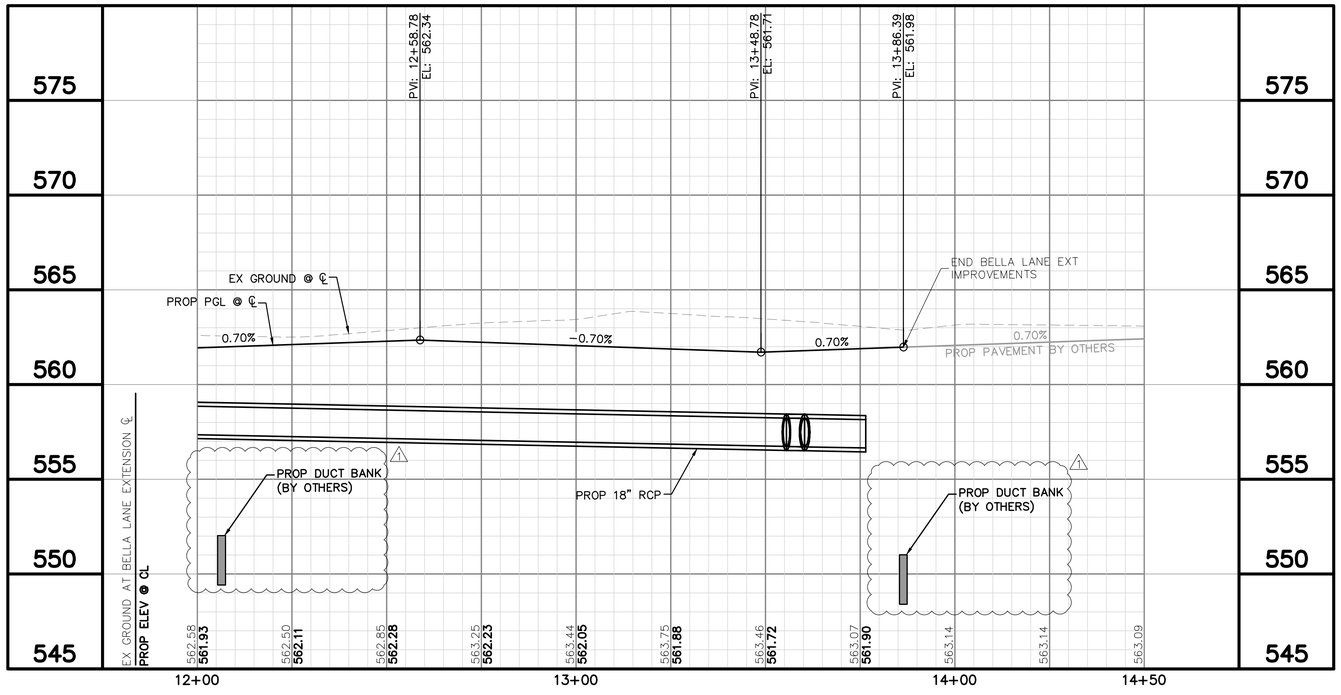


| POINT NO. | DESCRIPTION | ALIGNMENT | STATION | OFFSET | ELEV |
|---|---|---|---|---|---|
| 95 | PC | BELLA LANE EXT | 12+93.27 | 11.00' L | 561.88' |
| 96 | PT | BELLA LANE EXT | 13+03.27 | 21.00' L | 562.82' |
| 97 | PC | BELLA LANE EXT | 13+03.27 | 42.37' L | 564.46' |
| 98 | PT | BELLA LANE EXT | 12+93.27 | 52.37' L | 564.54' |
| 99 | PI | BELLA LANE EXT | 12+91.27 | 52.37' L | 564.55' |
| 100 | PI | BELLA LANE EXT | 12+91.27 | 54.37' L | 564.57' |
| 101 | PI | BELLA LANE EXT | 13+27.27 | 54.37' L | 564.61' |
| 102 | PC | BELLA LANE EXT | 13+27.27 | 21.00' L | 562.54' |
| 103 | PT | BELLA LANE EXT | 13+37.27 | 11.00' L | 561.57' |
| 104 | PC | BELLA LANE EXT | 13+63.89 | 10.99' L | 561.60' |
| 105 | PI | BELLA LANE EXT | 13+86.29 | 21.55' L | 561.54' |
| 106 | PI | BELLA LANE EXT | 13+86.30 | 10.99' R | 561.75' |

NORTH

GRAPHIC SCALE IN FEET
0 10 20 40

## LEGEND

- EX ROW
- EX EASEMENT
- PROP EASEMENT
- PROP STORM DRAIN
- PROP DITCH ℄
- PROP PAVEMENT
- PROP SIDEWALK
- PROP ASPHALT
- EX TREE
- EX TREE TO BE REMOVED

## NOTES

1. CONTRACTOR IS RESPONSIBLE FOR RELOCATION OF ANY SIGNS AND COORDINATION WITH THE CITY ON ANY NECESSARY MODIFICATIONS.
2. CONTRACTOR IS RESPONSIBLE FOR LOCATING ALL IRRIGATION FACILITIES WITHIN LOC.
3. THE EXISTENCE AND LOCATIONS OF ALL UNDERGROUND UTILITIES SHOWN ON THE DRAWINGS WERE OBTAINED FROM AVAILABLE RECORDS AND ARE APPROXIMATE. NEITHER THE OWNER NOR THE ENGINEER ASSUMES ANY RESPONSIBILITY FOR UTILITIES NOT SHOWN OR NOT IN THE LOCATION SHOWN. THE CONTRACTOR SHALL DETERMINE THE DEPTH AND LOCATION OF EXISTING UNDERGROUND UTILITIES PRIOR TO EXCAVATION AND SHALL BE REQUIRED TO TAKE ANY PRECAUTIONARY MEASURES TO PROTECT ALL LINES SHOWN AND/ OR ANY OTHER UNDERGROUND UTILITIES NOT OF RECORD OR NOT SHOWN ON THE PLANS. CONTRACTOR SHALL BE RESPONSIBLE FOR CONTACTING ALL FRANCHISE AND CITY UTILITIES PRIOR TO CONSTRUCTION.
4. ELEV ARE TOP OF PAVEMENT UNLESS OTHERWISE NOTED.

| | |
|---|---|
| EX | EXISTING |
| PROP | PROPOSED |
| STA | STATION |
| EL | ELEVATION |
| PI | POINT OF HORIZONTAL INFLECTION |
| PC | POINT OF HORIZONTAL CURVATURE |
| PT | POINT OF HORIZONTAL TANGENCY |
| PRC | POINT OF HORIZONTAL REVERSE CURVATURE |
| PVI | POINT OF VERTICAL INFLECTION |
| AD | ALGEBRAIC DIFFERENCE IN GRADES |
| VC | VERTICAL CURVE |
| BVCS/ EVCS | BEGIN/END VERTICAL CURVE STATION |
| BVCE/ EVCE | BEGIN/END VERTICAL CURVE ELEVATION |
| PGL | PROPOSED GRADE LINE |
| TCE | TEMPORARY CONSTRUCTION EASEMENT |
| TP | TOP OF PAVEMENT |

Know what's **below.**
**Call** before you dig.

| No. | REVISIONS | DATE | BY |
|---|---|---|---|
| 1 | ADDENDUM #1 | 10/12/21 | CDS |

PROJECT NO. 2021-01C/ BID NO. 21-69

Kimley»Horn
2201 WEST ROYAL LANE, SUITE 275, IRVING, TX 75063
PHONE: 214-420-5600
WWW.KIMLEY-HORN.COM
© 2021 KIMLEY-HORN AND ASSOCIATES, INC.
TEXAS REGISTERED ENGINEERING FIRM #F-928

10/12/2021
STATE OF TEXAS
RYAN DELMOTTE
114242
LICENSED
PROFESSIONAL ENGINEER

KHA PROJECT 063543031
DATE 10/12/2021
SCALE AS SHOWN
DESIGNED BY RMD
DRAWN BY CDS
CHECKED BY LNA

# TOWN OF ADDISON
ALPHA ROAD CONN.
FROM FARMERS BRANCH CREEK TO ALPHA ROAD

# BELLA LANE EXTENSION
PLAN AND PROFILE
STA 12+00 TO END

SHEET NUMBER
C3.08

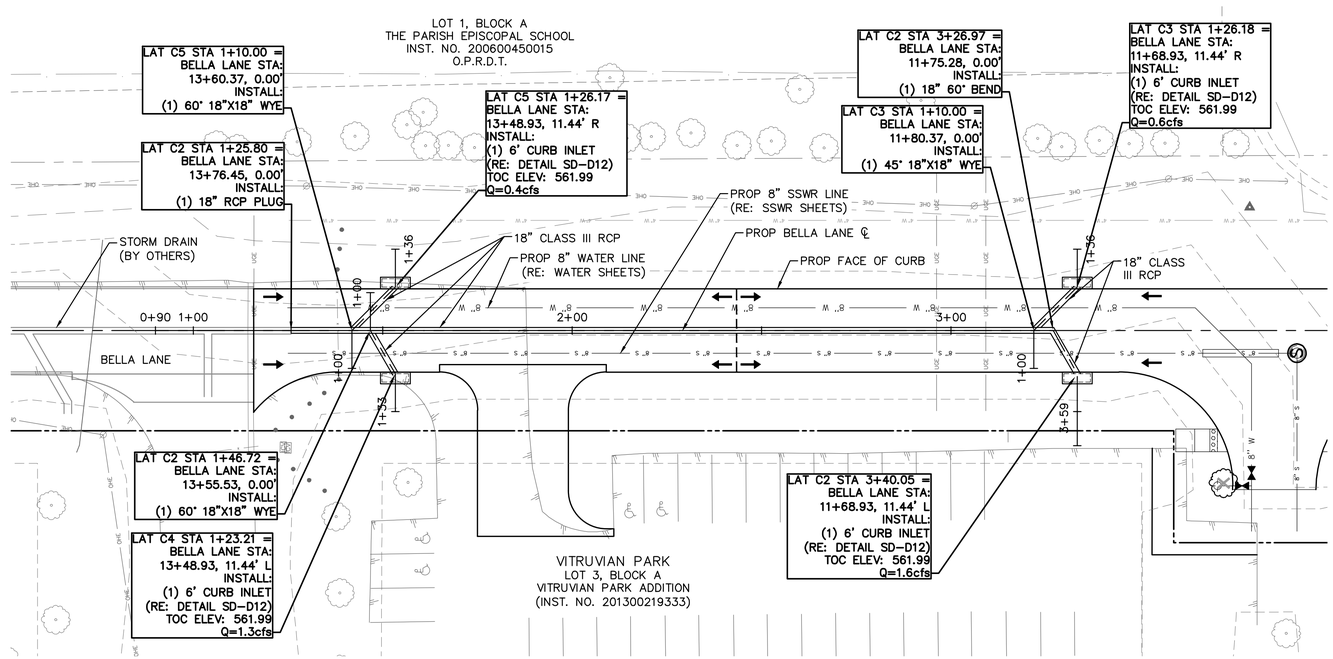


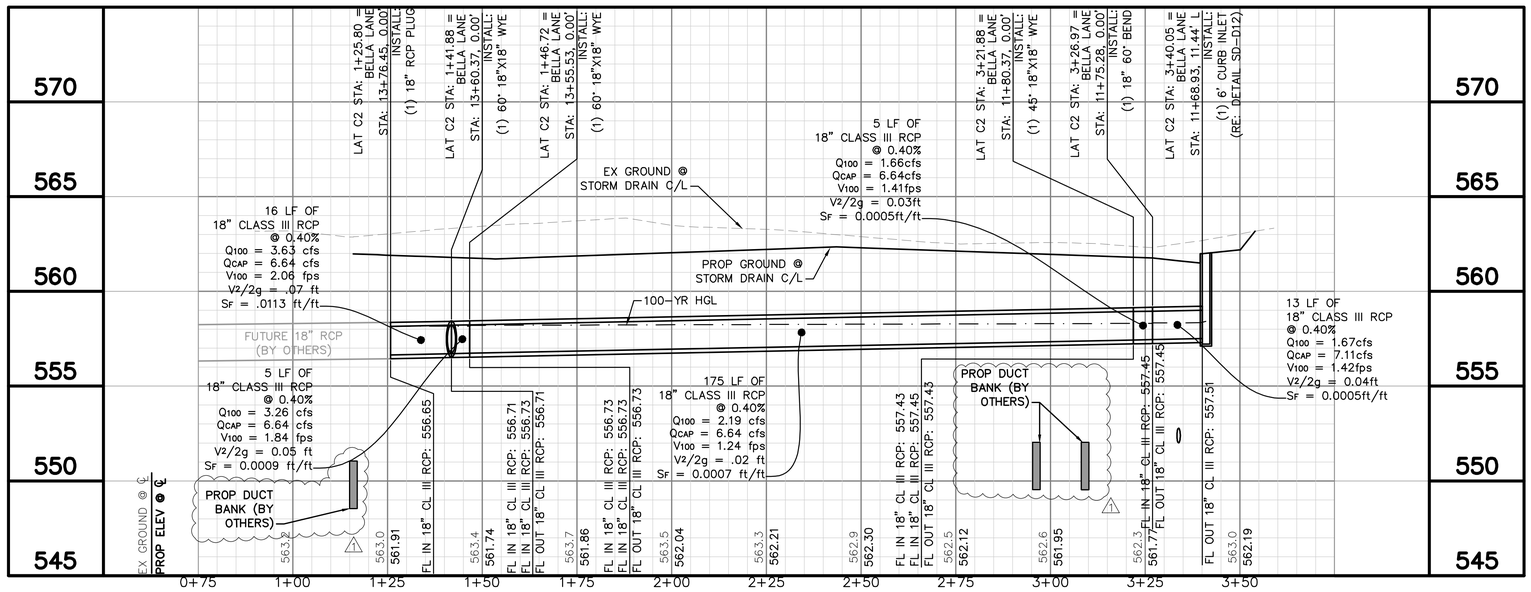


Know what's **below.**
**Call** before you dig.

| No. | REVISIONS | DATE | BY |
|---|---|---|---|
| 1 | ADDENDUM #1 | 10/12/21 | CDS |

PROJECT NO. 2021-01C/ BID NO. 21-69


Kimley»Horn
2201 WEST ROYAL LANE, SUITE 275, IRVING, TX 75063
PHONE: 214-420-5600
WWW.KIMLEY-HORN.COM


© 2021 KIMLEY-HORN AND ASSOCIATES, INC.
TEXAS REGISTERED ENGINEERING FIRM #F-928


10/12/2021

STATE OF TEXAS
RYAN DELMOTTE
114242
LICENSED
PROFESSIONAL ENGINEER

KHA PROJECT 063543031

| DATE | SCALE | DESIGNED BY | DRAWN BY | CHECKED BY |
|---|---|---|---|---|
| 10/12/2021 | AS SHOWN | RMD | CDS | LNA |

# TOWN OF ADDISON
## ALPHA ROAD CONN. FROM FARMERS BRANCH CREEK TO ALPHA ROAD

## DRAINAGE SYSTEM C

SHEET NUMBER
C4.13


Plotted By: Shettell, Cody October 11, 2021 - 11:40:01am K:\VAC_Civil\063543031 Addison Alpha Road Connect\CADD\PlanSheets\Drainage Plan&Profile.dwg
This document, together with the concepts and designs presented herein, as an instrument of service, is intended only for the specific purpose and client for which it was prepared. Reuse of and improper reliance on this document without written authorization and adaptation by Kimley-Horn and Associates, Inc. shall be without liability to Kimley-Horn and Associates, Inc.

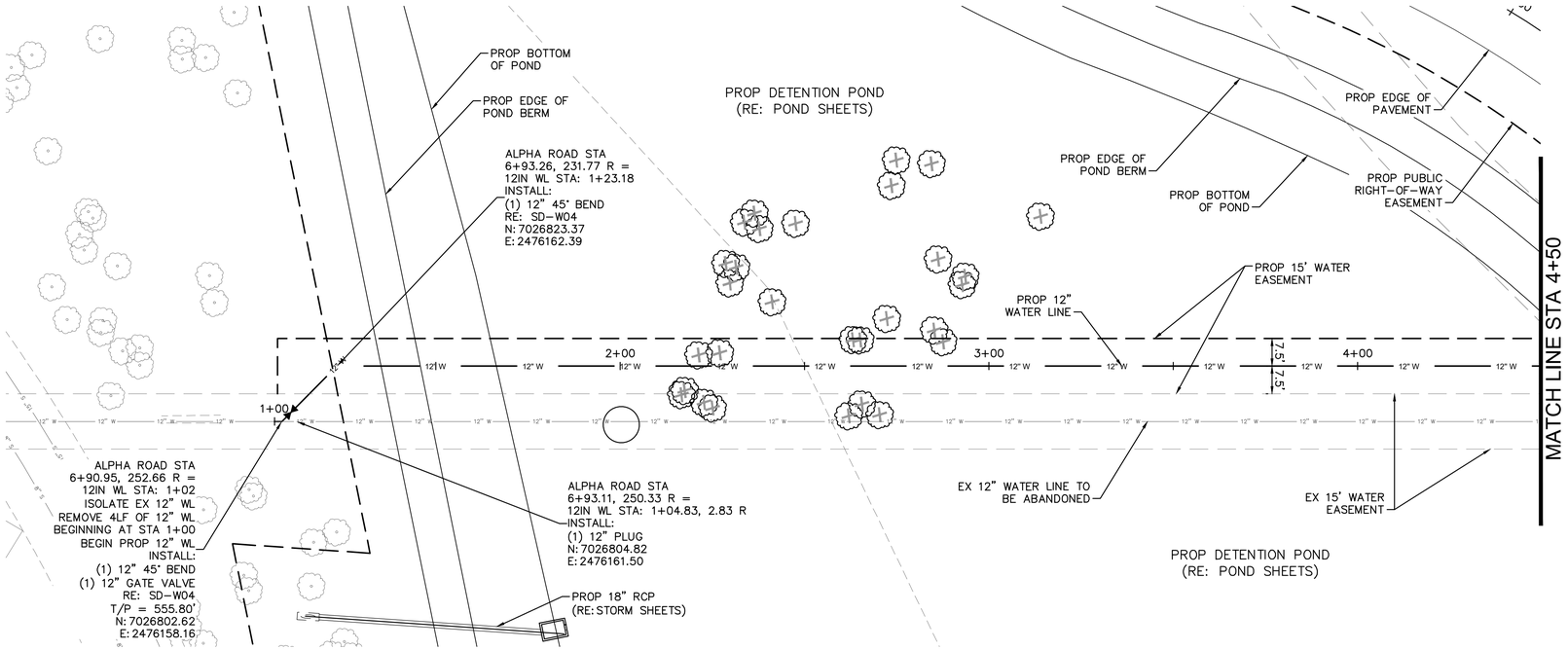


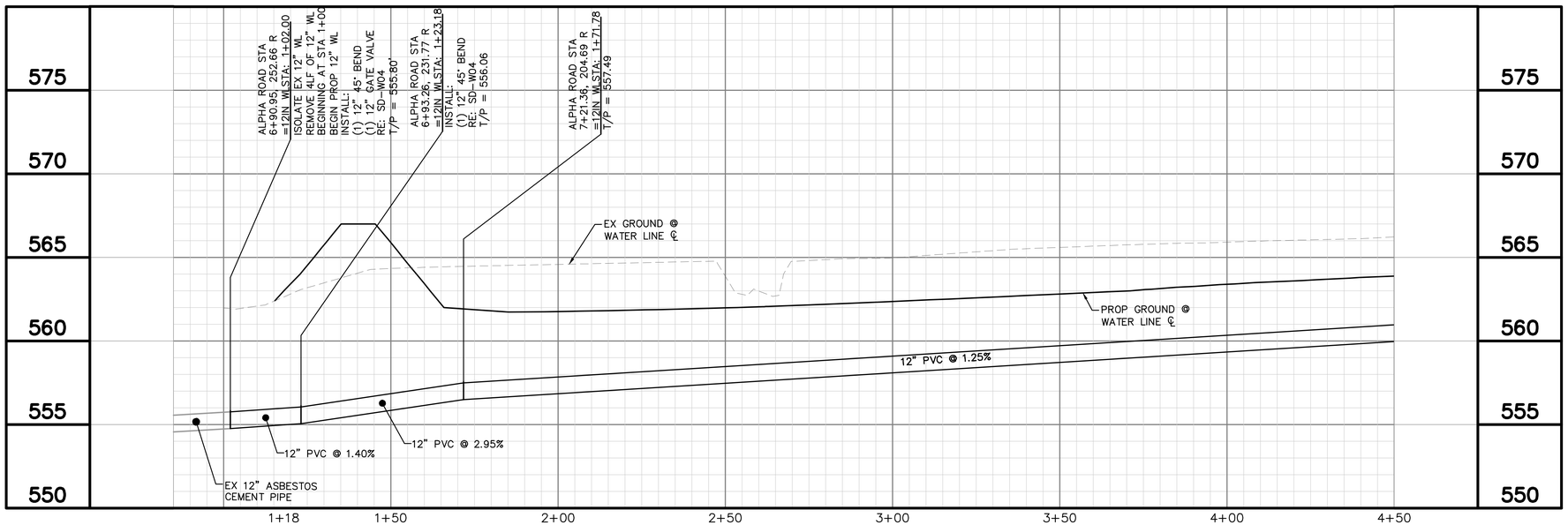


GRAPHIC SCALE IN FEET
0 10 20 40

NORTH

## UTILITY LEGEND

- PROPERTY LINE
- PROP WATER LINE
- PROP SANITARY SEWER LINE
- PROP WATER VALVE
- PROP FIRE HYDRANT
- PROP SANITARY SEWER MANHOLE
- EX GAS LINE
- EX UNDERGROUND TELEPHONE
- EX UNDERGROUND ELECTRIC
- EX OVERHEAD POWER LINE
- EX WATER LINE
- EX SANITARY SEWER LINE
- EX STORM SEWER LINE
- EX POWER POLE
- EX FIRE HYDRANT
- EX WATER VALVE
- EX SANITARY SEWER MANHOLE

WATER GENERAL NOTES:

1. FIRE HYDRANTS, VALVES, FITTINGS, ETC. SHOWN AS A GRAPHICAL REPRESENTATION ONLY. CONTRACTOR TO LOCATE AND CONSTRUCT THESE IMPROVEMENTS BASED ON THE CURRENT TOWN/CITY/JURISDICTIONAL DESIGN STANDARDS AND DETAILS. CONTRACTOR TO NOTIFY ENGINEER IF ANY DISCREPANCIES ARE DISCOVERED PRIOR TO BEGINNING CONSTRUCTION.
2. CONTRACTOR TO FIELD VERIFY LOCATION OF EXISTING UTILITIES PRIOR TO CONSTRUCTION.
3. FIRE HYDRANT ASSEMBLY INCLUDES ALL FITTINGS, TEES AND VALVES.
4. VALVE DISTANCES AND LOCATION AND APPROXIMATE AND ARE PROVIDED TO ASSIST DEWATERING VOLUME ESTIMATES. NO ADDITIONAL PAYMENT WILL BE MADE IF FIELD CONDITION VARY.
5. TOWN OF ADDISON/CITY OF FARMERS BRANCH STAFF WILL OPERATE ALL EXISTING VALVES.

!!WARNING!!

EXISTING UTILITIES IN THE AREA. CONTRACTOR SHALL FIELD VERIFY THE LOCATION OF ALL EXISTING UTILITIES WITH THE PROVIDER PRIOR TO START OF CONSTRUCTION AND SHALL IMMEDIATELY NOTIFY THE ENGINEER OF ANY CONFLICTS DISCOVERED. CONTRACTOR IS RESPONSIBLE FOR COORDINATING UTILITY RELOCATION WHERE NECESSARY AND PROTECTING EXISTING UTILITIES (SHOWN OR NOT SHOWN). IF ANY EXISTING UTILITIES ARE DAMAGED, THE CONTRACTOR SHALL REPLACE THEM AT THEIR OWN EXPENSE.

811 Know what's **below.** **Call** before you dig.

| No. | REVISIONS | DATE | BY |
|---|---|---|---|
| 1 | ADDENDUM #1 | 10/12/21 | CDS |

PROJECT NO. 2021-01C/ BID NO. 21-69

Kimley»Horn
2201 WEST ROYAL LANE, SUITE 275, IRVING, TX 75063
PHONE: 214-420-5600
WWW.KIMLEY-HORN.COM
© 2021 KIMLEY-HORN AND ASSOCIATES, INC.
TEXAS REGISTERED ENGINEERING FIRM #F-928

10/12/2021
STATE OF TEXAS
RYAN DELMOTTE
114242
LICENSED PROFESSIONAL ENGINEER

KHA PROJECT 063543031

| DATE | 10/12/2021 |
|---|---|
| SCALE | AS SHOWN |
| DESIGNED BY | RMD |
| DRAWN BY | CDS |
| CHECKED BY | LNA |

**TOWN OF ADDISON**
ALPHA ROAD CONN.
FROM FARMERS BRANCH CREEK TO ALPHA ROAD

# WATER LINE
PLAN & PROFILE
ALPHA ROAD CONNECTOR
BEGIN TO STA 4+50

SHEET NUMBER
C7.01

Plotted By: Shettigh, Cody October 11, 2021 11:41:47am K:\IVAC_Civil\063543031 Addison Alpha Road Connect\CAD\PlanSheet\Water Plan.dgn
This document, together with the concepts and designs presented herein, as an instrument of service, is intended only for the specific purpose and client for which it was prepared. Reuse of and improper reliance on this document without written authorization and adaptation by Kimley-Horn and Associates, Inc. shall be without liability to Kimley-Horn and Associates, Inc.

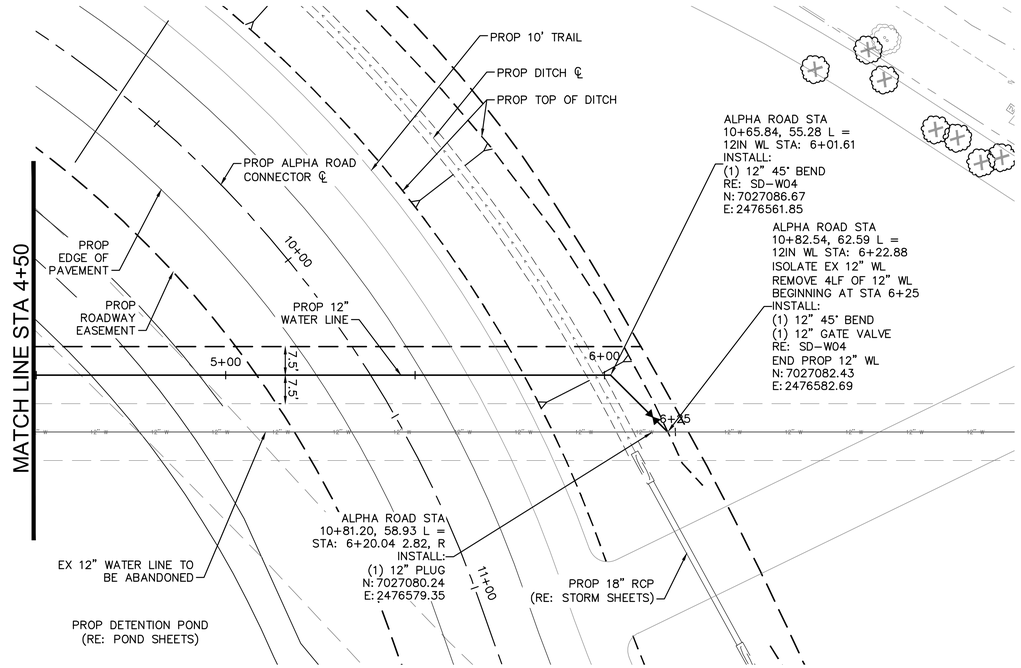


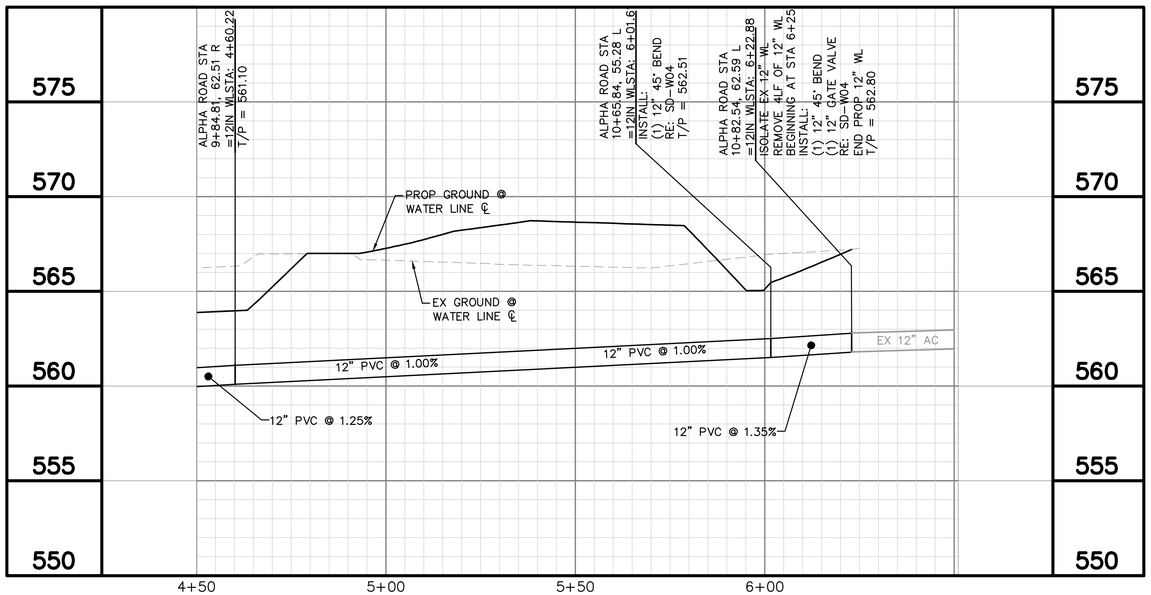


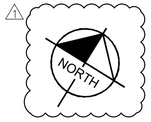


GRAPHIC SCALE IN FEET
0 10 20 40

## UTILITY LEGEND

- PROPERTY LINE
- PROP WATER LINE
- PROP SANITARY SEWER LINE
- PROP WATER VALVE
- PROP FIRE HYDRANT
- PROP SANITARY SEWER MANHOLE
- EX GAS LINE
- EX UNDERGROUND TELEPHONE
- EX UNDERGROUND ELECTRIC
- EX OVERHEAD POWER LINE
- EX WATER LINE
- EX SANITARY SEWER LINE
- EX STORM SEWER LINE
- EX POWER POLE
- EX FIRE HYDRANT
- EX WATER VALVE
- EX SANITARY SEWER MANHOLE

WATER GENERAL NOTES:

1. FIRE HYDRANTS, VALVES, FITTINGS, ETC. SHOWN AS A GRAPHICAL REPRESENTATION ONLY. CONTRACTOR TO LOCATE AND CONSTRUCT THESE IMPROVEMENTS BASED ON THE CURRENT TOWN/CITY/JURISDICTIONAL DESIGN STANDARDS AND DETAILS. CONTRACTOR TO NOTIFY ENGINEER IF ANY DISCREPANCIES ARE DISCOVERED PRIOR TO BEGINNING CONSTRUCTION.
2. CONTRACTOR TO FIELD VERIFY LOCATION OF EXISTING UTILITIES PRIOR TO CONSTRUCTION.
3. FIRE HYDRANT ASSEMBLY INCLUDES ALL FITTINGS, TEES AND VALVES.
4. VALVE DISTANCES AND LOCATION AND APPROXIMATE AND ARE PROVIDED TO ASSIST DEWATERING VOLUME ESTIMATES. NO ADDITIONAL PAYMENT WILL BE MADE IF FIELD CONDITION VARY.
5. TOWN OF ADDISON/CITY OF FARMERS BRANCH STAFF WILL OPERATE ALL EXISTING VALVES.

!!WARNING!!

EXISTING UTILITIES IN THE AREA. CONTRACTOR SHALL FIELD VERIFY THE LOCATION OF ALL EXISTING UTILITIES WITH THE PROVIDER PRIOR TO START OF CONSTRUCTION AND SHALL IMMEDIATELY NOTIFY THE ENGINEER OF ANY CONFLICTS DISCOVERED. CONTRACTOR IS RESPONSIBLE FOR COORDINATING UTILITY RELOCATION WHERE NECESSARY AND PROTECTING EXISTING UTILITIES (SHOWN OR NOT SHOWN). IF ANY EXISTING UTILITIES ARE DAMAGED, THE CONTRACTOR SHALL REPLACE THEM AT THEIR OWN EXPENSE.

811 Know what's **below.** **Call** before you dig.

| No. | REVISIONS | DATE | BY |
|---|---|---|---|
| 1 | ADDENDUM #1 | 10/12/21 | CDS |

PROJECT NO. 2021-01C/ BID NO. 21-69

Kimley»Horn
2201 WEST ROYAL LANE, SUITE 275, IRVING, TX 75063
PHONE: 214-420-5600
WWW.KIMLEY-HORN.COM
© 2021 KIMLEY-HORN AND ASSOCIATES, INC.
TEXAS REGISTERED ENGINEERING FIRM #F-928

10/12/2021

STATE OF TEXAS
RYAN DELMOTTE
114242
LICENSED
PROFESSIONAL ENGINEER

KHA PROJECT 063543031

| DATE | 10/12/21 |
|---|---|
| SCALE | AS SHOWN |
| DESIGNED BY | RMD |
| DRAWN BY | CDS |
| CHECKED BY | LNA |

# TOWN OF ADDISON
ALPHA ROAD CONN.
FROM FARMERS BRANCH
CREEK TO ALPHA ROAD

## WATER LINE
PLAN & PROFILE
ALPHA ROAD CONNECTOR
STA 4+50 TO END

SHEET NUMBER
C7.02

Plotted By: Shettigh, Cody October 11, 2021 11:41:52am K:\VAC_Civil\063543031 Addison Alpha Road Connect\CAD\PlanSheet\Water Plan.dgn
This document, together with the concepts and designs presented herein, as an instrument of service, is intended only for the specific purpose and client for which it was prepared. Reuse of and improper reliance on this document without written authorization and adaptation by Kimley-Horn and Associates, Inc. shall be without liability to Kimley-Horn and Associates, Inc.

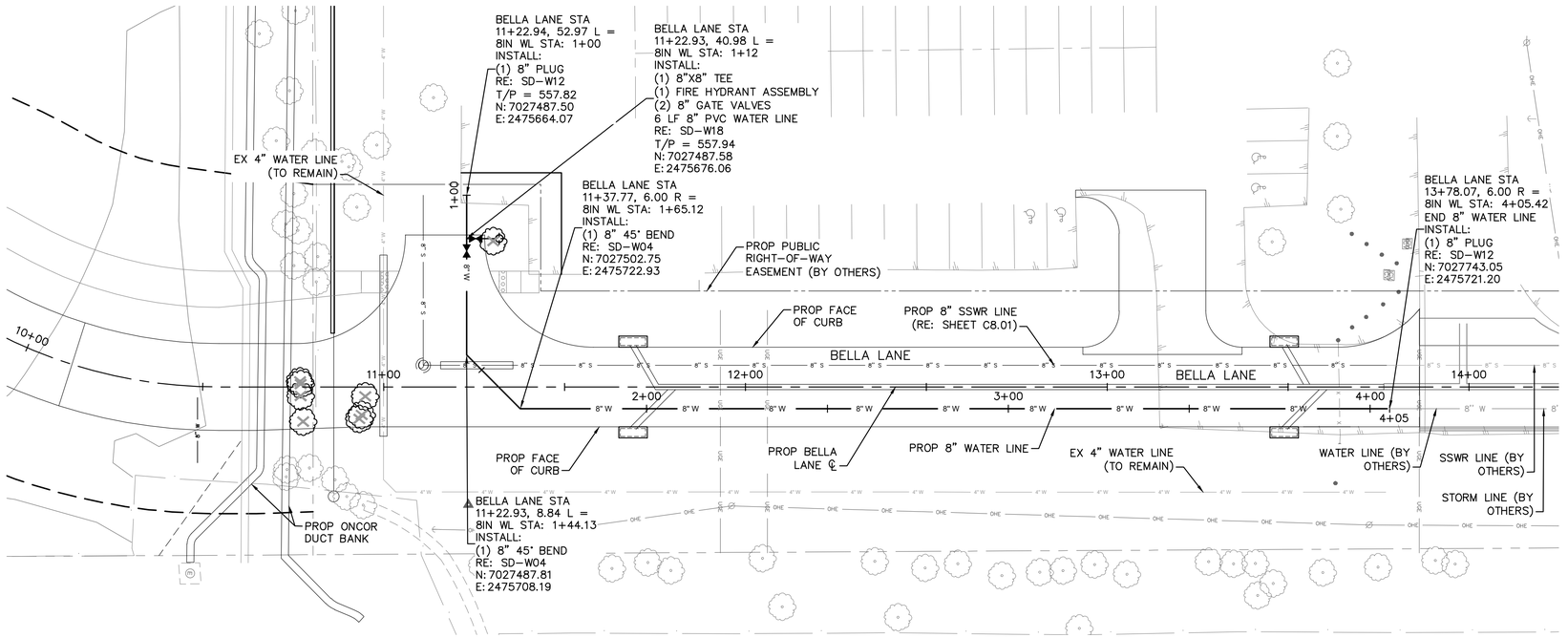


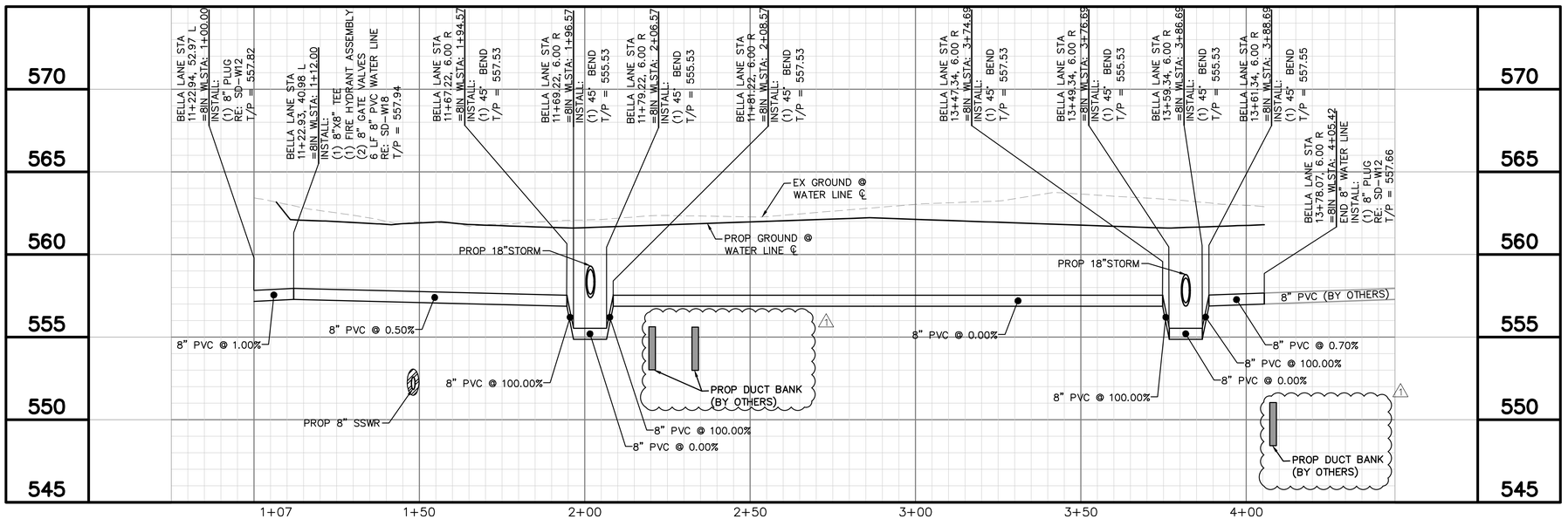


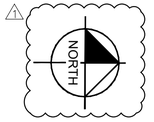


GRAPHIC SCALE IN FEET
0 10 20 40

## UTILITY LEGEND

- PROPERTY LINE
- PROP WATER LINE
- PROP SANITARY SEWER LINE
- PROP WATER VALVE
- PROP FIRE HYDRANT
- PROP SANITARY SEWER MANHOLE
- EX GAS LINE
- EX UNDERGROUND TELEPHONE
- EX UNDERGROUND ELECTRIC
- EX OVERHEAD POWER LINE
- EX WATER LINE
- EX SANITARY SEWER LINE
- EX STORM SEWER LINE
- EX POWER POLE
- EX FIRE HYDRANT
- EX WATER VALVE
- EX SANITARY SEWER MANHOLE

WATER GENERAL NOTES:

1. FIRE HYDRANTS, VALVES, FITTINGS, ETC. SHOWN AS A GRAPHICAL REPRESENTATION ONLY. CONTRACTOR TO LOCATE AND CONSTRUCT THESE IMPROVEMENTS BASED ON THE CURRENT TOWN/CITY/JURISDICTIONAL DESIGN STANDARDS AND DETAILS. CONTRACTOR TO NOTIFY ENGINEER IF ANY DISCREPANCIES ARE DISCOVERED PRIOR TO BEGINNING CONSTRUCTION.
2. CONTRACTOR TO FIELD VERIFY LOCATION OF EXISTING UTILITIES PRIOR TO CONSTRUCTION.
3. FIRE HYDRANT ASSEMBLY INCLUDES ALL FITTINGS, TEES AND VALVES.
4. VALVE DISTANCES AND LOCATION AND APPROXIMATE AND ARE PROVIDED TO ASSIST DEWATERING VOLUME ESTIMATES. NO ADDITIONAL PAYMENT WILL BE MADE IF FIELD CONDITION VARY.
5. TOWN OF ADDISON/CITY OF FARMERS BRANCH STAFF WILL OPERATE ALL EXISTING VALVES.

!!WARNING!!

EXISTING UTILITIES IN THE AREA. CONTRACTOR SHALL FIELD VERIFY THE LOCATION OF ALL EXISTING UTILITIES WITH THE PROVIDER PRIOR TO START OF CONSTRUCTION AND SHALL IMMEDIATELY NOTIFY THE ENGINEER OF ANY CONFLICTS DISCOVERED. CONTRACTOR IS RESPONSIBLE FOR COORDINATING UTILITY RELOCATION WHERE NECESSARY AND PROTECTING EXISTING UTILITIES (SHOWN OR NOT SHOWN). IF ANY EXISTING UTILITIES ARE DAMAGED, THE CONTRACTOR SHALL REPLACE THEM AT THEIR OWN EXPENSE.

811 Know what's **below.** **Call** before you dig.

| No. | REVISIONS | DATE | BY |
|---|---|---|---|
| 1 | ADDENDUM #1 | 10/12/21 | CDS |

PROJECT NO. 2021-01C/ BID NO. 21-69

Kimley»Horn
2201 WEST ROYAL LANE, SUITE 275, IRVING, TX 75063
PHONE: 214-420-5600
WWW.KIMLEY-HORN.COM
© 2021 KIMLEY-HORN AND ASSOCIATES, INC.
TEXAS REGISTERED ENGINEERING FIRM #F-928

10/12/2021
STATE OF TEXAS
RYAN DELMOTTE
114242
LICENSED
PROFESSIONAL ENGINEER

KHA PROJECT 063543031
DATE 10/12/2021
SCALE AS SHOWN
DESIGNED BY RMD
DRAWN BY CDS
CHECKED BY LNA

# TOWN OF ADDISON
ALPHA ROAD CONN.
FROM FARMERS BRANCH
CREEK TO ALPHA ROAD

## WATER LINE
PLAN & PROFILE
BELLA LANE

SHEET NUMBER
C7.03

Plotted By: Shettcliffe, Cody October 11, 2021 11:41:58am K:\ALA_Civil\063543031 Addison Alpha Road Connect\CAD\PlanSheets\Water Plan.dwg
This document, together with the concepts and designs presented herein, as an instrument of service, is intended only for the specific purpose and client for which it was prepared. Reuse of and improper reliance on this document without written authorization and adaptation by Kimley-Horn and Associates, Inc. shall be without liability to Kimley-Horn and Associates, Inc.

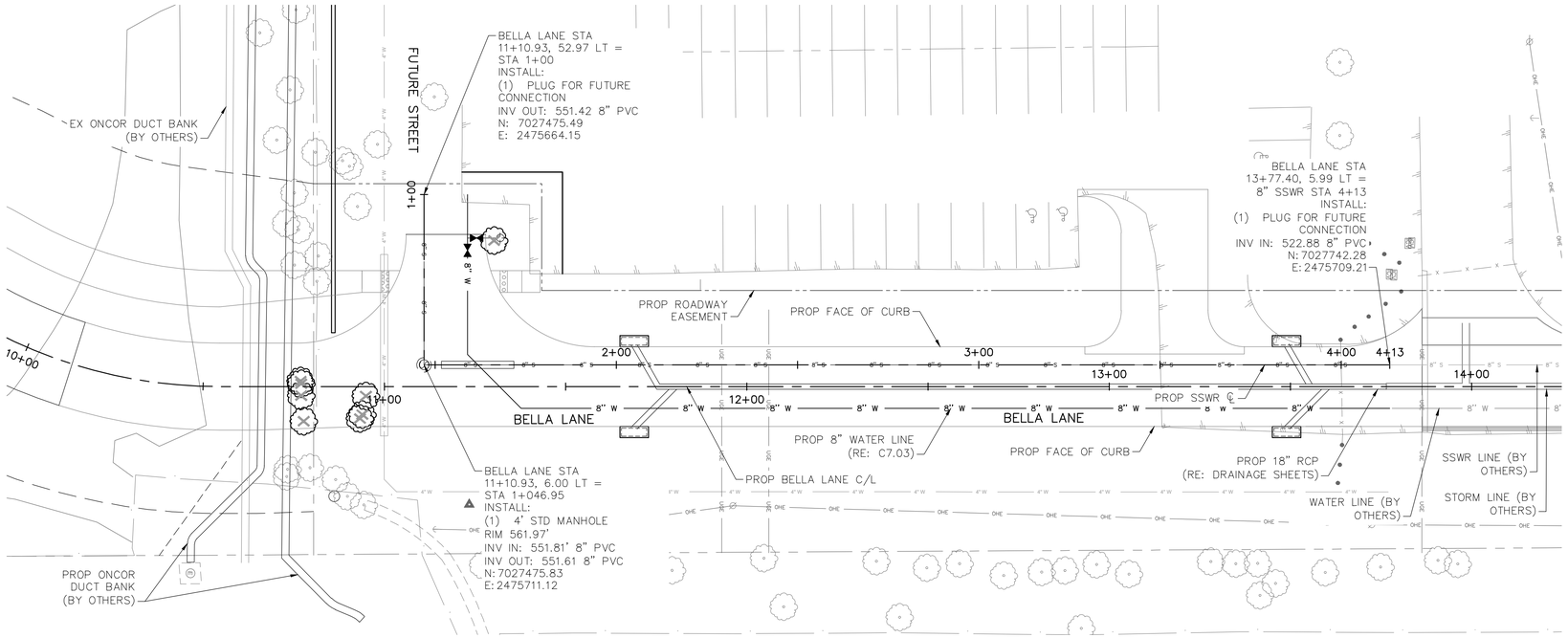


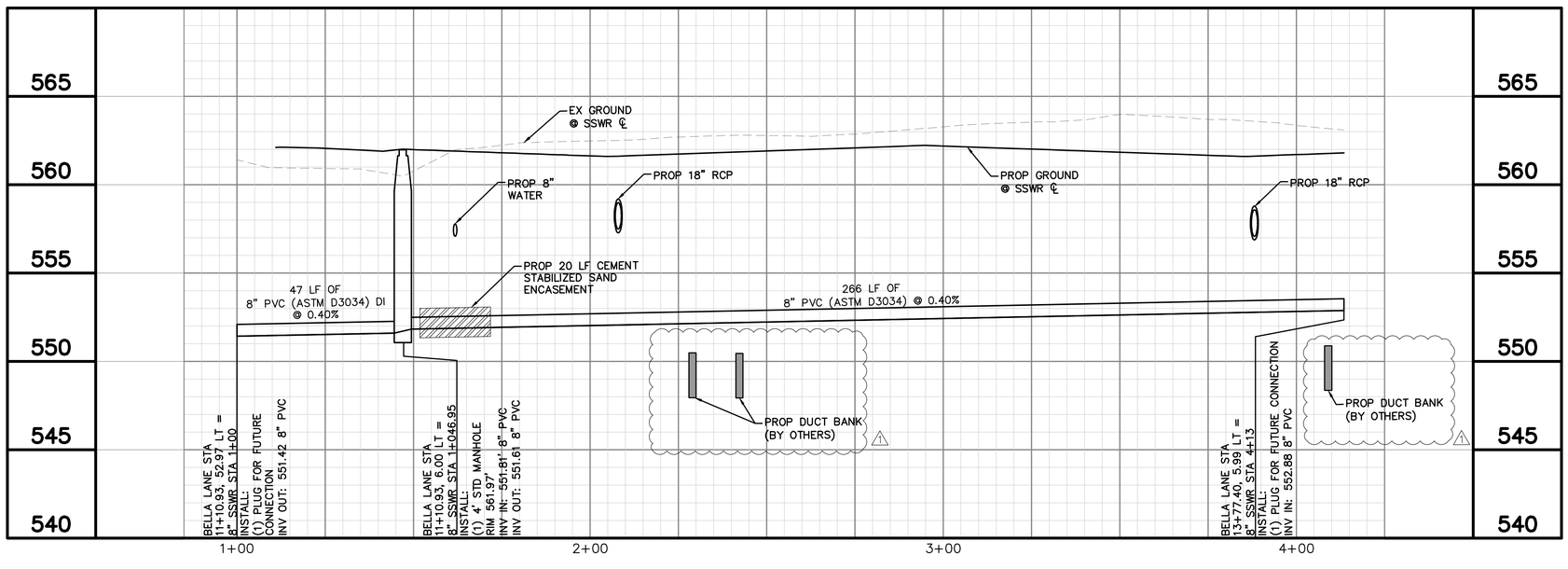


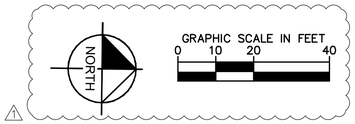


## UTILITY LEGEND

- PROPERTY LINE
- 8" W — PROP WATER LINE
- 8" S — PROP SANITARY SEWER LINE
- PROP WATER VALVE
- PROP FIRE HYDRANT
- PROP SANITARY SEWER MANHOLE
- G — EX GAS LINE
- U/T — EX UNDERGROUND TELEPHONE
- U/E — EX UNDERGROUND ELECTRIC
- OHE — EX OVERHEAD POWER LINE
- 8" W — EX WATER LINE
- 8" S — EX SANITARY SEWER LINE
- EX STORM SEWER LINE
- SANITARY SEWER/ WATER ABANDONMENT
- EX POWER POLE
- EX FIRE HYDRANT
- EX WATER VALVE
- EX SANITARY SEWER MANHOLE

NOTES:
1. CONTRACTOR IS RESPONSIBLE FOR RELOCATION OF ANY SIGNS AND COORDINATION WITH THE CITY ON ANY NECESSARY MODIFICATIONS.
2. CONTRACTOR IS RESPONSIBLE FOR LOCATING ALL IRRIGATION FACILITIES WITHIN PROJECT LIMITS.
3. THE EXISTENCE AND LOCATIONS OF ALL UNDERGROUND UTILITIES SHOWN ON THE DRAWINGS WERE OBTAINED FROM AVAILABLE RECORDS AND ARE APPROXIMATE. NEITHER THE OWNER NOR THE ENGINEER ASSUMES ANY RESPONSIBILITY FOR UTILITIES NOT SHOWN OR NOT IN THE LOCATION SHOWN. THE CONTRACTOR SHALL DETERMINE THE DEPTH AND LOCATION OF EXISTING UNDERGROUND UTILITIES PRIOR TO EXCAVATION AND SHALL BE REQUIRED TO TAKE ANY PRECAUTIONARY MEASURES TO PROTECT ALL LINES SHOWN AND/ OR ANY OTHER UNDERGROUND UTILITIES NOT OF RECORD OR NOT SHOWN ON THE PLANS. CONTRACTOR SHALL BE RESPONSIBLE FOR CONTACTING ALL FRANCHISE AND CITY UTILITIES PRIOR TO CONSTRUCTION.

!!WARNING!!

EXISTING UTILITIES IN THE AREA. CONTRACTOR SHALL FIELD VERIFY THE LOCATION OF ALL EXISTING UTILITIES WITH THE PROVIDER PRIOR TO START OF CONSTRUCTION AND SHALL IMMEDIATELY NOTIFY THE ENGINEER OF ANY CONFLICTS DISCOVERED. CONTRACTOR IS RESPONSIBLE FOR COORDINATING UTILITY RELOCATION WHERE NECESSARY AND PROTECTING EXISTING UTILITIES (SHOWN OR NOT SHOWN). IF ANY EXISTING UTILITIES ARE DAMAGED, THE CONTRACTOR SHALL REPLACE THEM AT THEIR OWN EXPENSE.

811 Know what's **below.** **Call** before you dig.

| No. | REVISIONS | DATE | BY |
|---|---|---|---|
| 1 | ADDENDUM #1 | 10/12/21 | CDS |

PROJECT NO. 2021-01C/ BID NO. 21-69


Kimley»Horn
2201 WEST ROYAL LANE, SUITE 275, IRVING, TX 75063
PHONE: 214-420-5600
WWW.KIMLEY-HORN.COM


© 2021 KIMLEY-HORN AND ASSOCIATES, INC.


TEXAS REGISTERED ENGINEERING FIRM #F-928


10/12/2021

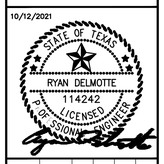


| | |
|---|---|
| KHA PROJECT | 063543031 |
| DATE | 10/12/2021 |
| SCALE | AS SHOWN |
| DESIGNED BY | RMD |
| DRAWN BY | CDS |
| CHECKED BY | LNA |

**TOWN OF ADDISON**
ALPHA ROAD CONN.
FROM FARMERS BRANCH
CREEK TO ALPHA ROAD

# SANITARY SEWER LINE PLAN AND PROFILE BEGIN TO END

SHEET NUMBER
C8.01


Plotted By: Shettigh, Cody October 11, 2021 - 11:39:19am K:\VLAC_Civil\063543031_Addison_Alpha_Road_Connect\C400\PlanSheets\SSWR Plan&Profile.dwg
This document, together with the concepts and designs presented herein, as an instrument of service, is intended only for the specific purpose and client for which it was prepared. Reuse of and improper reliance on this document without written authorization and adaptation by Kimley-Horn and Associates, Inc. shall be without liability to Kimley-Horn and Associates, Inc.

Plotted By: Shadbolt, Cody October 11, 2021 11:39:12am K:\JAC_Civil\063543031_Addison_Alpha_Road_Connector\CADD\PlanSheets\Erosion Control.dwg
This document, together with the concepts and designs presented herein, as an instrument of service, is intended only for the specific purpose and client for which it was prepared. Reuse of and improper reliance on this document without written authorization and adaptation by Kimley-Horn and Associates, Inc. shall be without liability to Kimley-Horn and Associates, Inc.

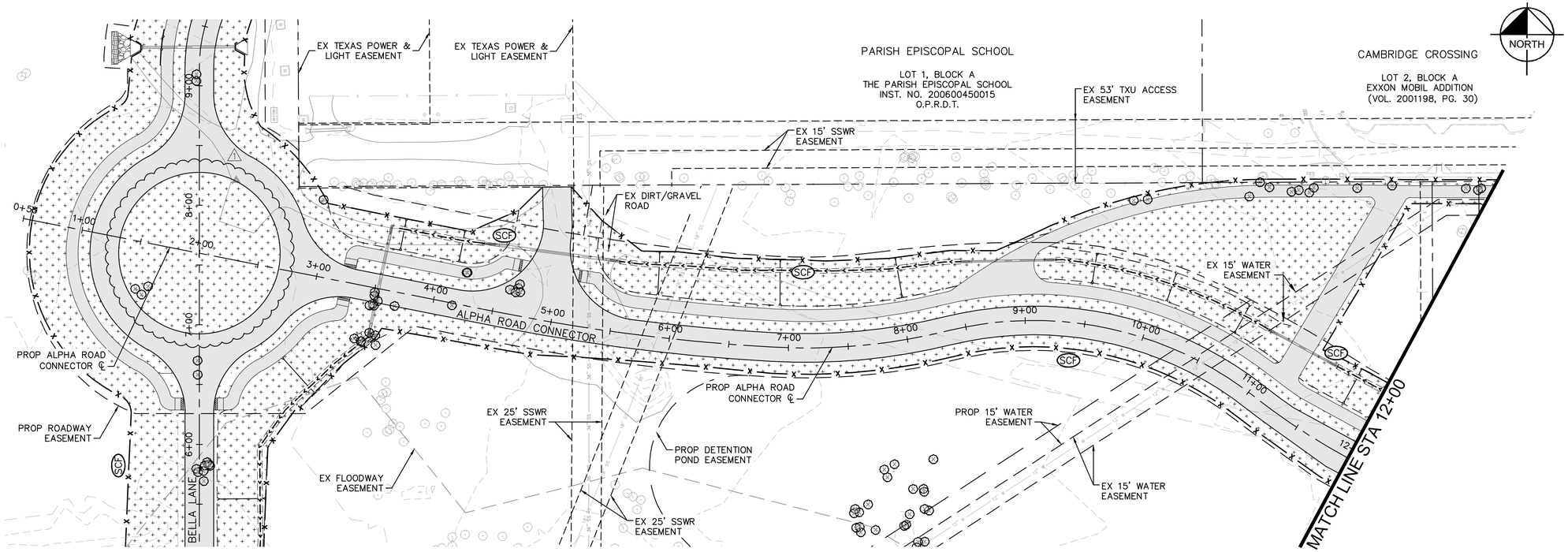


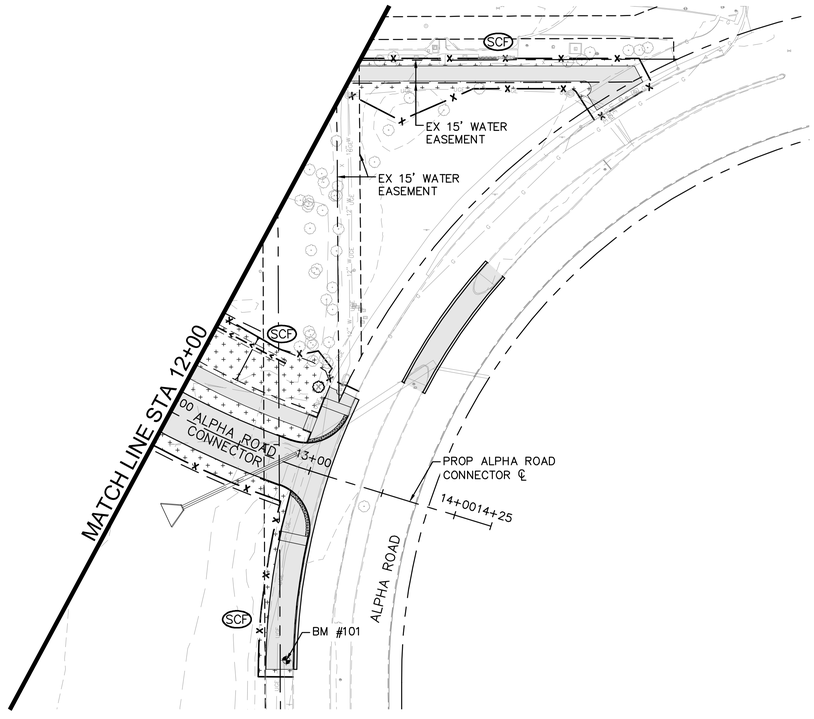


GRAPHIC SCALE IN FEET
0 25 50 100

## LEGEND

- SCF — SEDIMENT CONTROL FENCE
- IP — INLET PROTECTION
- RCD — ROCK CHECK DAM
- PROP CONCRETE
- HYDRAULIC MULCHING WITH 4" TOPSOIL

## EROSION CONTROL NOTES

1. EROSION CONTROL DEVICES AS SHOWN ON THE EROSION CONTROL PLAN FOR THE PROJECT SHALL BE INSTALLED PRIOR TO THE START OF LAND DISTURBING ACTIVITIES ON THE PROJECT.
2. ALL EROSION CONTROL DEVICES ARE TO BE INSTALLED DURING SITE PREP IN ACCORDANCE WITH THE APPROVED PLANS AND SPECIFICATIONS FOR THE PROJECT.
3. CONTRACTOR SHALL MINIMIZE THE REMOVAL OF GRASS COVER UNTIL ACTUAL WORK PHASE BEGINS.
4. IF THE EROSION CONTROL PLAN AS APPROVED CANNOT CONTROL EROSION AND OFF-SITE SEDIMENTATION FROM THE PROJECT, THE EROSION CONTROL PLAN WILL BE REQUIRED TO BE REVISED AND/OR ADDITIONAL EROSION CONTROL DEVICES WILL BE REQUIRED (NO SEPARATE PAY).
5. OFF-SITE SOIL BORROW AND SPOIL AREAS ARE CONSIDERED AS PART OF THE PROJECT SITE AND MUST ALSO COMPLY WITH THE EROSION CONTROL REQUIREMENTS FOR THIS PROJECT. THIS INCLUDES THE INSTALLATION OF BMP'S TO CONTROL OFFSITE SEDIMENTATION AND THE ESTABLISHMENT OF PERMANENT GROUND COVER ON DISTURBED AREAS PRIOR TO FINAL APPROVAL OF THE PROJECT.
6. INSPECTIONS SHALL BE MADE WEEKLY AND AFTER RAIN STORM EVENTS TO INSURE THAT THE DEVICES ARE FUNCTIONING PROPERLY.
7. CONTRACTOR SHALL BE RESPONSIBLE FOR IDENTIFYING APPROPRIATE CONSTRUCTION ENTRANCE. WHEN SEDIMENT OR MUD HAS CLOGGED THE VOID SPACES BETWEEN STONES OR MUD IS BEING TRACKED ONTO A PUBLIC ROADWAY, THE STABILIZED CONSTRUCTION ENTRANCE AGGREGATE PAD MUST BE WASHED DOWN OR REPLACED. RUNOFF FROM THE WASHDOWN OPERATION SHALL NOT BE ALLOWED TO DRAIN DIRECTLY OFF SITE WITHOUT FIRST FLOWING THROUGH ANOTHER BMP TO CONTROL OFF SITE SEDIMENTATION. PERIODIC RE-GRADING OR THE ADDITION OF NEW STONE MAY BE REQUIRED TO MAINTAIN THE EFFICIENCY OF THE INSTALLATION.
8. CONTRACTOR SHALL BE RESPONSIBLE FOR SUBMITTAL OF N.O.I., N.O.T. AND ANY ADDITIONAL INFORMATION REQUIRED BY THE E.P.A. CONTRACTOR SHALL COMPLY WITH ALL E.P.A. STORMWATER POLLUTION PREVENTION REQUIREMENTS.
9. PRIOR TO FINAL ACCEPTANCE AND/OR OPENING ROADWAY TO TRAFFIC, ALL DISTURBED AREAS SHALL BE STABILIZED AND EROSION CONTROL DEVICES SHALL BE REMOVED.
10. SEE GENERAL NOTES SHEET FOR EROSION CONTROL REQUIREMENTS.

811 Know what's below. Call before you dig.

| No. | REVISIONS | DATE | BY |
|---|---|---|---|
| 1 | ADDENDUM #1 | 10/12/21 | CDS |

PROJECT NO. 2021-01C/ BID NO. 21-69

Kimley»Horn
2201 WEST ROYAL LANE, SUITE 275, IRVING, TX 75063
PHONE: 214-420-5600
WWW.KIMLEY-HORN.COM
© 2021 KIMLEY-HORN AND ASSOCIATES, INC.
TEXAS REGISTERED ENGINEERING FIRM #F-928

10/12/2021

STATE OF TEXAS
RYAN DELMOTTE
114242
LICENSED PROFESSIONAL ENGINEER

| | | | |
|---|---|---|---|
| KHA PROJECT 063543031 | DATE 10/12/2021 | SCALE AS SHOWN | DESIGNED BY RMD |
| | | DRAWN BY CDS | CHECKED BY LNA |

# TOWN OF ADDISON
## ALPHA ROAD CONN. FROM FARMERS BRANCH CREEK TO ALPHA ROAD

# EROSION CONTROL ALPHA ROAD CONNECTOR

SHEET NUMBER
C9.02

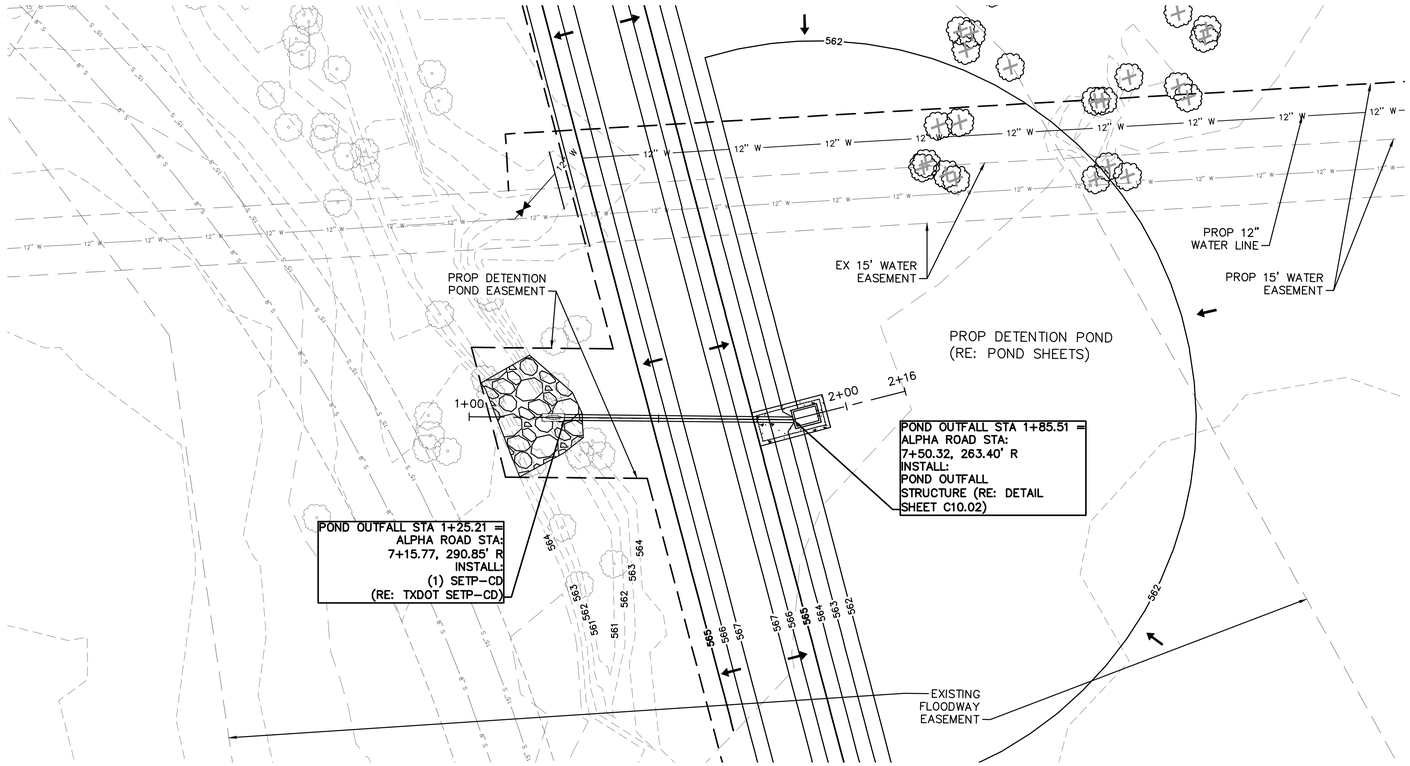


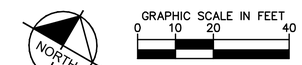


## LEGEND

- EX ROW
- EX EASEMENT
- PROP EASEMENT
- PROP STORM DRAIN
- 565 EX CONTOURS
- 565 PROP CONTOURS
- PROP 24" ROCK RIPRAP
- PROP CONCRETE RIPRAP

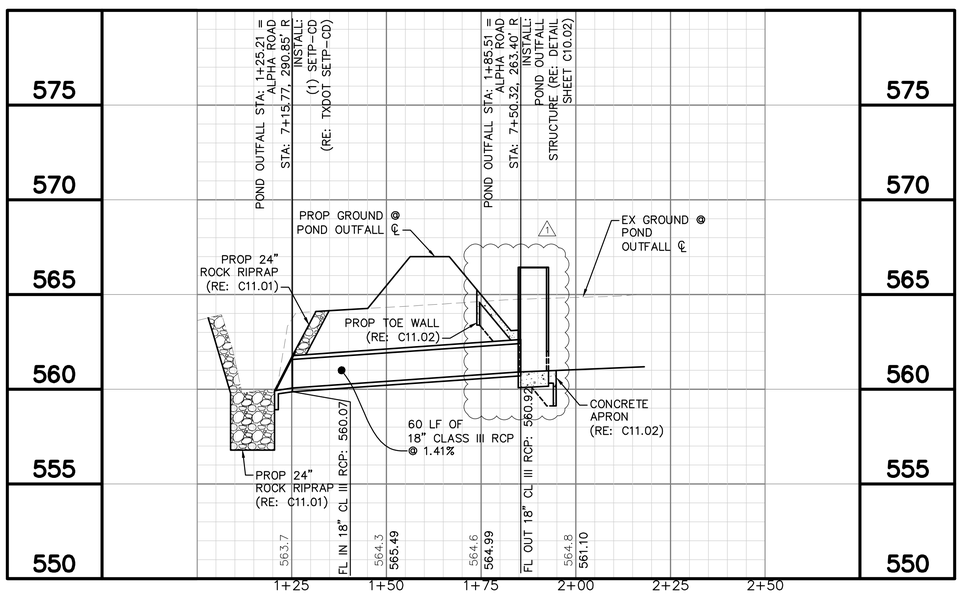


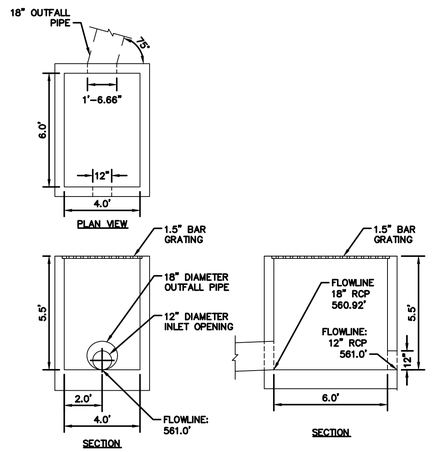


POND OUTLET STRUCTURE DETAIL
1"=4'

OUTLET STRUCTURE NOTES:

1. OUTLET STRUCTURE SHALL BE PRECAST CONCRETE. CONCRETE SHALL BE IN ACCORDANCE WITH TXDOT ITEM 421, CLASS C.
2. CONTRACTOR SHALL SUBMIT SHOP DRAWINGS AND ENGINEERING CALCULATIONS FOR OUTLET STRUCTURE. MAT SLAB OR FOOTING SHALL BE DESIGNED IN ACCORDANCE WITH THE PROJECT GEOTECHNICAL REPORT. SHOP DRAWINGS AND CALCULATIONS SHALL BE SIGNED AND SEALED BY A PROFESSIONAL ENGINEER LICENSED IN THE STATE OF TEXAS.
3. STEEL BAR GRATING SHALL BE REMOVABLE 1.5" STEEL GRATING, BOLTED OR CLIPPED.

811 Know what's below. Call before you dig.

| No. | REVISIONS | DATE | BY |
|---|---|---|---|
| 1 | ADDENDUM #1 | 10/12/21 | BCS |

PROJECT NO. 2021-01C/ BID NO. 21-69


Kimley»Horn
2201 WEST ROYAL LANE, SUITE 275, IRVING, TX 75063
PHONE: 214-420-5600
WWW.KIMLEY-HORN.COM


© 2021 KIMLEY-HORN AND ASSOCIATES, INC.
TEXAS REGISTERED ENGINEERING FIRM #F-928


10/12/2021
STATE OF TEXAS
RYAN DELMOTTE
114242
LICENSED
PROFESSIONAL ENGINEER

KHA PROJECT 063543031
DATE 10/12/2021
SCALE AS SHOWN
DESIGNED BY RMD
DRAWN BY CDS
CHECKED BY LNA

# TOWN OF ADDISON
ALPHA ROAD CONN.
FROM FARMERS BRANCH
CREEK TO ALPHA ROAD

# DETENTION POND OUTFALL DRAINAGE SYSTEM D

SHEET NUMBER
C10.02


Plotted By: Walker, Austin October 12, 2021 03:27:46pm K:\LAC_Civil\063543031_Addison_Alpha_Road_Connector\CADD\PlanSheets\Drainage Plan&Profile2.dwg
This document, together with the concepts and designs presented herein, as an instrument of service, is intended only for the specific purpose and client for which it was prepared. Reuse of and improper reliance on this document without written authorization and adaptation by Kimley-Horn and Associates, Inc. shall be without liability to Kimley-Horn and Associates, Inc.

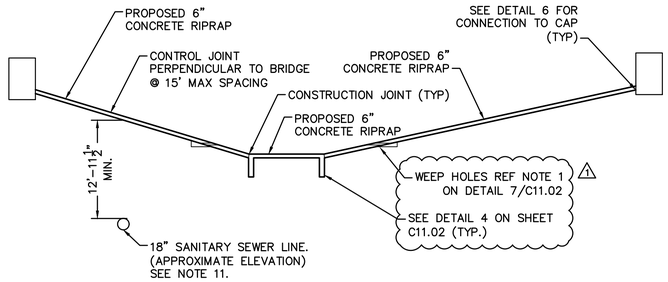


1 C11.02 **CHANNEL LINING TYPICAL SECTION**

SCALE: 1" = 10' [RE: C11.01]

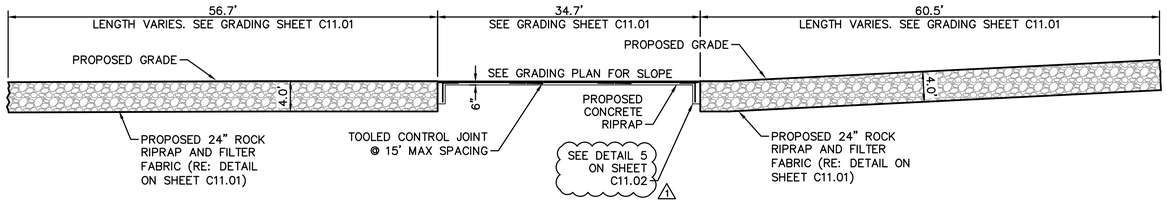


2 C11.02 **CHANNEL LINING TYPICAL SECTION**

SCALE: 1" = 10' [RE: C11.01]

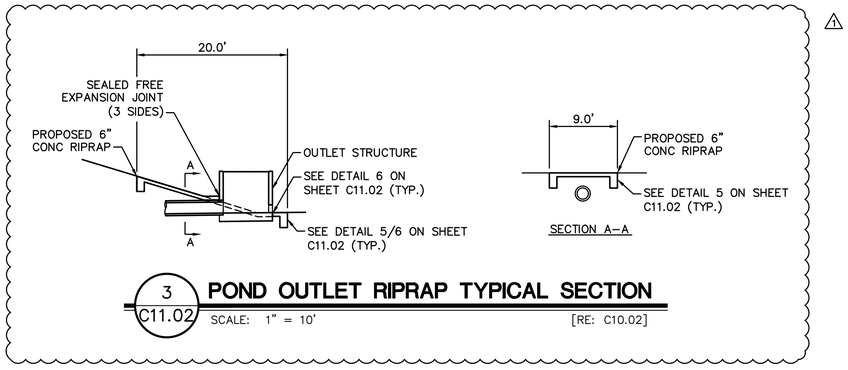


3 C11.02 **POND OUTLET RIPRAP TYPICAL SECTION**

SCALE: 1" = 10' [RE: C10.02]

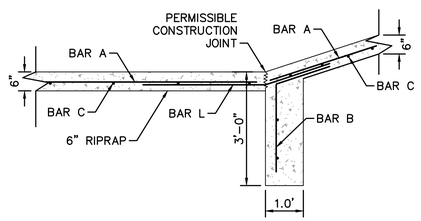


4 C11.02 **6" RIPRAP CHANNEL GRADE BREAK DETAIL**

SCALE: 1/2" = 1'

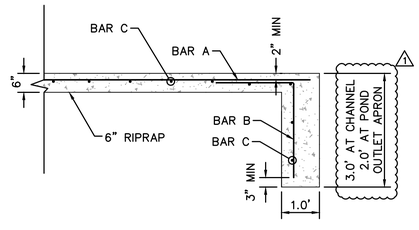


5 C11.02 **TYPICAL 6" CONCRETE RIPRAP DETAIL**

SCALE: 1/2" = 1'

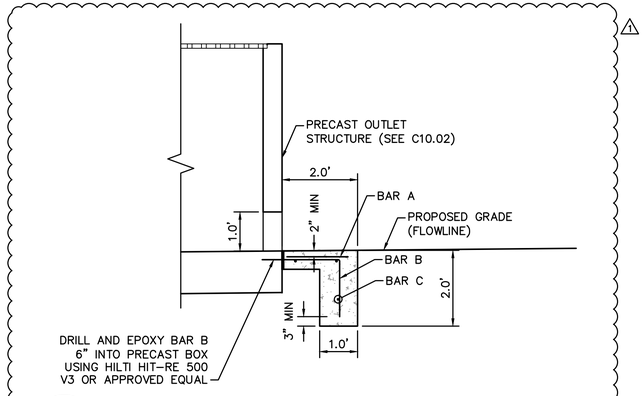


6 C11.02 **RIPRAP AT POND OUTLET FLOWLINE**

SCALE: 1/2" = 1'

| REBAR SCHEDULE | | |
|---|---|---|
| BAR | SIZE | SPACING |
| A | 4 | 1'–0" |
| B | 4 | 1'–0" |
| C | 4 | 1'–0" |
| L | 4 | 1'–0" |

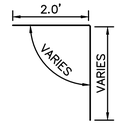


BAR B

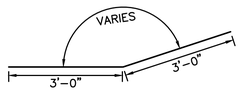


BAR L

NOTES:

1. CHAMFER ALL EXPOSED EDGES OF CONCRETE ¾".
2. ALL CONCRETE SHALL HAVE A 28–DAY COMPRESSIVE STRENGTH OF 3,000 PSI.
3. ALL CLEAR COVER FOR CONCRETE SHALL BE 3 INCHES UNLESS OTHERWISE SHOWN.
4. ALL REINFORCING STEEL SHALL BE ASTM 615 GR 60 STEEL.
5. ALL REINFORCING IN CHANNEL BOTTOM SHALL BE EPOXY COATED. EPOXY MATERIAL SHALL BE SUBMITTED TO OWNER FOR APPROVAL PRIOR TO CONSTRUCTION.
6. MIX DESIGNS FOR CONCRETE SHALL BE SUBMITTED TO OWNER FOR APPROVAL PRIOR TO CONSTRUCTION.
7. REINFORCING BAR DIMENSIONS ARE TO OUTSIDE OF BAR UNLESS OTHERWISE NOTED.
8. CONTRACTOR TO VERIFY ALL ELEVATIONS AND DIMENSIONS.
9. ROCK RIPRAP SHALL BE A MINIMUM OF 24–INCH (NOMINAL SIZE). ROCK RIPRAP SHALL CONFORM TO TXDOT ITEM 432 RIPRAP.
10. RCP SHALL HAVE PRECAST BEVELED ENDS TO MATCH RIPRAP GRADE WITH 12" OF EXPOSED REINFORCING. CONTRACTOR SHALL SUBMIT SHOP DRAWINGS FOR REINFORCEMENT NEEDED TO DEVELOP THE CONNECTION BETWEEN RIPRAP AND RCP (SEALED BY A PROFESSIONAL ENGINEER REGISTERED IN THE STATE OF TEXAS).
11. VERTICAL CLEARANCE SHALL BE A MIN. 12'–11½" AS SHOWN ON THE PLANS. CONTRACTOR SHALL LOCATE AND VERIFY ELEVATIONS OF UTILITIES PRIOR TO ANY DRILLING OR EXCAVATION. CONTRACTOR IS RESPONSIBLE TO PROTECT ALL EXISTING UTILITIES DURING CONSTRUCTION.
12. FOR DETAILS AND SPECIFICATIONS NOT ADDRESSED HEREIN, SEE TXDOT STANDARDS AND SPECIFICATIONS.

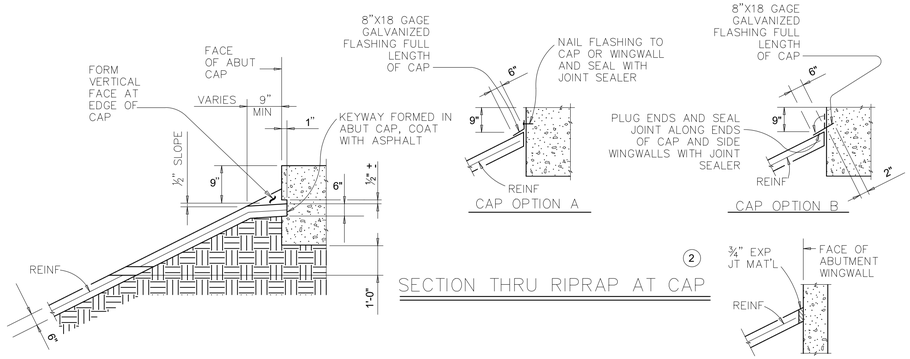


1. PROVIDE LOWER LEVEL OF 2" DIA WEEP HOLES AT 10' C–C BACKED BY 1 CF PACKET OF GRAVEL AND GALVANIZED HARDWARE CLOTH AT ALL LOCATIONS.
2. PROVIDE SEALING OPTIONS FOR JOINT BETWEEN THE FACE OF CAP AND RIPRAP AS DESIGNATED BY THE ENGINEER OR AS SHOWN ELSEWHERE ON PLANS.
3. FLASHING (SHOWN IN CAP OPTION A) SHALL BE USED AT WINGWALL IN ADDITION TO EXP JT MAT'L.
4. 8" x 18 GAGE GALC SHEET METAL.
5. REINFORCING STEEL IS CONTINUOUS THROUGH RIPRAP CONSTRUCTION JOINTS. PROVIDE REINFORCING STEEL THAT EXTENDS 2'–0" MINIMUM INTO ADJACENT RIPRAP ON EACH SIDE OF CONSTRUCTION JOINT EVEN IF SYNTHETIC REINFORCING FIBER IS UTILIZED.

7 C11.02 **CONCRETE RIPRAP**

SCALE: NTS

Know what's **below.** **Call** before you dig.

| No. | REVISIONS | DATE | BY |
|---|---|---|---|
| 1 | ADDENDUM #1 | 10/12/21 | BCS |

PROJECT NO. XXXXX/ BID NO. XXXX–XXX

Kimley»Horn
2201 WEST ROYAL LANE, SUITE 275, IRVING, TX 75063
PHONE: 214-420-2600
WWW.KIMLEY-HORN.COM
© 2021 KIMLEY-HORN AND ASSOCIATES, INC.
TEXAS REGISTERED ENGINEERING FIRM #F-928

STATE OF TEXAS
BRIAN J. LAFOY
89363
LICENSED
PROFESSIONAL ENGINEER
10/12/2021

| | |
|---|---|
| KHA PROJECT | 063543031 |
| DATE | 10/12/2021 |
| SCALE | AS SHOWN |
| DESIGNED BY | BCS |
| DRAWN BY | AT/TLS |
| CHECKED BY | BJL |

**TOWN OF ADDISON**
ALPHA ROAD CONN.
FROM FARMERS BRANCH
CREEK TO ALPHA ROAD

FARMERS BRANCH CREEK TRIBUTARY 1
CHANNEL LINING DETAILS

SHEET NUMBER
C11.02

Plotted By:Sutherland, Clay October 12, 2021 02:32:56pm K:\LAC_Civil\063543031_Addison_Alpha_Road_Connector\CADD\PlanSheets\Channel Details.dwg
This document, together with the concepts and designs presented herein, as an instrument of service, is intended only for the specific purpose and client for which it was prepared. Reuse of and improper reliance on this document without written authorization and adaptation by Kimley-Horn and Associates, Inc. shall be without liability to Kimley-Horn and Associates, Inc.

ADDISON PUBLIC WORKS & ENGINEERING SERVICES

Kimley»Horn
2201 West Royal Lane, Irving, Texas 75063
kimley-horn.com 214.420.5600
Texas Firm Registration No. F-928

**Addendum No. 2**

**BELLA LANE SOUTH EXTENSION & ALPHA ROAD CONNECTOR**

**TOWN OF ADDISON, TEXAS**
**PUBLIC WORKS AND ENGINEERING SERVICES**
**BID NUMBER 21-69**

**10/18/2021**




To: All Plan Holders of Record

This addendum forms part of the Contract Documents and modifies the Contract Documents and Specifications as noted below. Acknowledge receipt of the Addendum in the space provided on the Proposal Form and on the outer envelope of the Bid Proposal. Failure to acknowledge receipt of this Addendum may subject the Bidder to disqualification.

This addendum consists of 5 pages and 3 attachments.

**QUESTIONS RECEIVED ON CIVCAST PRIOR TO DEADLINE FOR QUESTIONS ON 10/13/2021 AT 5:00 PM CST.**

1. Will a slip form paving machine be needed or are we allowed to use a vibratory truss screed?

   Answer: Slip-form paving operations are required for this project except in small and/or irregular area of placements. These may include but are not limited to; transitional areas to tie to existing pavement, driveways, separate concrete curb and gutter, and traffic circle. Non slip-form paving areas shall be approved by the Owner prior to construction.

2. Special Provision 8 - Permits, Licenses and Regulations - What permits will the Contractor be required to obtain, and what are the fees to obtain them?

   Answer: The Town of Addison and the City of Farmers Branch does not require any additional permitting for this project. The contractor will still need to obtain the environmental permit required per item L6 – Storm Water Pollution Prevention Plan.

3. Has the Town acquired all of the Right-of-Way for this Project?

   Answer: The easement required to perform the work will be obtained prior to issuance of the Notice to Proceed. As discussed in pre-bid conference, Notice to Proceed is anticipated to be issued in January 2022.

4. Special Provision 50 - Traffic Control - Section e. states the Contractor shall provide a Traffic Control Plan signed and sealed by a P.E. Will the Contractor be allowed to use the traffic control plan that is provided in the plans, and not supply their own plan?

Answer: The contractor is allowed to use the traffic control plan that is provided in plans. If the contractor elects to modify the traffic control plan, the contractor shall submit a modified traffic control plan signed and sealed by a professional engineer.

5. Special Provision 33 states the Town will pay an independent testing lab to furnish testing. Special Provision 66 states the Contractor will be responsible for providing some tests that are normally performed by the independent testing lab referred to in Special Provision 33. Will the Town provide testing, or will the Contractor be required to provide some of the testing?

   Answer: The Town will pay an independent testing lab to furnish testing for construction materials. The contractor will be required to provide some of the testing. Special Provision 66 has been updated to clarify the testing that shall be furnished and performed by the Contractor.

6. Just to be clear, you have provided a lump sum earthwork item with no informational quantity or adequate information on the drawings to assess the scope and magnitude of the earthwork for this project, AND want the Contractor to release the Engineer and the Town of Addison from any liability from information, accurate or not, they might, or do, supply? That seems to violate, or nullify, several of the contract provisions relative to claims, extra work and changes in the work. Can you post the data so it is the same for all at the time of retrieval, and issues with altering or corrupting are irrelevant?

   Answer: Earthwork quantities are documented below for bidder's information only. CAD files are also available to bidders. A release form has been provided on CivCast to allow bidders to request CAD files. Earthwork related bid items will remain price per Lump Sum (LS).

| Item No. | Description | Quantity | Unit of Measure |
|---|---|---|---|
| P10 | UNCLASSIFIED STREET EXCAVATION | 1,232 | CY |
| P11 | BORROW AND SPOIL (ROADWAY) | 26,368 | CY |
| H1 | UNCLASSIFIED POND AND CREEK EXCAVATION | 24,990 | CY |
| H2 | BORROW AND SPOIL (DETENTION POND AND CREEK) | 1,000 | CY |
| H3 | BORROW AND SPOIL (DETENTION POND AND CREEK) (SELECT FILL) | 753 | CY |

7. The project manual includes a copy of a Geotechnical Report for this project. It is not one of the eleven documents listed in the modified listing of Contract Documents in the CONTRACT AGREEMENT. Is the Contractor supposed to be able to rely on information contained in the report in preparation of his bid, and if not, for what purpose was it published?

   Answer: The contractor is able to rely on information contained in the Geotechnical Report for this project. In the Contract Documents listing, the Geotechnical Report shall be considered as, "any other bid materials distributed by the Owner that relate to the Project."

8. It appears we are missing C11.01. Please advise. Thank you.

   Answer: Plan sheet C11.01 was not updated. Please disregard from Addendum No. 1 "Changes to Plans" list.

9. Is the Type B Asphalt Drive at Bella Lane station 13+15 4" thick?

   Answer: Yes.

10. On C3.09 the pass through on Alpha rd looks like you are eliminating the pass through, but you shade it all as prop pavement. Can you give a typical cross section through here showing what you are wanting?

    Answer: Proposed pavement hatch has been updated accordingly. See revised plan sheet C3.09.

11. Can we get the bid form in excel spreadsheet?

    Answer: Bid form in excel format has been uploaded to www.civcastusa.com. Bid form in excel format is for the bidder's convenience only and bidders shall utilize at their own risk. Paper shall be required. An electronic copy of the bid (.PDF) shall be included in the envelope when the paper bid is submitted. Submittal of file in excel format will not be accepted.

12. How many copies of our proposal do we need to submit?

    Answer: One paper copy of the proposal and one electronic copy of the proposal shall be submitted in accordance with the Instructions to Bidders section L.

13. What documents do we need to submit with our proposal?

    Answer: The bidder shall submit a bid security, bidders qualifications statement, and proposal form, along with other documents required listed on the instructions to bidders.

**CHANGES TO SPECIFICATIONS**

1. Section CA – Contract Agreement

   Replace the Contract Agreement with the attached.

2. Section PF – Proposal Form

   Replace the Proposal Form with the attached.

3. Section SP – Special Provisions

   Page – SP10 Remove, **"Bid Item No. P6 - REMOVAL OF EX 54" RCP**

   **This item shall consist of the removal and disposal of existing 54" reinforced concrete pipe at the locations shown in the drawings. Existing 54" reinforced concrete pipe shall be removed in accordance with appropriate specifications, details, and notes, including NCTCOG Item 701.2.**

**Measurement and payment shall be made on the basis of price bid per linear feet (LF) and shall be total compensation for furnishing all materials, tools, equipment, labor, and any other incidentals necessary to complete the work."** and replace with the following:

**"Bid Item No. P6 - REMOVAL OF EX RCP**

**This item shall consist of the removal and disposal of existing 30" and 54" reinforced concrete pipe at the locations shown in the drawings. Existing 30" and 54" reinforced concrete pipe shall be removed in accordance with appropriate specifications, details, and notes, including NCTCOG Item 701.2.**

**Measurement and payment shall be made on the basis of price bid per linear feet (LF) and shall be total compensation for furnishing all materials, tools, equipment, labor, and any other incidentals necessary to complete the work."**

4. Section SP – Special Provisions

Page – SP13 Add, **"Traffic circle pavement reinforcement shall be placed radially. Contractor shall submit a jointing plan for review prior to construction**." after, **"NCTCOG Item 303."** and before, **"Measurement and payment".**

5. Section SP – Special Provisions

Page – SP13-SP15 Remove bid item, **"Bid Item. P18 – 6" CURB AND GUTTER".** Renumber subsequent bid items by minus one (-1) accordingly. Refer to updated Proposal Form for bid item numbering.

6. Section SP – Special Provisions

Page – SP19 Remove, "**Bid Item No. D3 – 30" RCP CLASS III"** and replace with, **Bid Item No. D3 – 54" RCP CLASS III"**

7. Section SP – Special Provisions

Page – SP48 Remove, "**bid item A-31.**" and replace with, "**bid item P2.**"

8. Section SP – Special Provisions

Page- SP-52 Remove, **"66. TESTING REQUIREMENTS: Testing shall be conducted in accordance with Town of Addison Specifications except as modified in the Special Provisions, Technical Specifications, or as on the plans. The Town of Addison will provide random testing. The Contractor shall coordinate construction with the Town of Addison, and shall provide assistance to the testing labs by providing trench safety, excavation, or other work to insure all testing requirements are met. Work performed to accommodate testing will be a subsidiary item and no extra payment will be authorized. All retesting shall be at the expense of the Contractor. As a general guide, the Contractor shall be responsible for providing the following tests:**

**(1) Density and associated tests on embedment and backfill.**

**(2) Compressive strength tests on concrete.**

**(3) Gradation soil tests on backfill as may be required.**

**(4) Pressure test, bacteriological tests for disinfection of water lines,**

**(5) Mandrel test for gravity sewer pipeline**

**(6) Vacuum test for SSMH for water tightness.**

**(7) Providing test results from manufacturer and as specified in Town of Addison Specifications (NTCOG)"** and replace with the following:

**"66. TESTING REQUIREMENTS: Testing shall be conducted in accordance with Town of Addison Specifications except as modified in the Special Provisions, Technical Specifications, or as on the plans. As a general guide, the Contractor shall be responsible for providing the following tests:**

**(1) Pressure test, bacteriological tests for disinfection of water lines,**

**(2) Mandrel test for gravity sewer pipeline**

**(3) Vacuum test for SSMH for water tightness.**

**(4) Providing test results from manufacturer and as specified in Town of Addison Specifications (NCTCOG)**

**No separate pay will be provided to perform any additional testing not usually performed by the independent testing lab referred to in Special Provision 33, unless otherwise noted."**

**CHANGES TO PLANS**

1. Replace PLAN SHEETS C1.03, C3.09, C4.09, C4.10, C4.11, C4.12, C4.15, C9.02 with the plan sheets attached. Revisions have been noted on each sheet.

END OF ADDENDUM NO. 2

**SECTION CA**

# CONTRACT AGREEMENT

# CONTRACT AGREEMENT

STATE OF TEXAS

COUNTY OF DALLAS

THIS AGREEMENT is made and entered into this _____ day of _____, 2021, by and between the Town of Addison, of the County of Dallas and State of Texas, acting through its City Manager, thereunto duly authorized so to do, Party of the First Part, hereinafter termed the OWNER, and _____, of the City of _____, County of _____, State of _____, Party of the Second Part, hereinafter termed CONTRACTOR.

WITNESSETH: That for and in consideration of the payment and agreement hereinafter mentioned, to be made and performed by the OWNER, the said CONTRACTOR hereby agrees with the said OWNER to commence and complete construction of certain improvements as follows:

**BELLA LANE SOUTH EXTENSION & ALPHA ROAD CONNECTOR**

**PUBLIC WORKS AND ENGINEERING SERVICES BID NUMBER 21-69**

and all extra work in connection therewith, under the terms as stated in the General and Specific Conditions of the AGREEMENT; and at his own proper cost and expense to furnish all the materials, supplies, machinery, equipment, tools, superintendence, labor, insurance and other accessories and services necessary to complete the said construction, in accordance with the conditions and prices stated in the Proposal attached hereto and in accordance with the Contract Documents.

The Contract Documents shall consist of the following documents:

1. this Contract Agreement;
2. properly authorized change orders;
3. any listed and numbered addenda;
4. the Special Provisions;
5. Technical Specifications & Construction Drawings;
6. the OWNER's Standard Construction Details;
7. the October 2017 5th Edition of the Public Works Construction Standards - North Central Texas as amended and published by the North Central Texas Council of Governments, as amended by the Owner (collectively, the "NCTCOG Specifications ");
8. the OWNER’s written notice to proceed to the CONTRACTOR;
9. the Contractor’s Bid Proposal;
10. the Performance, Payment, and Maintenance Bonds; and,
11. any other bid materials distributed by the Owner that relate to the Project.

These Contract Documents are incorporated by reference into this Construction Agreement as if set out here in their entirety. The Contract Documents are intended to be complementary; what is called for by one document shall be as binding as if called for by all Contract Documents. It is specifically provided, however, that in the event of any inconsistency in the Contract Documents, the inconsistency shall be resolved by giving precedence to the Contract Documents in the order in which they are listed herein above. If, however, there exists a conflict or inconsistency between the Technical Specifications and the Construction Drawings it shall be the Contractor's obligation to seek clarification as to which requirements or provisions control before undertaking any work on that component of the project. Should the Contractor fail or refuse to seek a clarification of such conflicting or inconsistent requirements or provisions prior to any work on that component of the project, the Contractor shall be solely responsible for the costs and expenses - including additional time - necessary to cure, repair and/or correct that component of the project.

The CONTRACTOR hereby agrees to commence work within ten (10) calendar days after the date of written notice to do so shall have been given to him, to complete the work within three hundred and thirty **(**330) calendar days, after he commences work, subject to such extensions of time as are provided by the General Provisions.

The OWNER agrees to pay the CONTRACTOR _____ _____ Dollars **($_____)** in current funds for the performance of the Contract in accordance with the Proposal submitted thereof, subject to additions and deductions, as provided in the General Provisions, and to make payments of account thereof as provided therein.

IN WITNESS WHEREOF, the parties of these presents have executed this AGREEMENT in the year and day first above written.

**TOWN OF ADDISON, TEXAS (OWNER)** **ATTEST:**

By: _____ By: _____
City Manager

(CONTRACTOR) ATTEST:

By: _____ By: _____

The following to be executed if the CONTRACTOR is a corporation:

I, _____ certify that I am the secretary of the corporation named as CONTRACTOR herein; that _____, who signed this Contract on behalf of the CONTRACTOR is the _____ (official title) of said corporation; that said Contract was duly signed for and in behalf of said corporation by authority of its governing body, and is within the scope of its corporate powers.

Signed: _____

Corporate Seal

**SECTION PF-1**

# PROPOSAL FORM

# PROPOSAL FORM

_____ , 2021

TO: The Honorable Mayor and Town Council
Town of Addison, Texas

Gentlemen:

The undersigned bidder, having examined the plans, specifications and contract documents, and the location of the proposed work, and being fully advised as to the extent and character of the work, proposes to furnish all equipment and to perform labor and work necessary for completion of the work described by and in accordance with the Plans, Specifications and Contract for the following prices, to wit:

Signed by: _____

ACKNOWLEDGMENT OF ADDENDA:

The Bidder acknowledges receipt of the following addenda:

Addendum No. 1 _____

Addendum No. 2 _____

Addendum No. 3 _____

The following pages contain all bid items for:

BID SCHEDULE – BELLA LANE SOUTH EXTENSION & ALPHA ROAD CONNECTOR
BID NUMBER 21-69

| Item No. | Name of Pay Item with Unit Price in Words | Est. Quantity | Unit | Unit Bid Price | Amount Bid |
|---|---|---|---|---|---|
| **BASE BID - STREET IMPROVEMENTS** | | | | | |
| **P1** | MOBILIZATION (5% MAX) | 1 | LS | | |
| | Complete in Place, for the Sum of<br>_____ Dollars and<br>_____ Cents per unit | | | $ | $ |
| **P2** | BARRICADES, SIGNS, AND TRAFFIC HANDLING | 1 | LS | | |
| | Complete in Place, for the Sum of<br>_____ Dollars and<br>_____ Cents per unit | | | $ | $ |
| **P3** | PROJECT SIGN | 2 | EA | | |
| | Complete in Place, for the Sum of<br>_____ Dollars and<br>_____ Cents per unit | | | $ | $ |
| **P4** | GENERAL SITE PREPARATION | 1 | LS | | |
| | Complete in Place, for the Sum of<br>_____ Dollars and<br>_____ Cents per unit | | | $ | $ |
| **P5** | REMOVE EX HEADWALL | 1 | EA | | |
| | Complete in Place, for the Sum of<br>_____ Dollars and<br>_____ Cents per unit | | | $ | $ |
| 2 **P6** | REMOVAL OF EX RCP | 19 | LF | | |
| | Complete in Place, for the Sum of<br>_____ Dollars and<br>_____ Cents per unit | | | $ | $ |
| **P7** | REMOVE EXISTING CONCRETE SIDEWALK/RAMPS | 425 | SY | | |
| | Complete in Place, for the Sum of<br>_____ Dollars and<br>_____ Cents per unit | | | $ | $ |
| **P8** | REMOVE EXISTING ASPHALT PAVEMENT | 480 | SY | | |
| | Complete in Place, for the Sum of<br>_____ Dollars and<br>_____ Cents per unit | | | $ | $ |
| **P9** | REMOVE EXISTING TREES | 116 | EA | | |
| | Complete in Place, for the Sum of<br>_____ Dollars and<br>_____ Cents per unit | | | $ | $ |
| **P10** | UNCLASSIFIED STREET EXCAVATION | 1 | LS | | |
| | Complete in Place, for the Sum of<br>_____ Dollars and<br>_____ Cents per unit | | | $ | $ |
| **P11** | BORROW AND SPOIL (ROADWAY) | 1 | LS | | |
| | Complete in Place, for the Sum of<br>_____ Dollars and<br>_____ Cents per unit | | | $ | $ |
| **P12** | MOISTURE TREATED SUBGRADE | 7,180 | SY | | |
| | Complete in Place, for the Sum of<br>_____ Dollars and<br>_____ Cents per unit | | | $ | $ |

| Item No. | Name of Pay Item with Unit Price in Words | Est. Quantity | Unit | Unit Bid Price | Amount Bid |
|---|---|---|---|---|---|
| **P13** | 6" LIME STABILIZED SUBGRADE | 1,145 | SY | | |
| | Complete in Place, for the Sum of<br>_____ Dollars and<br>_____ Cents per unit | | | $ | $ |
| **P14** | HYDRATED LIME | 25 | TON | | |
| | Complete in Place, for the Sum of<br>_____ Dollars and<br>_____ Cents per unit | | | $ | $ |
| **P15** | 4" TYP B HMAC (TXDOT) | 30 | TON | | |
| | Complete in Place, for the Sum of<br>_____ Dollars and<br>_____ Cents per unit | | | $ | $ |
| 2 **P16** | 8" REINFORCED CONCRETE PAVEMENT (STREET) | 6,299 | SY | | |
| | Complete in Place, for the Sum of<br>_____ Dollars and<br>_____ Cents per unit | | | $ | $ |
| **P17** | 10" PORTLAND CEMENT CONC PAVEMENT W/ 6" MONO CURB ) | 1,050 | SY | | |
| | Complete in Place, for the Sum of<br>_____ Dollars and<br>_____ Cents per unit | | | $ | $ |
| 2 **P18** | REINFORCED CONCRETE STREET HEADERS | 540 | LF | | |
| | Complete in Place, for the Sum of<br>_____ Dollars and<br>_____ Cents per unit | | | $ | $ |
| **P19** | 5" CONCRETE SIDEWALK | 3,100 | SY | | |
| | Complete in Place, for the Sum of<br>_____ Dollars and<br>_____ Cents per unit | | | $ | $ |
| **P20** | ACCESSIBLE RAMP | 12 | EA | | |
| | Complete in Place, for the Sum of<br>_____ Dollars and<br>_____ Cents per unit | | | $ | $ |
| **P21** | RAIL (HANDRAIL) (TY F) | 35 | LF | | |
| | Complete in Place, for the Sum of<br>_____ Dollars and<br>_____ Cents per unit | | | $ | $ |
| **P22** | INSTALL NEW SIGN AND SIGN POST ASSEMBLY | 20 | EA | | |
| | Complete in Place, for the Sum of<br>_____ Dollars and<br>_____ Cents per unit | | | $ | $ |
| **P23** | REFL PAV MRKG TY I & TY II (W) 4" SOLID | 3,300 | LF | | |
| | Complete in Place, for the Sum of<br>_____ Dollars and<br>_____ Cents per unit | | | $ | $ |
| **P24** | REFL PAV MRKG TY I & TY II (Y) 4" SOLID | 3,050 | LF | | |
| | Complete in Place, for the Sum of<br>_____ Dollars and<br>_____ Cents per unit | | | $ | $ |

| Item No | Name of Pay Item with Unit Price in Words | Est. Quantity | Unit | Unit Bid Price | Amount Bid |
|---|---|---|---|---|---|
| **P25** | REFL PAV MRKG TY I & TY II (Y) 4" BROKEN | 140 | LF | | |
| | Complete in Place, for the Sum of<br>_____<br>_____ Dollars and<br>_____ Cents per unit | | | $ | $ |
| **P26** | REFL PAV MRKG TY I & TY II (W) ARROW | 3 | EA | | |
| | Complete in Place, for the Sum of<br>_____<br>_____ Dollars and<br>_____ Cents per unit | | | $ | $ |
| **P27** | REFL PAV MRKG TY I & TY II (W) 24" STOP BAR MARKING | 31 | LF | | |
| | Complete in Place, for the Sum of<br>_____<br>_____ Dollars and<br>_____ Cents per unit | | | $ | $ |
| **P28** | REFL PAV MRKG TY I & TY II (W) 5' X 8' CROSSWALK WITH 5' SPACE | 3 | EA | | |
| | Complete in Place, for the Sum of<br>_____<br>_____ Dollars and<br>_____ Cents per unit | | | $ | $ |
| **P29** | REFL PAV MRKG TY I & TY II (W) 24"X 8" CROSSWALK WITH 4' SPACE | 15 | EA | | |
| | Complete in Place, for the Sum of<br>_____<br>_____ Dollars and<br>_____ Cents per unit | | | $ | $ |
| **P30** | REFL PAV MRKG TY I (W) 24" TRIANGLE | 21 | EA | | |
| | Complete in Place, for the Sum of<br>_____<br>_____ Dollars and<br>_____ Cents per unit | | | $ | $ |
| **P31** | REMOVE AND RELOCATE EX GATE | 1 | EA | | |
| | Complete in Place, for the Sum of<br>_____<br>_____ Dollars and<br>_____ Cents per unit | | | $ | $ |
| **P32** | ONCOR DUCT CROSSING COORDINATION | 1 | LS | | |
| | Complete in Place, for the Sum of<br>_____<br>_____ Dollars and<br>_____ Cents per unit | | | $ | $ |

**TOTAL AMOUNT BID-BASE BID - STREET IMPROVEMENTS**

_____
(Total Amount Bid, Numerical Value)

_____ Dollars
and _____ Cents

***The Owner reserves the right to delete any bid items or portions thereof. If the Owner elects to delete any portions of the PROJECT from the contract, then the contract can be awarded on that basis.**

| Item No. | Name of Pay Item with Unit Price in Words | Est. Quantity | Unit | Unit Bid Price | Amount Bid |
|---|---|---|---|---|---|
| **BRIDGE OVER FARMERS BRANCH CREEK** | | | | | |
| **B1** | FLOWABLE BACKFILL | 443 | CY | | |
| | Complete in Place, for the Sum of<br>_____ Dollars and<br>_____ Cents per unit | | | $ | $ |
| **B2** | DRILL SHAFT (18 IN) | 148 | LF | | |
| | Complete in Place, for the Sum of<br>_____ Dollars and<br>_____ Cents per unit | | | $ | $ |
| **B3** | DRILL SHAFT (36 IN) | 296 | LF | | |
| | Complete in Place, for the Sum of<br>_____ Dollars and<br>_____ Cents per unit | | | $ | $ |
| **B4** | CL C CONC (ABUT) (HPC) | 100 | CY | | |
| | Complete in Place, for the Sum of<br>_____ Dollars and<br>_____ Cents per unit | | | $ | $ |
| **B5** | REINF CONC SLAB (HPC) | 2,648 | SF | | |
| | Complete in Place, for the Sum of<br>_____ Dollars and<br>_____ Cents per unit | | | $ | $ |
| 1 **B6** | BRIDGE SIDEWALK (HPC) | 980 | SF | | |
| | Complete in Place, for the Sum of<br>_____ Dollars and<br>_____ Cents per unit | | | $ | $ |
| **B7** | APPROACH SLAB (HPC) | 83 | CY | | |
| | Complete in Place, for the Sum of<br>_____ Dollars and<br>_____ Cents per unit | | | $ | $ |
| **B8** | PRESTR CONC I-GIRDER (TX40) | 329 | LF | | |
| | Complete in Place, for the Sum of<br>_____ Dollars and<br>_____ Cents per unit | | | $ | $ |
| **B9** | RIPRAP (CONC) (CL B) (RR8&RR9) | 76 | CY | | |
| | Complete in Place, for the Sum of<br>_____ Dollars and<br>_____ Cents per unit | | | $ | $ |
| **B10** | RIPRAP (STONE PROTECTION) (24 IN) | 1,470 | CY | | |
| | Complete in Place, for the Sum of<br>_____ Dollars and<br>_____ Cents per unit | | | $ | $ |
| **B11** | ELASTOMERIC BEARING (LAMINATED) | 8 | EA | | |
| | Complete in Place, for the Sum of<br>_____ Dollars and<br>_____ Cents per unit | | | $ | $ |
| **B12** | STR STEEL (MISCELLANEOUS BRIDGE) (BS-EJCP) | 186 | LB | | |
| | Complete in Place, for the Sum of<br>_____ Dollars and<br>_____ Cents per unit | | | $ | $ |

| Item No. | Name of Pay Item with Unit Price in Words | Est. Quantity | Unit | Unit Bid Price | Amount Bid |
|---|---|---|---|---|---|
| **B13** | RAIL (TY C221) (HPC) | 238 | LF | | |
| | Complete in Place, for the Sum of<br>_____ Dollars and<br>_____ Cents per unit | | | $ | $ |
| **B14** | SEALED EXPANSION JOINT (4 IN) (SEJ - M) | 51 | LF | | |
| | Complete in Place, for the Sum of<br>_____ Dollars and<br>_____ Cents per unit | | | $ | $ |
| **B15** | MTL BEAM GD FEN TRANS (THRIE-BEAM) | 3 | EA | | |
| | Complete in Place, for the Sum of<br>_____ Dollars and<br>_____ Cents per unit | | | $ | $ |
| **B16** | TERMINAL ANCHOR SECTION | 3 | EA | | |
| | Complete in Place, for the Sum of<br>_____ Dollars and<br>_____ Cents per unit | | | $ | $ |

**TOTAL AMOUNT BID-BRIDGE OVER FARMERS BRANCH CREEK**

_____
(Total Amount Bid, Numerical Value)

_____ Dollars
and _____ Cents

***The Owner reserves the right to delete any bid items or portions thereof. If the Owner elects to delete any portions of the PROJECT from the contract, then the contract can be awarded on that basis.**

| Item No. | Name of Pay Item with Unit Price in Words | Est. Quantity | Unit | Unit Bid Price | Amount Bid |
|---|---|---|---|---|---|
| **BASE BID - STORM SYSTEM IMPROVEMENTS** | | | | | |
| **D1** | 18" RCP CLASS III | 490 | LF | | |
| | Complete in Place, for the Sum of<br>Dollars and<br>Cents per unit | | | $ | $ |
| **D2** | 24" RCP CLASS III | 285 | LF | | |
| | Complete in Place, for the Sum of<br>Dollars and<br>Cents per unit | | | $ | $ |
| **D3** | 54" RCP CLASS III | 95 | LF | | |
| | Complete in Place, for the Sum of<br>Dollars and<br>Cents per unit | | | $ | $ |
| **D4** | 6' CURB INLET | 4 | EA | | |
| | Complete in Place, for the Sum of<br>Dollars and<br>Cents per unit | | | $ | $ |
| **D5** | CONCRETE HEADWALL (CHFW-0) | 3 | EA | | |
| | Complete in Place, for the Sum of<br>Dollars and<br>Cents per unit | | | $ | $ |
| **D6** | 18" RCP 2:1 SET TY II HEADWALL | 1 | EA | | |
| | Complete in Place, for the Sum of<br>Dollars and<br>Cents per unit | | | $ | $ |
| **D7** | 18" RCP 6:1 SET TY II HEADWALL | 4 | EA | | |
| | Complete in Place, for the Sum of<br>Dollars and<br>Cents per unit | | | $ | $ |
| **D8** | 24" RCP 6:1 SET TY II HEADWALL | 4 | EA | | |
| | Complete in Place, for the Sum of<br>Dollars and<br>Cents per unit | | | $ | $ |
| **D9** | RIPRAP (STONE PROTECTION) (12 IN) (CHFW-0 HEADWALL) | 12 | CY | | |
| | Complete in Place, for the Sum of<br>Dollars and<br>Cents per unit | | | $ | $ |
| **D10** | TRENCH EXCAVATION PROTECTION (STORM SYSTEM) | 870 | LF | | |
| | Complete in Place, for the Sum of<br>Dollars and<br>Cents per unit | | | $ | $ |

2

**TOTAL AMOUNT BID-BASE BID - STORM SYSTEM IMPROVEMENTS**

$ -

(Total Amount Bid, Numerical Value)

Dollars

and Cents

***The Owner reserves the right to delete any bid items or portions thereof. If the Owner elects to delete any portions of the PROJECT from the contract, then the contract can be awarded on that basis.**

| Item No. | Name of Pay Item with Unit Price in Words | Est. Quantity | Unit | Unit Bid Price | Amount Bid |
|---|---|---|---|---|---|
| **BASE BID - DETENTION POND IMPROVEMENTS** | | | | | |
| **H1** | UNCLASSIFIED POND AND CREEK EXCAVATION | 1 | LS | | |
| | Complete in Place, for the Sum of<br>_____ Dollars and<br>_____ Cents per unit | | | $ | $ |
| **H2** | BORROW AND SPOIL (DETENTION POND AND CREEK) | 1 | LS | | |
| | Complete in Place, for the Sum of<br>_____ Dollars and<br>_____ Cents per unit | | | $ | $ |
| **H3** | BORROW AND SPOIL (DETENTION POND AND CREEK) (SELECT FILL) | 1 | LS | | |
| | Complete in Place, for the Sum of<br>_____ Dollars and<br>_____ Cents per unit | | | $ | $ |
| 1 **H4** | RIPRAP (CONC) (CL B) (RR8&RR9) (DETENTION POND) | 6 | CY | | |
| | Complete in Place, for the Sum of<br>_____ Dollars and<br>_____ Cents per unit | | | $ | $ |
| **H5** | RIPRAP (STONE PROTECTION) (24 IN) (DETENTION POND) | 910 | CY | | |
| | Complete in Place, for the Sum of<br>_____ Dollars and<br>_____ Cents per unit | | | $ | $ |
| **H6** | CONCRETE OUTFALL STUCTURE | 7 | CY | | |
| | Complete in Place, for the Sum of<br>_____ Dollars and<br>_____ Cents per unit | | | $ | $ |

**TOTAL AMOUNT BID-BASE BID - DETENTION POND IMPROVEMENTS**

$ -

(Total Amount Bid, Numerical Value)

_____ Dollars

and _____ Cents

***The Owner reserves the right to delete any bid items or portions thereof. If the Owner elects to delete any portions of the PROJECT from the contract, then the contract can be awarded on that basis.**

| Item No. | Name of Pay Item with Unit Price in Words | Est. Quantity | Unit | Unit Bid Price | Amount Bid |
|---|---|---|---|---|---|
| **BASE BID - LANDSCAPE IMPROVEMENTS AND EROSION CONTROL** | | | | | |
| **L1** | HYDRAULIC MULCHING WITH 4" TOPSOIL | 45,490 | SY | | |
| | Complete in Place, for the Sum of<br>_____ Dollars and<br>_____ Cents per unit | | | $ | $ |
| **L2** | SEDIMENT CONTROL FENCE (INSTALL/MAINTAIN/REMOVE) | 7,475 | LF | | |
| | Complete in Place, for the Sum of<br>_____ Dollars and<br>_____ Cents per unit | | | $ | $ |
| **L3** | STABILIZED CONSTRUCTION EXIT/ENTRANCE | 180 | SY | | |
| | Complete in Place, for the Sum of<br>_____ Dollars and<br>_____ Cents per unit | | | $ | $ |
| **L4** | INLET PROTECTION (INSTALL/MAINTAIN/REMOVE) | 4 | EA | | |
| | Complete in Place, for the Sum of<br>_____ Dollars and<br>_____ Cents per unit | | | $ | $ |
| **L5** | ROCK CHECK DAM | 65 | LF | | |
| | Complete in Place, for the Sum of<br>_____ Dollars and<br>_____ Cents per unit | | | $ | $ |
| **L6** | STORM WATER POLLUTION PREVENTION PLAN | 1 | LS | | |
| | Complete in Place, for the Sum of<br>_____ Dollars and<br>_____ Cents per unit | | | $ | $ |

**TOTAL AMOUNT BID-TOTAL AMOUNT BID-BASE BID - DETENTION POND IMPROVEMENTS**

$ _____ -

(Total Amount Bid, Numerical Value)

_____ Dollars

and _____ Cents

***The Owner reserves the right to delete any bid items or portions thereof. If the Owner elects to delete any portions of the PROJECT from the contract, then the contract can be awarded on that basis.**

| Item No. | Name of Pay Item with Unit Price in Words | Est. Quantity | Unit | Unit Bid Price | Amount Bid |
|---|---|---|---|---|---|
| **BASE BID - WATER IMPROVEMENTS** | | | | | |
| **W1** | 8" PVC WATER LINE | 355 | LF | | |
| | Complete in Place, for the Sum of<br>_____ Dollars and<br>_____ Cents per unit | | | $ | $ |
| **W2** | 12" PVC WATER LINE | 575 | LF | | |
| | Complete in Place, for the Sum of<br>_____ Dollars and<br>_____ Cents per unit | | | $ | $ |
| **W3** | 8 " GATE VALVE | 2 | EA | | |
| | Complete in Place, for the Sum of<br>_____ Dollars and<br>_____ Cents per unit | | | $ | $ |
| **W4** | 12" GATE VALVE | 2 | EA | | |
| | Complete in Place, for the Sum of<br>_____ Dollars and<br>_____ Cents per unit | | | $ | $ |
| **W5** | FIRE HYDRANT ASSEMBLY | 1 | EA | | |
| | Complete in Place, for the Sum of<br>_____ Dollars and<br>_____ Cents per unit | | | $ | $ |
| **W6** | REMOVE EXISTING 12" AC WATER LINE | 8 | LF | | |
| | Complete in Place, for the Sum of<br>_____ Dollars and<br>_____ Cents per unit | | | $ | $ |
| **W7** | ABANDON EXISTING ASBESTOS PIPE IN PLACE | 500 | LF | | |
| | Complete in Place, for the Sum of<br>_____ Dollars and<br>_____ Cents per unit | | | $ | $ |
| **W8** | WATER TESTING | 1 | LS | | |
| | Complete in Place, for the Sum of<br>_____ Dollars and<br>_____ Cents per unit | | | $ | $ |
| **W9** | TRENCH EXCAVATION PROTECTION (WATER SYSTEM) | 930 | LF | | |
| | Complete in Place, for the Sum of<br>_____ Dollars and<br>_____ Cents per unit | | | $ | $ |

**TOTAL AMOUNT BID-BASE BID - WATER IMPROVEMENTS** $ _____ -

(Total Amount Bid, Numerical Value)

_____ Dollars

and _____ Cents

***The Owner reserves the right to delete any bid items or portions thereof. If the Owner elects to delete any portions of the PROJECT from the contract, then the contract can be awarded on that basis.**

| Item No. | Name of Pay Item with Unit Price in Words | Est. Quantity | Unit | Unit Bid Price | Amount Bid |
|---|---|---|---|---|---|
| **BASE BID - SANITARY SEWER IMPROVEMENTS** | | | | | |
| **SS1** | 8" PVC SSWR LINE | 315 | LF | | |
| | Complete in Place, for the Sum of<br>_____ Dollars and<br>_____ Cents per unit | | | $ | $ |
| **SS2** | 4' STANDARD MANHOLE | 1 | EA | | |
| | Complete in Place, for the Sum of<br>_____ Dollars and<br>_____ Cents per unit | | | $ | $ |
| **SS3** | CEMENT STABILIZED SAND ENCASEMENT (MIN. 10% CEMENT/CY) | 20 | LF | | |
| | Complete in Place, for the Sum of<br>_____ Dollars and<br>_____ Cents per unit | | | $ | $ |
| **SS4** | SANITARY SEWER CCTV INSPECTION | 1 | LS | | |
| | Complete in Place, for the Sum of<br>_____ Dollars and<br>_____ Cents per unit | | | $ | $ |
| **SS5** | TRENCH EXCAVATION PROTECTION (SANITARY SEWER IMPROVEMENTS) | 315 | LF | | |
| | Complete in Place, for the Sum of<br>_____ Dollars and<br>_____ Cents per unit | | | $ | $ |

**TOTAL AMOUNT BID-BASE BID - SANITARY SEWER IMPROVEMENTS**

$ _____ -

(Total Amount Bid, Numerical Value)

_____ Dollars

and _____ Cents

***The Owner reserves the right to delete any bid items or portions thereof. If the Owner elects to delete any portions of the PROJECT from the contract, then the contract can be awarded on that basis.**

| Item No. | Name of Pay Item with Unit Price in Words | Est. Quantity | Unit | Unit Bid Price | Amount Bid |
|---|---|---|---|---|---|
| **BASE BID - OWNER'S CONTINGENCY** | | | | | |
| **O1** | OWNER'S CONTINGENCY | 1 | LS | | |
| | Complete in Place, for the Sum of<br>Eighty Five Thousand Dollars and<br>Zero Cents per unit | | | $ 85,000.00 | $ 85,000.00 |

**TOTAL AMOUNT BID-BASE BID - OWNER'S CONTINGENCY**

$ 85,000.00

(Total Amount Bid, Numerical Value)

Dollars

and Cents

***The Owner reserves the right to delete any bid items or portions thereof. If the Owner elects to delete any portions of the PROJECT from the contract, then the contract can be awarded on that basis.**

**TOTAL AMOUNT OF BASE BID (ITEMS P1 THROUGH O1)**

$ _____ -

(Total Amount Bid, Numerical Value)

_____ Dollars

and _____ Cents

(Total Amount Bid in Words)

***The Owner reserves the right to delete any bid items or portions thereof. If the Owner elects to delete any portions of the PROJECT from the contract, then the contract can be awarded on that basis.**

NOTES:

1. All items, labor, materials, equipment, facilities, incidentals and work required for construction of the project are to be provided and installed by the Contractor as part of the project and payment for the cost of such shall be included in the price bid for the construction of the project.

2. Prices must be shown in words and figures for each item listed in the Proposal. In the event of discrepancy, the words shall control.

3. Materials, which are "tax exempt", are those items which are physically incorporated into the facilities constructed for the Town of Addison, as set forth in the Special Provisions. Materials include, but are not limited to purchased items such as water pipe, sanitary sewer pipe, storm drain pipe, etc.

   Services, which are "not tax exempt", are those items which are used by the Contractor but are not physically incorporated into the Town of Addison's facility and/or items which are consumed by construction, as set forth in the Special Provisions. Services include, but are not limited to, items such as supplies, tools, skill and labor, the purchase, rental or lease of equipment, etc.

_____

Name of Person Signing Bid

_____

Signature of Person Signing Bid

_____

Address

_____

Telephone No. Fax No.

_____

T.I.N. (Tax Identification or Employer's Number)

If BIDDER is:

**AN INDIVIDUAL**

By _____ (Seal)
(Individual's Name)

doing business as _____

Business address: _____

_____

_____

Phone No. _____

---

**A PARTNERSHIP**

By _____ (Seal)
(Firm Name)

_____
(General Partner)

doing business as _____

Business address: _____

_____

_____

Phone No. _____

**A CORPORATION**

By _____
(Corporation Name)

_____
(State of Incorporation)

By _____
(Name of Person Authorized to Sign)

_____
(Title)

(Corporate Seal)

Attest _____
(Secretary)

Business address: _____

_____

_____

Phone No. _____

---

**A JOINT VENTURE**

By _____
(Name)

_____
(Address)

By _____
(Name)

_____
(Address)

(Each joint venture must sign. The manner of signing for each individual, partnership and corporation that is a party to the joint venture should be in the manner indicated above.)

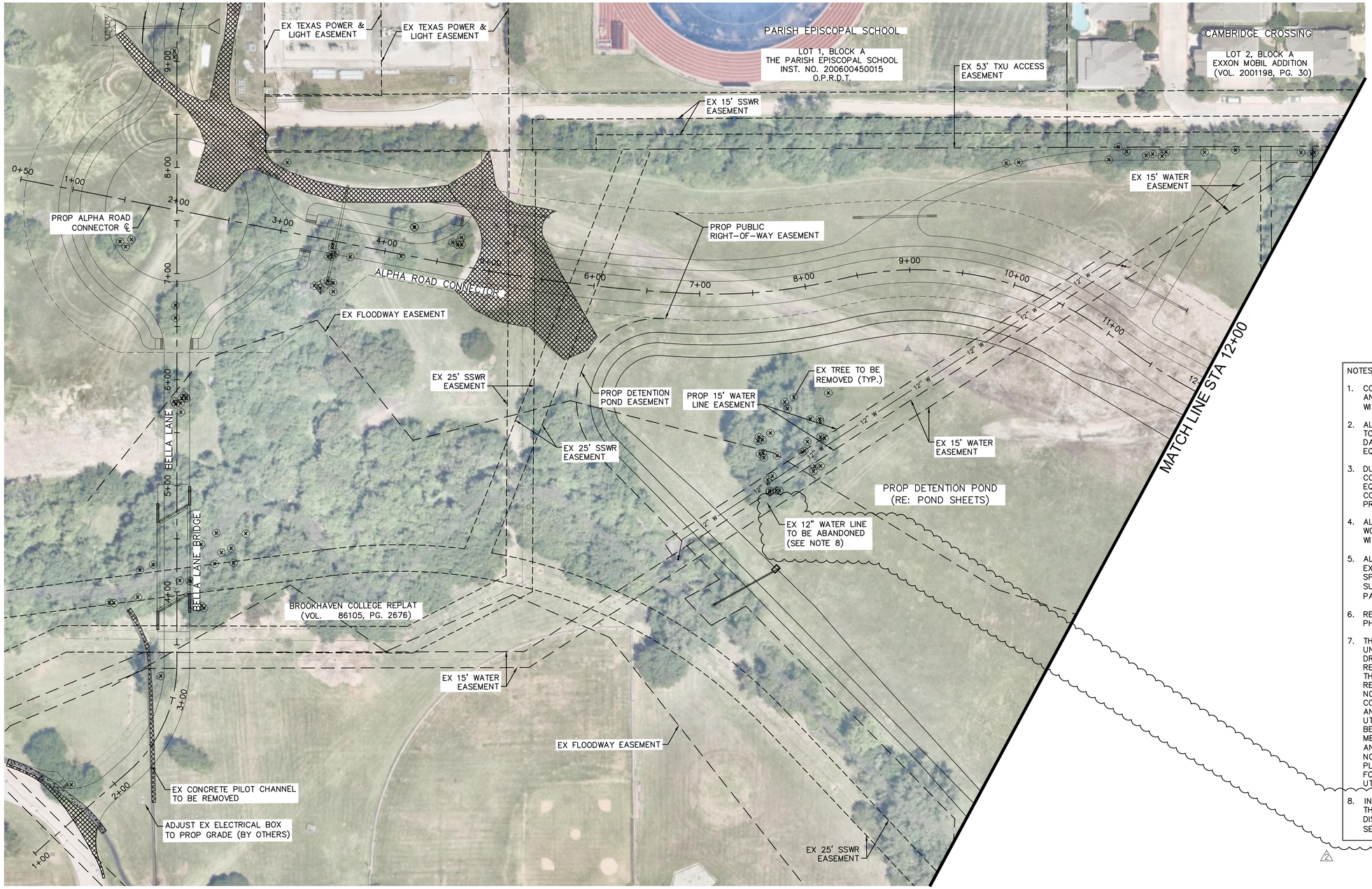


NORTH

GRAPHIC SCALE IN FEET
0 25 50 100

LEGEND

- EX ROW
- 12" W — EX 12" WATER
- 8" SS — EX 8" SANITARY SEWER
- 15" SS — EX 8" SANITARY SEWER
- 18" SS — EX 18" SANITARY SEWER
- 36" SS — EX 18" SANITARY SEWER
- EX STORM DRAIN
- UGE — EX UNDERGROUND ELECTRIC
- G — EX GAS
- OHE — EX OVERHEAD ELECTRIC
- EX TREE TO REMAIN
- EX TREE TO BE REMOVED
- CONCRETE PAVEMENT, GRAVEL, DIRT AND ASPHALT TO BE REMOVED
- SIDEWALK AND RAMPS TO BE REMOVED

NOTES:

1. CONTRACTOR IS RESPONSIBLE FOR LOCATING AND RESTORING ALL IRRIGATION FACILITIES WITHIN PROJECT LIMITS (NO SEPARATE PAY).
2. ALL LANDSCAPING AND TREES NOT INDICATED TO BE REMOVED SHALL BE PROTECTED. IF DAMAGED, CONTRACTOR SHALL RESTORE TO EQUAL OR BETTER CONDITION.
3. DUE TO TREE LIMB HEIGHT LIMITATIONS, CONTRACTOR SHALL INSPECT AREA FOR EQUIPMENT CLEARANCE. IN THE EVENT OF A CONFLICT, CONTRACTOR SHALL NOTIFY TOWN PRIOR TO CONSTRUCTION.
4. ALL TREE ROOTS IN CONFLICT WITH PROPOSED WORK SHALL BE STRAIGHT CUT AND TREATED WITH PRUNING PAINT (NO SEPARATE PAY).
5. ALL DAMAGE AND/OR REPLACEMENT TO EXISTING DECORATIVE WALK WAYS NOT SPECIFICALLY NOTED IN THE PLANS SHALL BE SUBSIDIARY TO ANY BID ITEM (NO SEPARATE PAY).
6. REFER TO TRAFFIC CONTROL SHEETS FOR PHASING.
7. THE EXISTENCE AND LOCATIONS OF ALL UNDERGROUND UTILITIES SHOWN ON THE DRAWINGS WERE OBTAINED FROM AVAILABLE RECORDS AND ARE APPROXIMATE. NEITHER THE OWNER NOR THE ENGINEER ASSUMES ANY RESPONSIBILITY FOR UTILITIES NOT SHOWN OR NOT IN THE LOCATION SHOWN. THE CONTRACTOR SHALL DETERMINE THE DEPTH AND LOCATION OF EXISTING UNDERGROUND UTILITIES PRIOR TO EXCAVATION AND SHALL BE REQUIRED TO TAKE ANY PRECAUTIONARY MEASURES TO PROTECT ALL LINES SHOWN AND/ OR ANY OTHER UNDERGROUND UTILITIES NOT OF RECORD OR NOT SHOWN ON THE PLANS. CONTRACTOR SHALL BE RESPONSIBLE FOR CONTACTING ALL FRANCHISE AND TOWN UTILITIES PRIOR TO CONSTRUCTION.
8. IN THE EVENT THE CONTRACTOR REMOVES THE WATER LINE THE MATERIAL SHALL BE DISPOSED OF PROPERLY OFFSITE (NO SEPARATE PAY)

CAUTION!
EXISTING UNDERGROUND UTILITIES IN THE AREA. CONTRACTOR IS RESPONSIBLE FOR DETERMINING THE HORIZONTAL AND VERTICAL LOCATION OF ALL UTILITIES PRIOR TO CONSTRUCTION. CONTRACTOR SHALL BE RESPONSIBLE FOR ANY REPAIRS TO EXISTING UTILITIES DUE TO DAMAGE INCURRED DURING CONSTRUCTION. CONTRACTOR SHALL IMMEDIATELY NOTIFY THE ENGINEER OF ANY DISCREPANCIES ON THE PLANS.

811 Know what's below. Call before you dig.

| No. | REVISIONS | DATE | BY |
|---|---|---|---|
| 1 | ADDENDUM #2 | 10/18/21 | CDS |

PROJECT NO. 2021-01C/ BID NO. 21-69

Kimley»Horn
2201 WEST ROYAL LANE, SUITE 275, IRVING, TX 75063
PHONE: 214-420-5600
WWW.KIMLEY-HORN.COM
© 2021 KIMLEY-HORN AND ASSOCIATES, INC.
TEXAS REGISTERED ENGINEERING FIRM #F-928

10/18/2021
STATE OF TEXAS
RYAN DELMOTTE
114242
LICENSED
PROFESSIONAL ENGINEER

| | |
|---|---|
| KHA PROJECT | 063543031 |
| DATE | 10/18/2021 |
| SCALE | AS SHOWN |
| DESIGNED BY | RMD |
| DRAWN BY | CDS |
| CHECKED BY | LNA |

**TOWN OF ADDISON**
ALPHA ROAD CONN.
FROM FARMERS BRANCH
CREEK TO ALPHA ROAD

REMOVAL PLAN
ALPHA ROAD
CONNECTOR
SHEET 1 OF 2

SHEET NUMBER
C1.03

Plotted By: Staudolt, Cody October 15, 2021 11:08:18am K:\VAC_Civil\063543031_Addison_Alpha_Road_Connector\VCADD\PlanSheets\Removal Plan.dwg
This document, together with the concepts and designs presented herein, as an instrument of service, is intended only for the specific purpose and client for which it was prepared. Reuse of and improper reliance on this document without written authorization and adaptation by Kimley-Horn and Associates, Inc. shall be without liability to Kimley-Horn and Associates, Inc.

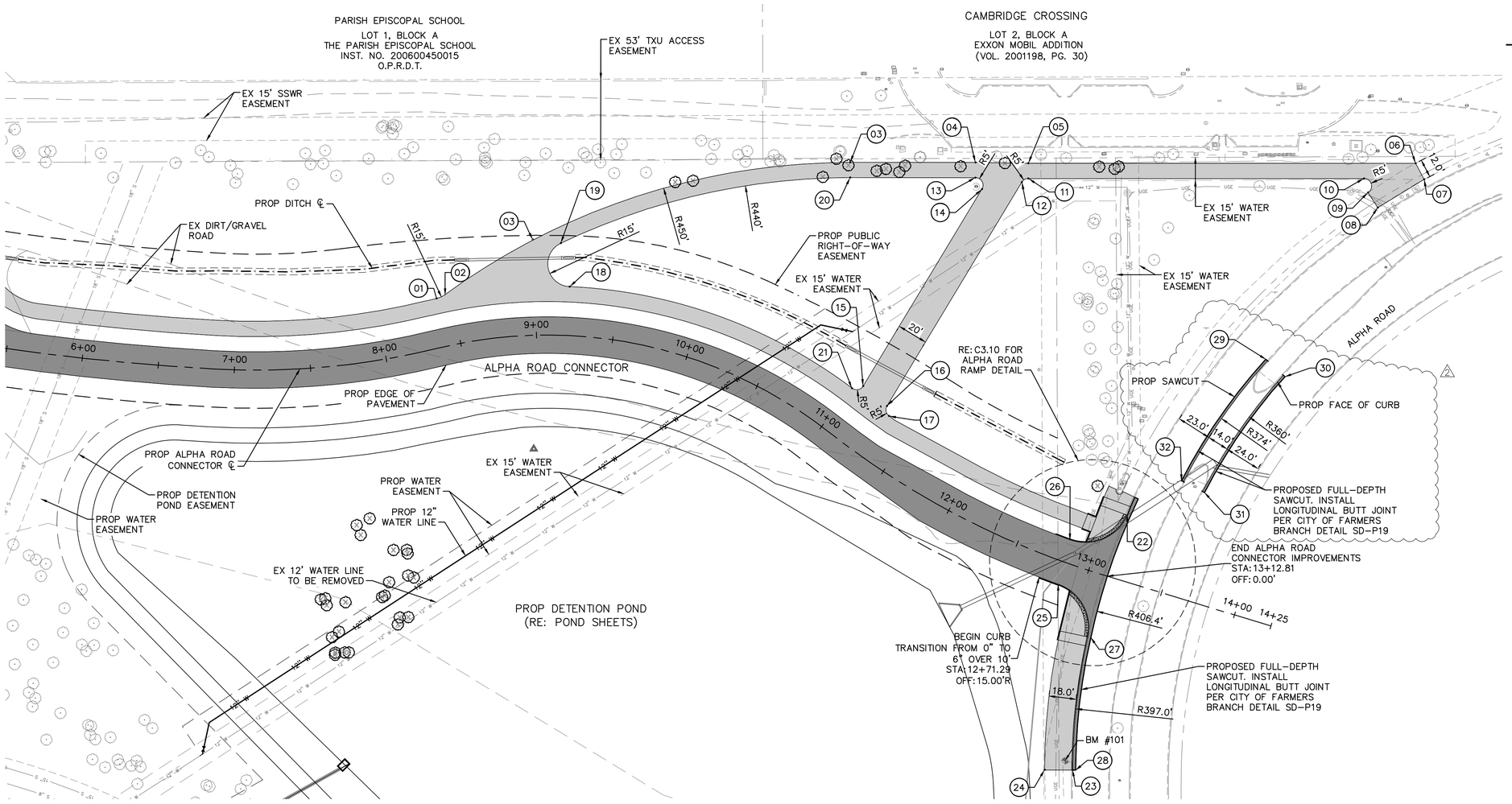


NORTH

GRAPHIC SCALE IN FEET
0 20 40 80

## LEGEND

- EX ROW
- EX EASEMENT
- PROP EASEMENT
- PROP STORM DRAIN
- PROP DITCH ℄
- PROP PAVEMENT
- PROP SIDEWALK
- PROP ASPHALT
- EX TREE
- EX TREE TO BE REMOVED

## NOTES

1. CONTRACTOR IS RESPONSIBLE FOR RELOCATION OF ANY SIGNS AND COORDINATION WITH THE CITY ON ANY NECESSARY MODIFICATIONS.
2. CONTRACTOR IS RESPONSIBLE FOR LOCATING ALL IRRIGATION FACILITIES WITHIN LOC.
3. THE EXISTENCE AND LOCATIONS OF ALL UNDERGROUND UTILITIES SHOWN ON THE DRAWINGS WERE OBTAINED FROM AVAILABLE RECORDS AND ARE APPROXIMATE. NEITHER THE OWNER NOR THE ENGINEER ASSUMES ANY RESPONSIBILITY FOR UTILITIES NOT SHOWN OR NOT IN THE LOCATION SHOWN. THE CONTRACTOR SHALL DETERMINE THE DEPTH AND LOCATION OF EXISTING UNDERGROUND UTILITIES PRIOR TO EXCAVATION AND SHALL BE REQUIRED TO TAKE ANY PRECAUTIONARY MEASURES TO PROTECT ALL LINES SHOWN AND/ OR ANY OTHER UNDERGROUND UTILITIES NOT OF RECORD OR NOT SHOWN ON THE PLANS. CONTRACTOR SHALL BE RESPONSIBLE FOR CONTACTING ALL FRANCHISE AND CITY UTILITIES PRIOR TO CONSTRUCTION.
4. ELEV ARE TOP OF PAVEMENT UNLESS OTHERWISE NOTED.

| | |
|---|---|
| EX | EXISTING |
| PROP | PROPOSED |
| STA | STATION |
| EL | ELEVATION |
| PI | POINT OF HORIZONTAL INFLECTION |
| PC | POINT OF HORIZONTAL CURVATURE |
| PT | POINT OF HORIZONTAL TANGENCY |
| PRC | POINT OF HORIZONTAL REVERSE CURVATURE |
| PVI | POINT OF VERTICAL INFLECTION |
| AD | ALGEBRAIC DIFFERENCE IN GRADES |
| VC | VERTICAL CURVE |
| BVCS/ EVCS | BEGIN/END VERTICAL CURVE STATION |
| BVCE/ EVCE | BEGIN/END VERTICAL CURVE ELEVATION |
| PGL | PROPOSED GRADE LINE |
| TCE | TEMPORARY CONSTRUCTION EASEMENT |
| TP | TOP OF PAVEMENT |

| POINT NO. | DESCRIPTION | ALIGNMENT | STATION | OFFSET | ELEV |
|---|---|---|---|---|---|
| 01 | PRC | ALPHA ROAD CONN | 8+40.94 | 32.00' L | 568.29' |
| 02 | PRC | ALPHA ROAD CONN | 8+46.33 | 33.30' L | 568.21' |
| 03 | PT | ALPHA ROAD CONN | 10+41.41 | 158.51' L | 569.20' |
| 04 | PI | ALPHA ROAD CONN | 10+86.01 | 199.59' L | 571.20' |
| 05 | PI | ALPHA ROAD CONN | 11+02.77 | 219.46' L | 571.30' |
| 06 | PI | ALPHA ROAD CONN | -- | -- | 576.17' |
| 07 | TIE TO EX | ALPHA ROAD CONN | -- | -- | 576.31' |
| 08 | TIE TO EX | ALPHA ROAD CONN | 14+12.10 | 282.92' L | 576.24' |
| 09 | PC | ALPHA ROAD CONN | 14+03.07 | 290.55' L | 576.12' |
| 10 | PT | ALPHA ROAD CONN | 13+97.78 | 298.55' L | 575.68' |
| 11 | PC | ALPHA ROAD CONN | 11+06.33 | 211.55' L | 571.11' |
| 12 | PT | ALPHA ROAD CONN | 11+05.22 | 207.01' L | 571.00' |
| 13 | PC | ALPHA ROAD CONN | 10+89.44 | 191.35' L | 570.95' |
| 14 | PT | ALPHA ROAD CONN | 10+94.27 | 187.64' L | 570.85' |
| 15 | PC | ALPHA ROAD CONN | 11+05.24 | 37.55' L | 569.90' |
| 16 | PC | ALPHA ROAD CONN | 11+26.67 | 36.60' L | 570.62' |
| 17 | PC | ALPHA ROAD CONN | 11+32.01 | 32.00' L | 570.96' |
| 18 | PC | ALPHA ROAD CONN | 9+20.23 | 32.00' L | 567.49' |
| 19 | PCC | ALPHA ROAD CONN | 9+14.35 | 60.30' L | 565.89' |
| 20 | PT | ALPHA ROAD CONN | 10+44.30 | 149.52' L | 569.00' |

| POINT NO. | DESCRIPTION | ALIGNMENT | STATION | OFFSET | ELEV |
|---|---|---|---|---|---|
| 21 | PRC | ALPHA ROAD CONN | 11+00.82 | 32.00' L | 569.87' |
| 22 | PT | ALPHA ROAD CONN | 13+13.70 | 42.13' L | 574.52' |
| 23 | TIE TO EX | ALPHA ROAD CONN | 13+28.08 | 128.20' R | 573.69' |
| 24 | TIE TO EX | ALPHA ROAD CONN | 13+10.50 | 133.45' R | 574.29' |
| 25 | PI | ALPHA ROAD CONN | 12+84.35 | 15.00' R | 574.34' |
| 26 | PT | ALPHA ROAD CONN | 12+81.60 | 15.00' L | 574.92' |
| 27 | PCC-SC | ALPHA ROAD CONN | 13+14.18 | 41.69' R | 574.12' |
| 28 | TIE TO EX | ALPHA ROAD CONN | 13+30.01 | 127.68' R | 573.66' |

| POINT NO. | DESCRIPTION | ALIGNMENT | STATION | OFFSET |
|---|---|---|---|---|
| 29 | PI-ME | ALPHA ROAD CONN | 13+70.76 | 166.39' L |
| 30 | PI-ME | ALPHA ROAD CONN | 13+86.14 | 159.15' L |
| 31 | PI-ME | ALPHA ROAD CONN | 13+57.85 | 71.06' L |
| 32 | PI-ME | ALPHA ROAD CONN | 13+41.13 | 74.13' L |

Know what's below.
Call before you dig.

| No. | REVISIONS | DATE | BY |
|---|---|---|---|
| 1 | ADDENDUM #2 | 10/18/21 | CDS |

PROJECT NO. 2021-01C/ BID NO. 21-69

Kimley»Horn
2201 WEST ROYAL LANE, SUITE 275, IRVING, TX 75063
PHONE: 214-420-5600
WWW.KIMLEY-HORN.COM
© 2021 KIMLEY-HORN AND ASSOCIATES, INC.
TEXAS REGISTERED ENGINEERING FIRM #F-928

10/18/2021
STATE OF TEXAS
RYAN DELMOTTE
114242
LICENSED
PROFESSIONAL ENGINEER

| | |
|---|---|
| KHA PROJECT | 063543031 |
| DATE | 10/18/2021 |
| SCALE | AS SHOWN |
| DESIGNED BY | RMD |
| DRAWN BY | CDS |
| CHECKED BY | LNA |

# TOWN OF ADDISON
ALPHA ROAD CONN.
FROM FARMERS BRANCH
CREEK TO ALPHA ROAD

PAVING
PAVING AND
SIDEWALK LAYOUT

SHEET NUMBER
C3.09

Plotted By: Shettigh, Cody October 15, 2021 11:12:39am K:\LNAC-Civil\063543031-Addison, Alpha Road Connector\CAD\Plan Sheets\Paving Plans\P-Plan.dwg
This document, together with the concepts and designs presented herein, as an instrument of service, is intended only for the specific purpose and client for which it was prepared. Reuse of and improper reliance on this document without written authorization and adaptation by Kimley-Horn and Associates, Inc. shall be without liability to Kimley-Horn and Associates, Inc.

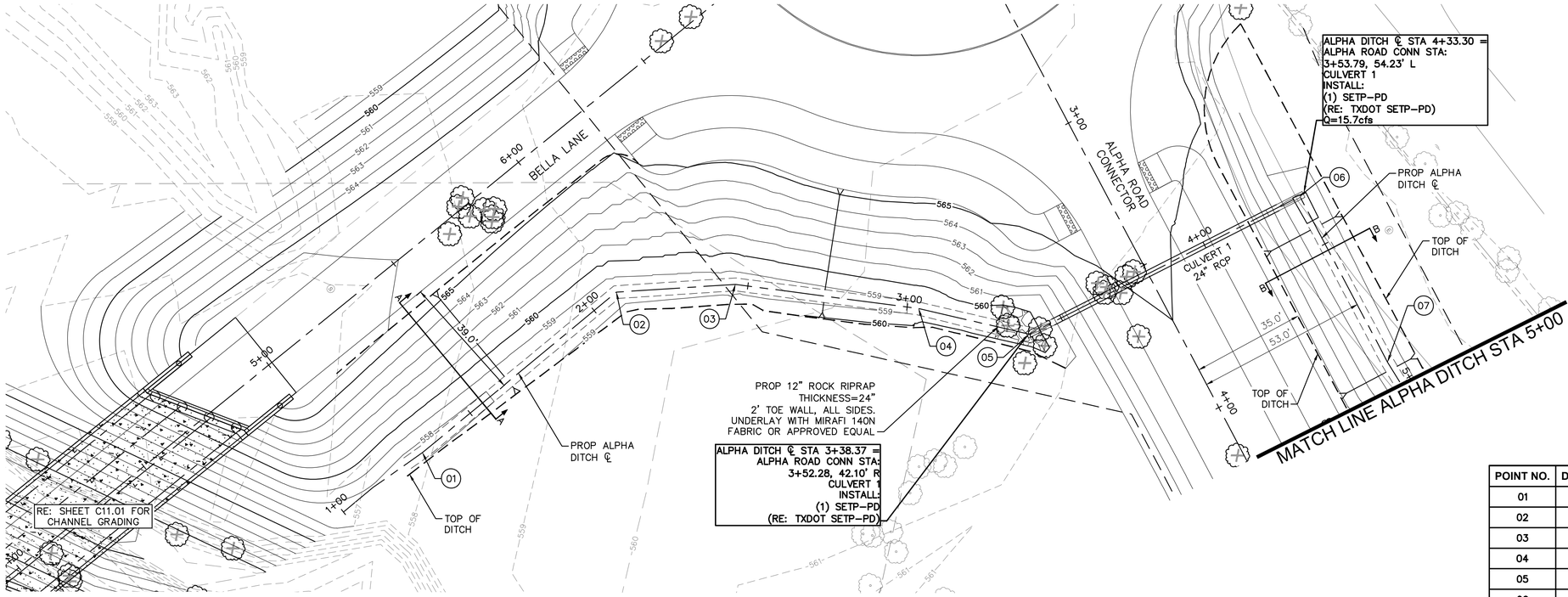


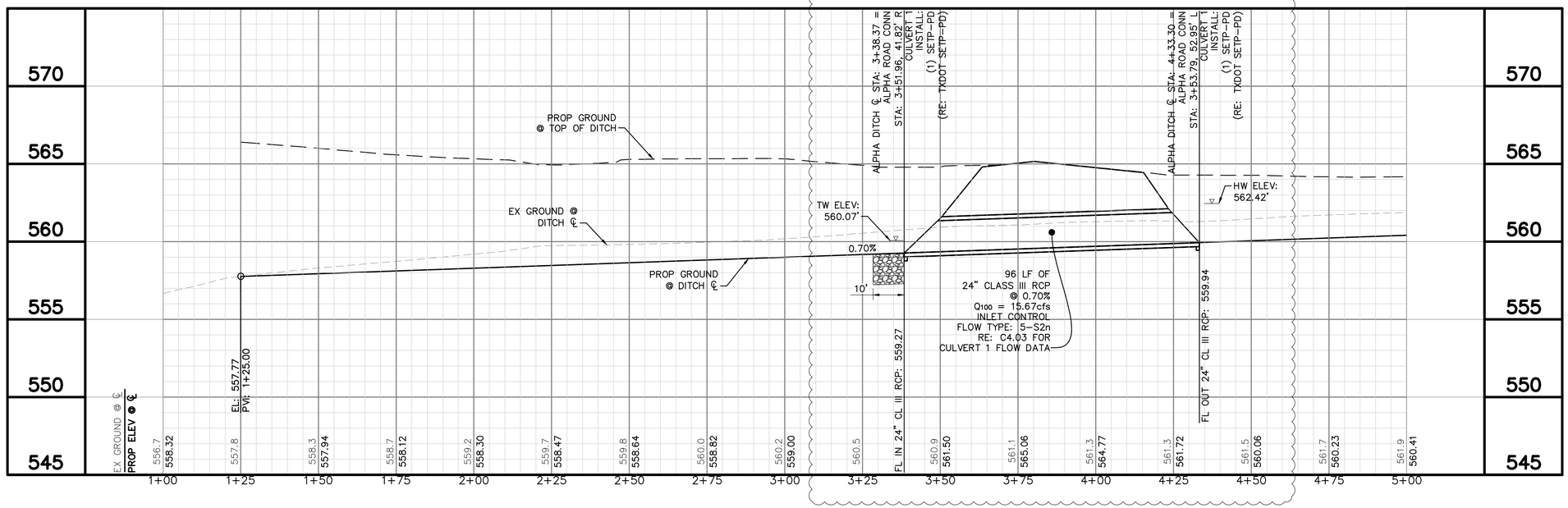


GRAPHIC SCALE IN FEET 0 10 20 40

NORTH

LEGEND

- EX ROW
- EX EASEMENT
- PROP EASEMENT
- PROP STORM DRAIN

| POINT NO. | DESCRIPTION | ALIGNMENT | STATION | OFFSET |
|---|---|---|---|---|
| 01 | PI | ALPHA ROAD CONN | 2+96.62 | 225.45' R |
| 02 | PI | ALPHA ROAD CONN | 2+80.70 | 148.85' R |
| 03 | PI | ALPHA ROAD CONN | 2+95.89 | 114.97' R |
| 04 | PI | ALPHA ROAD CONN | 3+29.14 | 68.15' R |
| 05 | PI | ALPHA ROAD CONN | 3+52.29 | 41.44' R |
| 06 | PI | ALPHA ROAD CONN | 3+53.77 | 52.95' L |
| 07 | PI | ALPHA ROAD CONN | 4+12.02 | 53.00' L |

Know what's below. Call before you dig.

| No. | REVISIONS | DATE | BY |
|---|---|---|---|
| 2 | ADDENDUM #2 | 10/18/21 | CDS |

PROJECT NO. 2021-01C/ BID NO. 21-69


Kimley»Horn
2201 WEST ROYAL LANE, SUITE 275, IRVING, TX 75063
PHONE: 214-420-5600
WWW.KIMLEY-HORN.COM


© 2021 KIMLEY-HORN AND ASSOCIATES, INC.
TEXAS REGISTERED ENGINEERING FIRM #F-928


10/18/2021

STATE OF TEXAS RYAN DELMOTTE 114242 LICENSED PROFESSIONAL ENGINEER

KHA PROJECT 063543031
DATE 10/18/2021
SCALE AS SHOWN
DESIGNED BY RMD
DRAWN BY CDS
CHECKED BY LNA

# TOWN OF ADDISON
## ALPHA ROAD CONN. FROM FARMERS BRANCH CREEK TO ALPHA ROAD

# DRAINAGE
## ALPHA DITCH BEGIN TO STA 5+00

SHEET NUMBER
C4.09


Plotted By:Shadbolt, Cody October 15, 2021 11:30:57am K:\LAC_Civil\063543031_Addison_Alpha_Road_Connector\CADD\PlanSheets\Drainage Plan&Profile.dwg
This document, together with the concepts and designs presented herein, as an instrument of service, is intended only for the specific purpose and client for which it was prepared. Reuse of and improper reliance on this document without written authorization and adaptation by Kimley-Horn and Associates, Inc. shall be without liability to Kimley-Horn and Associates, Inc.

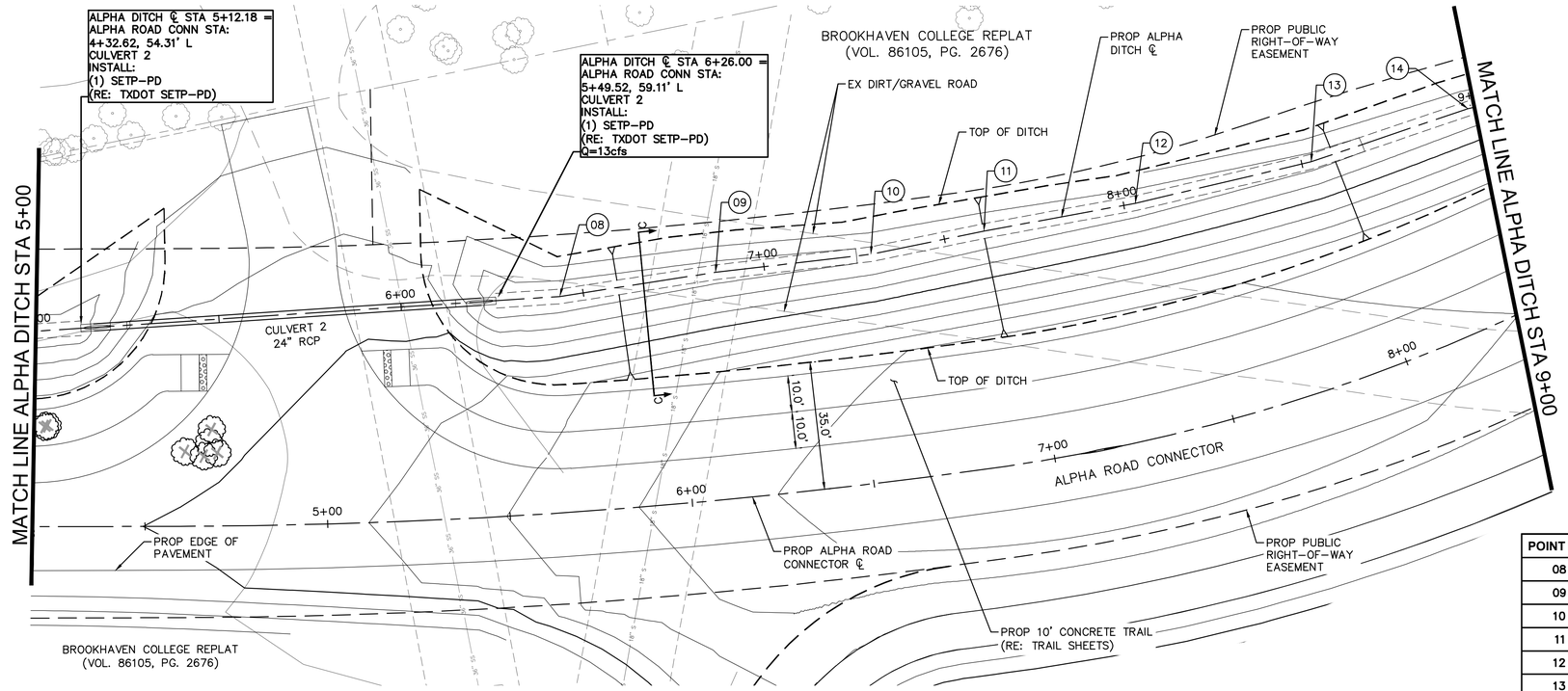


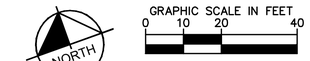


LEGEND

- EX ROW
- EX EASEMENT
- PROP EASEMENT
- PROP STORM DRAIN

| POINT NO. | DESCRIPTION | ALIGNMENT | STATION | OFFSET |
|---|---|---|---|---|
| 08 | PI | ALPHA ROAD CONN | 5+67.67 | 59.16' L |
| 09 | PI | ALPHA ROAD CONN | 6+12.38 | 62.22' L |
| 10 | PI | ALPHA ROAD CONN | 6+56.90 | 62.43' L |
| 11 | PI | ALPHA ROAD CONN | 6+90.00 | 64.58' L |
| 12 | PI | ALPHA ROAD CONN | 7+38.32 | 63.92' L |
| 13 | PI | ALPHA ROAD CONN | 7+94.70 | 60.45' L |
| 14 | PI | ALPHA ROAD CONN | 8+43.08 | 56.90' L |

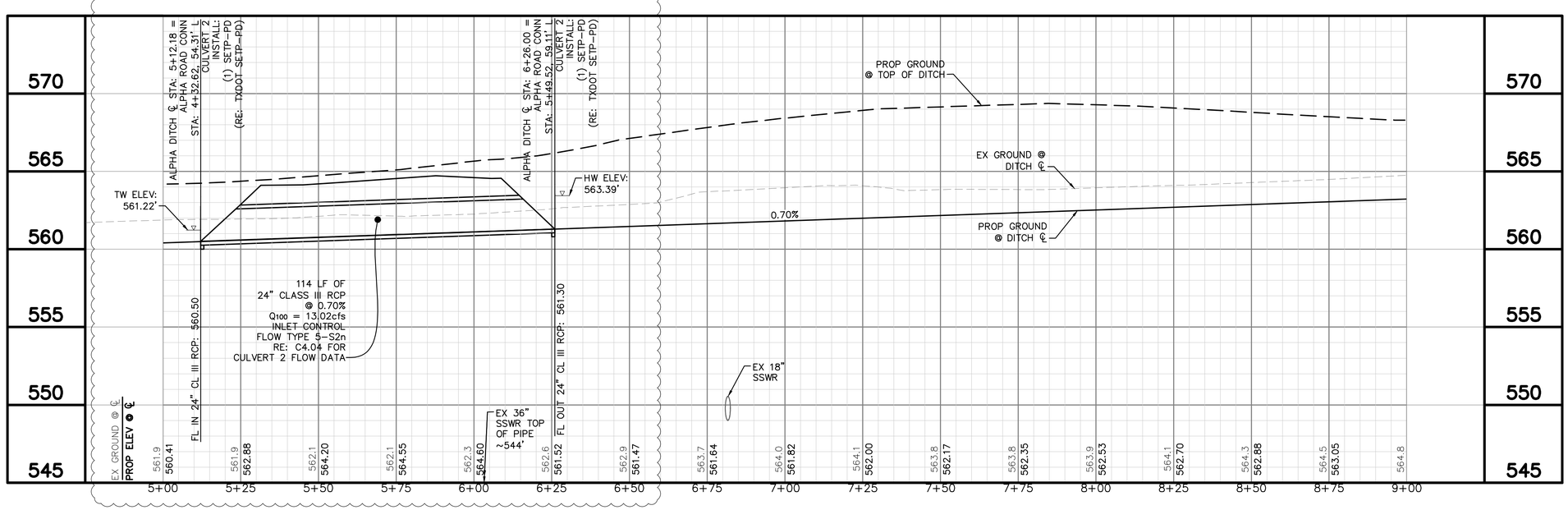


811 Know what's below. Call before you dig.

| No. | REVISIONS | DATE | BY |
|---|---|---|---|
| 2 | ADDENDUM #2 | 10/18/21 | CDS |

PROJECT NO. 2021-01C/ BID NO. 21-69


Kimley»Horn
2201 WEST ROYAL LANE, SUITE 275, IRVING, TX 75063
PHONE: 214-420-5600
WWW.KIMLEY-HORN.COM


© 2021 KIMLEY-HORN AND ASSOCIATES, INC.
TEXAS REGISTERED ENGINEERING FIRM #F-928


10/18/2021
STATE OF TEXAS
RYAN DELMOTTE
114242
LICENSED
PROFESSIONAL ENGINEER

KHA PROJECT 063543031
DATE 10/18/2021
SCALE AS SHOWN
DESIGNED BY RMD
DRAWN BY CDS
CHECKED BY LNA

# TOWN OF ADDISON
ALPHA ROAD CONN.
FROM FARMERS BRANCH
CREEK TO ALPHA ROAD

# DRAINAGE
ALPHA DITCH
STA 5+00 TO STA 9+00

SHEET NUMBER
C4.10


Plotted By:Shadbolt, Cody October 15, 2021 11:31:06am K:\LAC_Civil\063543031_Addison_Alpha_Road_Connector\CADD\PlanSheets\Drainage Plan&Profile.dwg
This document, together with the concepts and designs presented herein, as an instrument of service, is intended only for the specific purpose and client for which it was prepared. Reuse of and improper reliance on this document without written authorization and adaptation by Kimley-Horn and Associates, Inc. shall be without liability to Kimley-Horn and Associates, Inc.

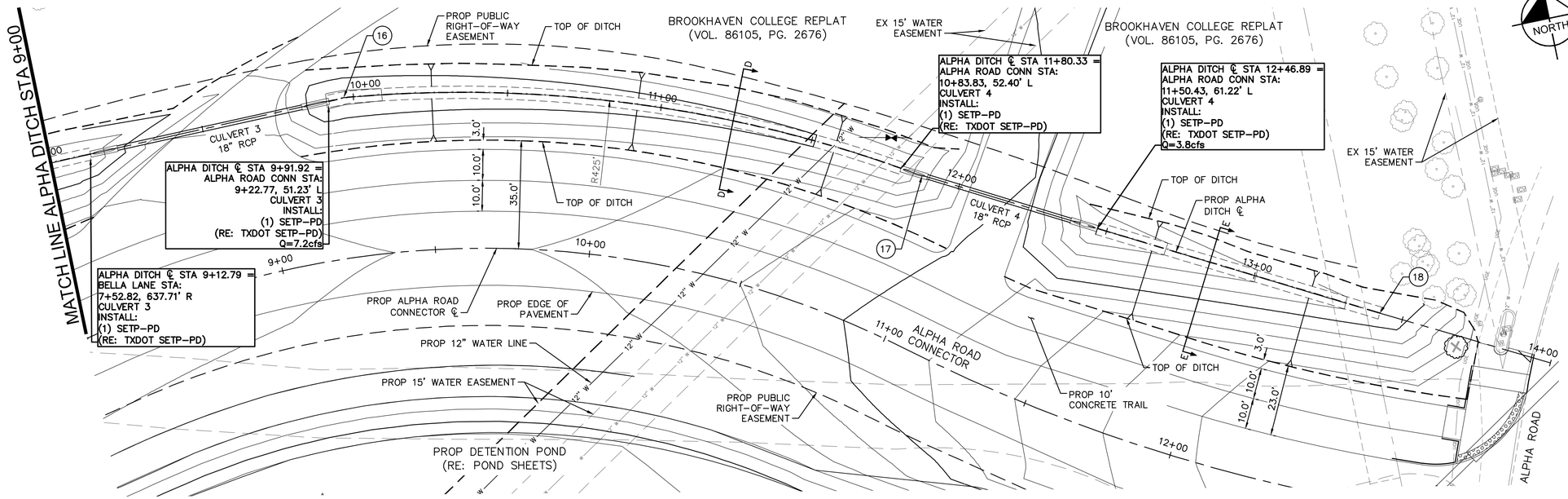


| POINT NO. | DESCRIPTION | ALIGNMENT | STATION | OFFSET |
|---|---|---|---|---|
| 16 | PC | ALPHA ROAD CONN | 9+26.98 | 51.79' L |
| 17 | PT | ALPHA ROAD CONN | 10+90.00 | 53.01' L |
| 18 | PI | ALPHA ROAD CONN | 12+58.10 | 61.13' L |

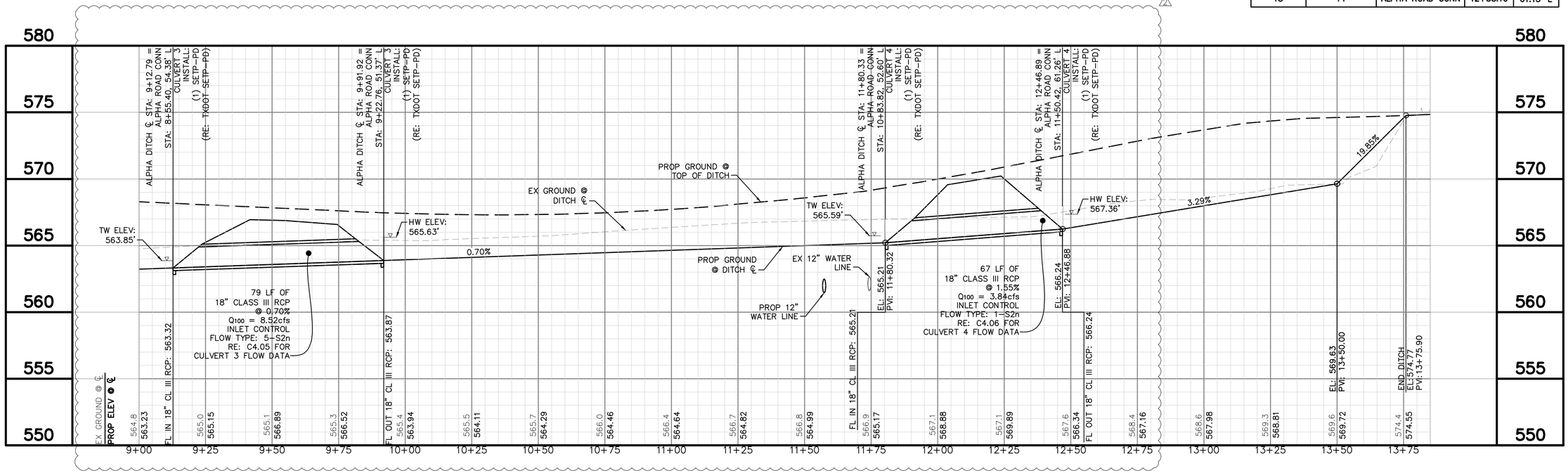


811 Know what's below. Call before you dig.

| No. | REVISIONS | DATE | BY |
|---|---|---|---|
| 1 | ADDENDUM #2 | 10/18/21 | CDS |

PROJECT NO. 2021-01C/ BID NO. 21-69

Kimley»Horn
2201 WEST ROYAL LANE, SUITE 275, IRVING, TX 75063
PHONE: 214-420-5600
WWW.KIMLEY-HORN.COM
© 2021 KIMLEY-HORN AND ASSOCIATES, INC.
TEXAS REGISTERED ENGINEERING FIRM #F-928

10/18/2021
STATE OF TEXAS
RYAN DELMOTTE
114242
LICENSED
PROFESSIONAL ENGINEER

KHA PROJECT 063543031
DATE 10/18/2021
SCALE AS SHOWN
DESIGNED BY RMD
DRAWN BY CDS
CHECKED BY LNA

**TOWN OF ADDISON**
ALPHA ROAD CONN.
FROM FARMERS BRANCH CREEK TO ALPHA ROAD

DRAINAGE
ALPHA DITCH
STA 9+00 TO END

SHEET NUMBER
C4.11

Plotted By: Shettcliff, Cody October 15, 2021 11:31:13am K:\IAC_Civil\063543031 Addison Alpha Road Corridor\CAD\01 Plan Sheets\Drainage Plan&Profile.dwg
This document, together with the concepts and designs presented herein, as an instrument of service, is intended only for the specific purpose and client for which it was prepared. Reuse of and improper reliance on this document without written authorization and adaptation by Kimley-Horn and Associates, Inc. shall be without liability to Kimley-Horn and Associates, Inc.

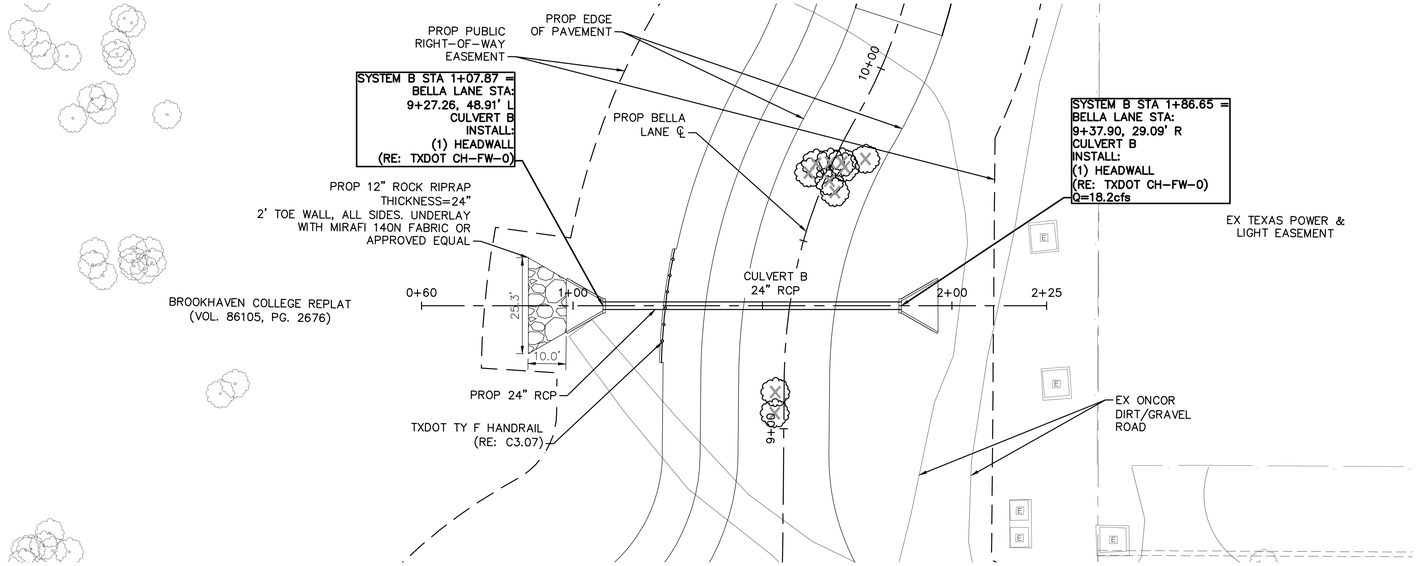


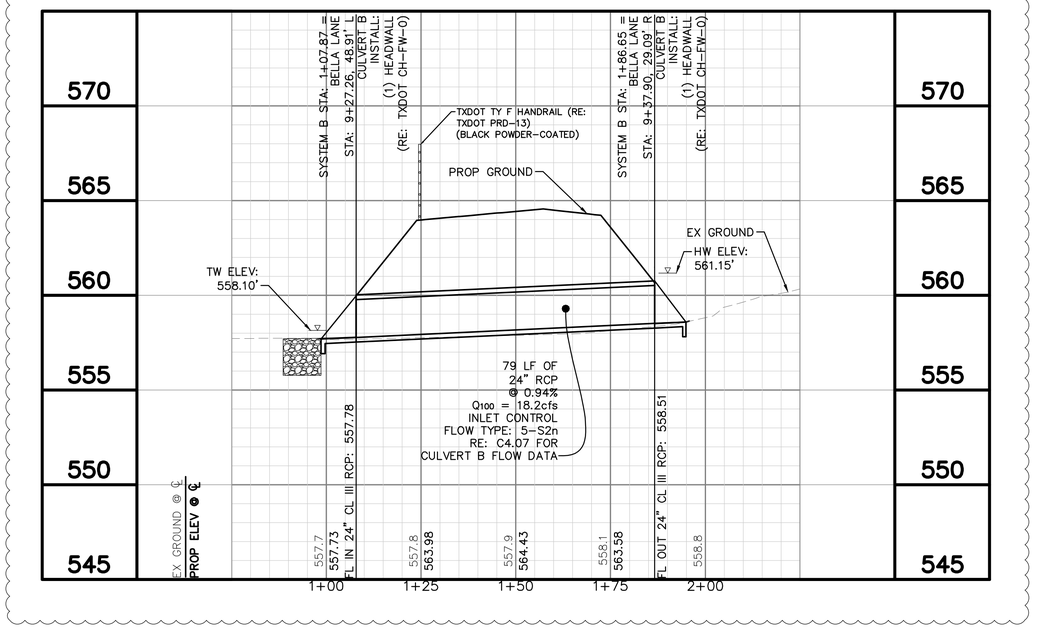


NORTH

GRAPHIC SCALE IN FEET
0 10 20 40

LEGEND
- EX ROW
- EX EASEMENT
- PROP EASEMENT
- PROP STORM DRAIN

| No. | REVISIONS | DATE | BY |
|---|---|---|---|
| 2 | ADDENDUM #2 | 10/18/21 | CDS |

PROJECT NO. 2021-01C/ BID NO. 21-69

Kimley»Horn
2201 WEST ROYAL LANE, SUITE 275, IRVING, TX 75063
PHONE: 214-420-5600
WWW.KIMLEY-HORN.COM
© 2021 KIMLEY-HORN AND ASSOCIATES, INC.
TEXAS REGISTERED ENGINEERING FIRM #F-928

10/18/2021
STATE OF TEXAS
RYAN DELMOTTE
114242
LICENSED
PROFESSIONAL ENGINEER

KHA PROJECT 063543031
DATE 10/18/2021
SCALE AS SHOWN
DESIGNED BY RMD
DRAWN BY CDS
CHECKED BY LNA

# TOWN OF ADDISON
ALPHA ROAD CONN.
FROM FARMERS BRANCH
CREEK TO ALPHA ROAD

## DRAINAGE
SYSTEM B
SHEET 1 OF 1

811
Know what's below.
Call before you dig.

SHEET NUMBER
C4.12

Plotted By:Shadbolt, Cody October 15, 2021 11:31:18am K:\LAC_Civil\063543031_Addison_Alpha_Road_Connector\CADD\PlanSheets\Drainage Plan&Profile.dwg
This document, together with the concepts and designs presented herein, as an instrument of service, is intended only for the specific purpose and client for which it was prepared. Reuse of and improper reliance on this document without written authorization and adaptation by Kimley-Horn and Associates, Inc. shall be without liability to Kimley-Horn and Associates, Inc.

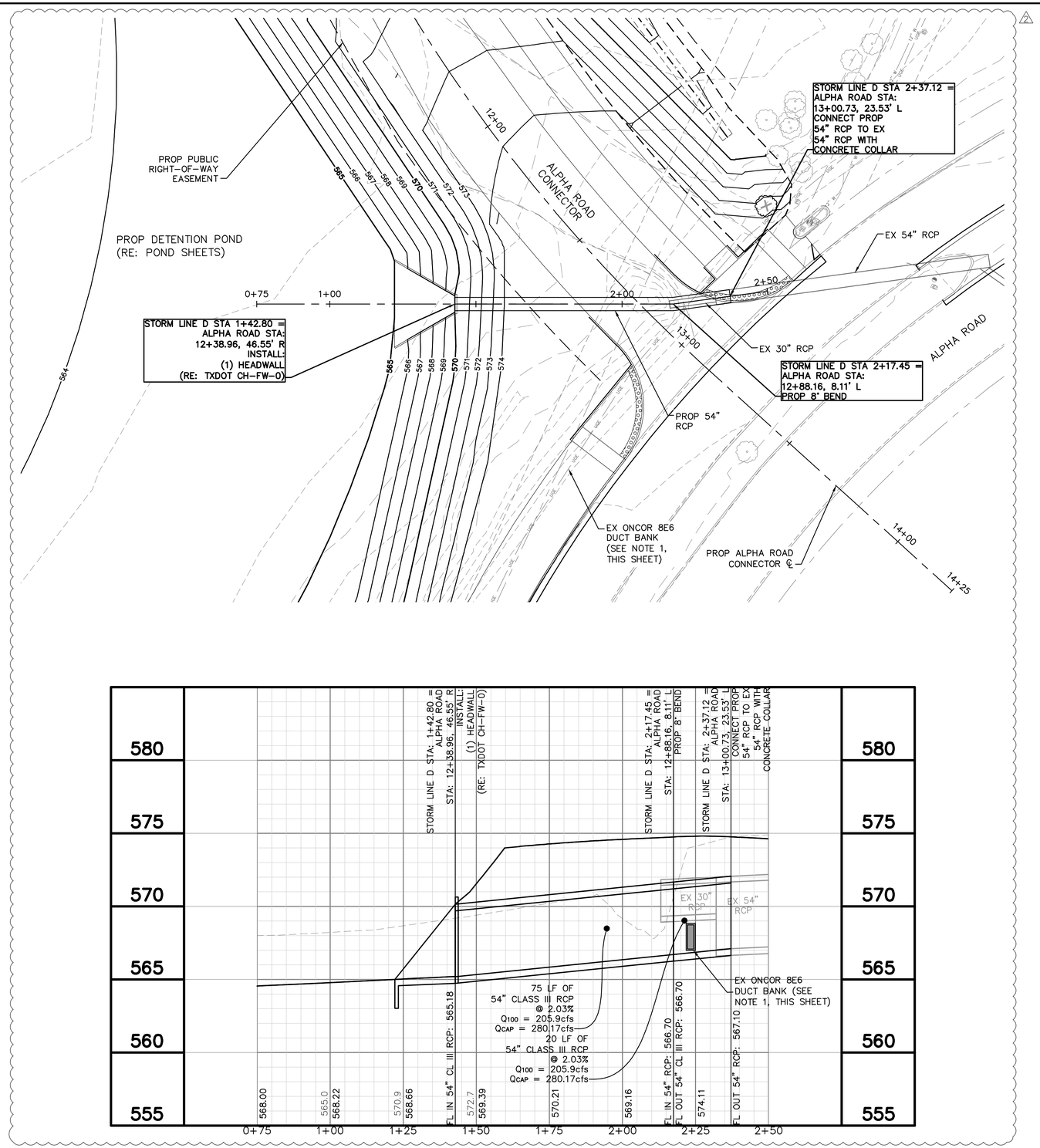


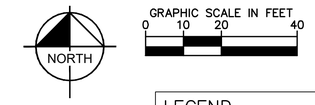


## LEGEND

- EX ROW
- EX EASEMENT
- PROP EASEMENT
- PROP STORM DRAIN

## NOTES

1. ONCOR IS IN THE PROCESS OF LOWERING THE DUCT BANK TO CLEAR THE PROPOSED 54" RCP EXTENSION AND WORK IS ANTICIPATED TO BE COMPLETED PRIOR TO END OF APRIL 2022. CONTRACTOR SHALL COORDINATE WITH ONCOR AND PHASE IMPROVEMENTS TO BE COMPLETED AFTER DUCT BANK WORK IS COMPLETE.

Know what's below. Call before you dig.

| No. | REVISIONS | DATE | BY |
|---|---|---|---|
| 2 | ADDENDUM #2 | 10/18/21 | CDS |

PROJECT NO. 2021-01C/ BID NO. 21-69


Kimley»Horn
2201 WEST ROYAL LANE, SUITE 275, IRVING, TX 75063
PHONE: 214-420-5600
WWW.KIMLEY-HORN.COM


© 2021 KIMLEY-HORN AND ASSOCIATES, INC.
TEXAS REGISTERED ENGINEERING FIRM #F-928


10/18/2021

STATE OF TEXAS
RYAN DELMOTTE
114242
LICENSED
PROFESSIONAL ENGINEER

KHA PROJECT 063543031
DATE 10/18/2021
SCALE AS SHOWN
DESIGNED BY RMD
DRAWN BY CDS
CHECKED BY LNA

# TOWN OF ADDISON
## ALPHA ROAD CONN. FROM FARMERS BRANCH CREEK TO ALPHA ROAD

## DRAINAGE SYSTEM D

SHEET NUMBER
C4.15


Plotted By:Shadbolt, Cody October 18, 2021 02:25:47pm K:\LAC_Civil\063543031_Addison_Alpha_Road_Connector\CADD\PlanSheets\Drainage Plan&Profile2.dwg
This document, together with the concepts and designs presented herein, as an instrument of service, is intended only for the specific purpose and client for which it was prepared. Reuse of and improper reliance on this document without written authorization and adaptation by Kimley-Horn and Associates, Inc. shall be without liability to Kimley-Horn and Associates, Inc.

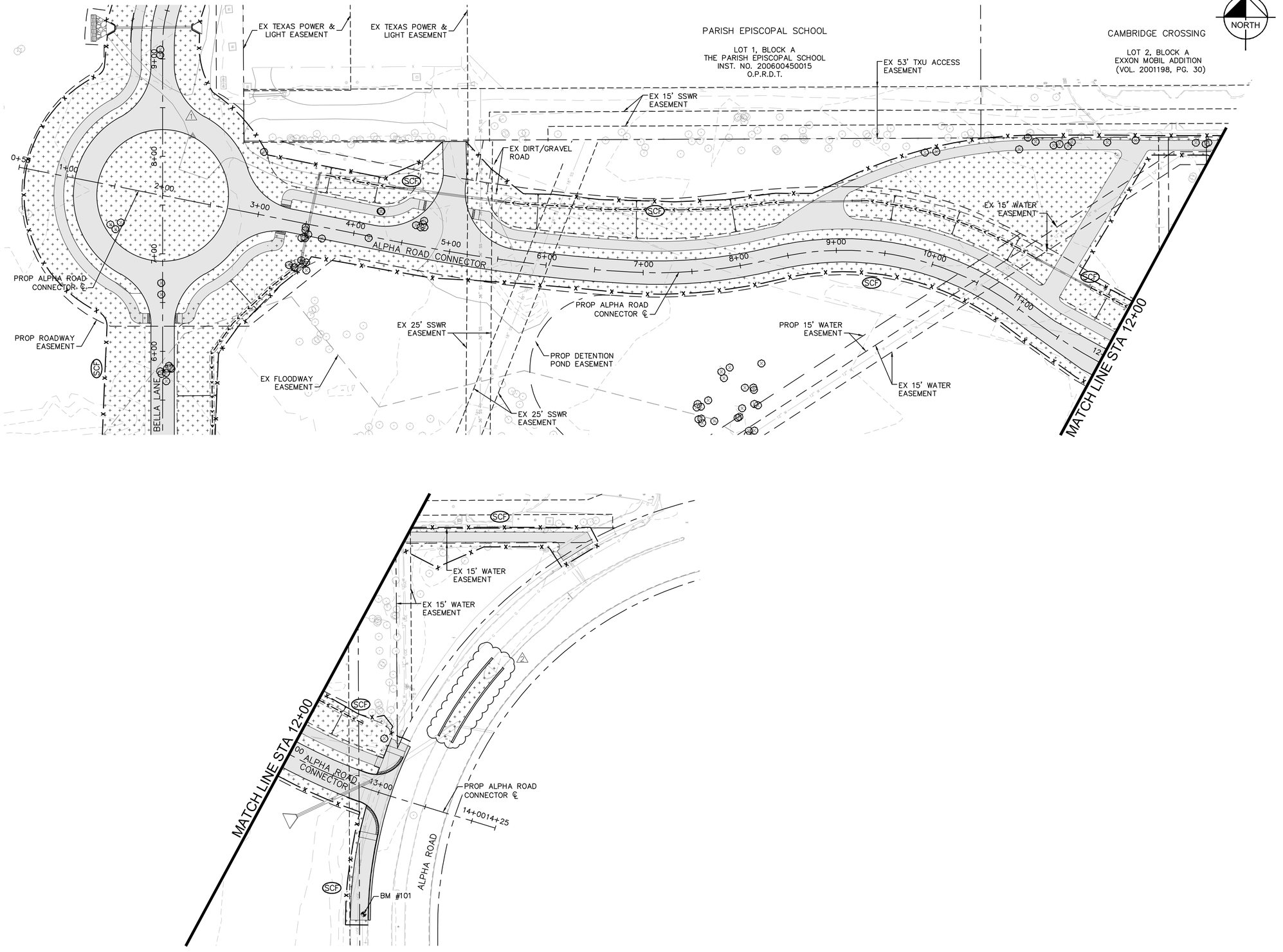


GRAPHIC SCALE IN FEET
0 25 50 100

NORTH

## LEGEND

- SCF — SEDIMENT CONTROL FENCE
- IP — INLET PROTECTION
- RCD — ROCK CHECK DAM
- PROP CONCRETE
- HYDRAULIC MULCHING WITH 4" TOPSOIL

## EROSION CONTROL NOTES

1. EROSION CONTROL DEVICES AS SHOWN ON THE EROSION CONTROL PLAN FOR THE PROJECT SHALL BE INSTALLED PRIOR TO THE START OF LAND DISTURBING ACTIVITIES ON THE PROJECT.
2. ALL EROSION CONTROL DEVICES ARE TO BE INSTALLED DURING SITE PREP IN ACCORDANCE WITH THE APPROVED PLANS AND SPECIFICATIONS FOR THE PROJECT.
3. CONTRACTOR SHALL MINIMIZE THE REMOVAL OF GRASS COVER UNTIL ACTUAL WORK PHASE BEGINS.
4. IF THE EROSION CONTROL PLAN AS APPROVED CANNOT CONTROL EROSION AND OFF-SITE SEDIMENTATION FROM THE PROJECT, THE EROSION CONTROL PLAN WILL BE REQUIRED TO BE REVISED AND/OR ADDITIONAL EROSION CONTROL DEVICES WILL BE REQUIRED (NO SEPARATE PAY).
5. OFF-SITE SOIL BORROW AND SPOIL AREAS ARE CONSIDERED AS PART OF THE PROJECT SITE AND MUST ALSO COMPLY WITH THE EROSION CONTROL REQUIREMENTS FOR THIS PROJECT. THIS INCLUDES THE INSTALLATION OF BMP'S TO CONTROL OFFSITE SEDIMENTATION AND THE ESTABLISHMENT OF PERMANENT GROUND COVER ON DISTURBED AREAS PRIOR TO FINAL APPROVAL OF THE PROJECT.
6. INSPECTIONS SHALL BE MADE WEEKLY AND AFTER RAIN STORM EVENTS TO INSURE THAT THE DEVICES ARE FUNCTIONING PROPERLY.
7. CONTRACTOR SHALL BE RESPONSIBLE FOR IDENTIFYING APPROPRIATE CONSTRUCTION ENTRANCE. WHEN SEDIMENT OR MUD HAS CLOGGED THE VOID SPACES BETWEEN STONES OR MUD IS BEING TRACKED ONTO A PUBLIC ROADWAY, THE STABILIZED CONSTRUCTION ENTRANCE AGGREGATE PAD MUST BE WASHED DOWN OR REPLACED. RUNOFF FROM THE WASHDOWN OPERATION SHALL NOT BE ALLOWED TO DRAIN DIRECTLY OFF SITE WITHOUT FIRST FLOWING THROUGH ANOTHER BMP TO CONTROL OFF SITE SEDIMENTATION. PERIODIC RE-GRADING OR THE ADDITION OF NEW STONE MAY BE REQUIRED TO MAINTAIN THE EFFICIENCY OF THE INSTALLATION.
8. CONTRACTOR SHALL BE RESPONSIBLE FOR SUBMITTAL OF N.O.I., N.O.T. AND ANY ADDITIONAL INFORMATION REQUIRED BY THE E.P.A. CONTRACTOR SHALL COMPLY WITH ALL E.P.A. STORMWATER POLLUTION PREVENTION REQUIREMENTS.
9. PRIOR TO FINAL ACCEPTANCE AND/OR OPENING ROADWAY TO TRAFFIC, ALL DISTURBED AREAS SHALL BE STABILIZED AND EROSION CONTROL DEVICES SHALL BE REMOVED.
10. SEE GENERAL NOTES SHEET FOR EROSION CONTROL REQUIREMENTS.

811 Know what's below. Call before you dig.

| No. | REVISIONS | DATE | BY |
|---|---|---|---|
| 1 | ADDENDUM #1 | 10/12/21 | CDS |
| 2 | ADDENDUM #2 | 10/18/21 | CDS |

PROJECT NO. 2021-01C/ BID NO. 21-69

Kimley»Horn
2201 WEST ROYAL LANE, SUITE 275, IRVING, TX 75063
PHONE: 214-420-5600
WWW.KIMLEY-HORN.COM
© 2021 KIMLEY-HORN AND ASSOCIATES, INC.
TEXAS REGISTERED ENGINEERING FIRM #F-928

10/18/2021

STATE OF TEXAS
RYAN DELMOTTE
114242
LICENSED PROFESSIONAL ENGINEER

| KHA PROJECT 063543031 | DATE 10/18/2021 | SCALE AS SHOWN | DESIGNED BY RMD | DRAWN BY CDS | CHECKED BY LNA |
|---|---|---|---|---|---|

# TOWN OF ADDISON
## ALPHA ROAD CONN. FROM FARMERS BRANCH CREEK TO ALPHA ROAD

## EROSION CONTROL ALPHA ROAD CONNECTOR

SHEET NUMBER
C9.02

Plotted By: Skadbolt, Cody October 15, 2021 11:36:25am K:\JAC_Civil\063543031_Addison_Alpha_Road_Connector\CAD\PlanSheets\Erosion Control.dwg
This document, together with the concepts and designs presented herein, as an instrument of service, is intended only for the specific purpose and client for which it was prepared. Reuse of and improper reliance on this document without written authorization and adaptation by Kimley-Horn and Associates, Inc. shall be without liability to Kimley-Horn and Associates, Inc.

PROJECT NO: 2021-01C
BID NO: 21-69
KHA NO. 063543031

THE TOWN OF ADDISON

CONSTRUCTION PLANS FOR

# BELLA LANE SOUTH EXTENSION &

**FROM VITRUVIAN PARK TO WINDMILL CIRCLE ( APPROXIMATELY 1250 LF)**

# ALPHA ROAD CONNECTOR

**FROM FARMERS BRANCH CREEK TO ALPHA ROAD (APPROXIMATELY 1200 LF)**

## LOCATION MAP:

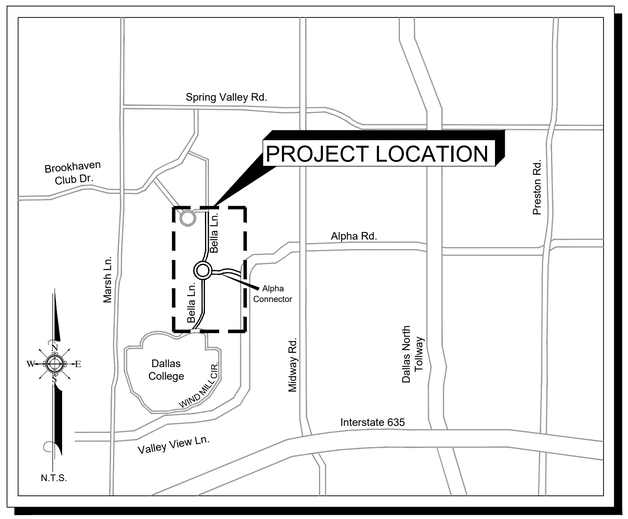


PROJECT NO: 2021-01C
BID NO: 21-69

ADDISON

## CITY OFFICIALS:

| | |
|---|---|
| Mayor: | Joe Chow |
| Mayor Pro Tem: | Guillermo Quintanilla |
| Deputy Mayor Pro Tem: | Paul Walden |
| City Council: | Tom Braun<br>Lori Ward<br>Kathryn Wheeler<br>Marlin Willesen |
| City Manager: | Wesley S. Pierson |
| Director of Public Works and Engineering Services: | Shannon Hicks, P.E. |

STATE OF TEXAS
BRIAN J. LAFOY
89363
LICENSED
PROFESSIONAL ENGINEER
09/10/2021

9/10/2021
STATE OF TEXAS
RYAN DELMOTTE
114242
LICENSED
PROFESSIONAL ENGINEER

STATE OF TEXAS
JENNIFER M. LAFOY
97309
LICENSED
PROFESSIONAL ENGINEER
10 SEPTEMBER 2021

811
Know what's **below.**
**Call** before you dig.

## TOWN OF ADDISON


Addison Services Center
16801 Westgrove Drive
Addison, TX 75001
Ph. 972-450-2871


## FINAL SUBMITTAL
## SEPTEMBER 2021


Kimley»Horn
2201 West Royal Lane, Suite 275, Irving, TX 75063 214-420-5600
Texas Registered Engineering Firm # F-928


SHEET NUMBER
C0.01

## GENERAL

| SHEET NUMBER | SHEET TITLE |
|---|---|
| C0.01 | COVER |
| C0.02 | SHEET INDEX |
| C0.03 | PROJECT OVERVIEW |
| C0.04 | EASEMENT OVERVIEW |
| C0.05 | GENERAL NOTES - TOWN OF ADDISON |
| C0.06 | GENERAL NOTES - CITY OF FARMERS BRANCH - SHEET 1 OF 2 |
| C0.07 | GENERAL NOTES - CITY OF FARMERS BRANCH - SHEET 2 OF 2 |

## PROJECT CONTROL

| SHEET NUMBER | SHEET TITLE |
|---|---|
| C1.01 | PROJECT CONTROL - ALPHA ROAD CONNECTOR |
| C1.02 | PROJECT CONTROL - BELLA LANE |

## REMOVAL PLAN

| SHEET NUMBER | SHEET TITLE |
|---|---|
| C1.03 | REMOVAL PLAN - ALPHA ROAD CONNECTOR - SHEET 1 OF 2 |
| C1.04 | REMOVAL PLAN - ALPHA ROAD CONNECTOR - SHEET 2 OF 2 |
| C1.05 | REMOVAL PLAN - BELLA LANE EXTENSION |
| C1.06 | TREE REMOVAL PLAN - SHEET 1 OF 3 |
| C1.07 | TREE REMOVAL PLAN - SHEET 2 OF 3 |
| C1.08 | TREE REMOVAL PLAN - SHEET 3 OF 3 |

## TYPICAL SECTIONS

| SHEET NUMBER | SHEET TITLE |
|---|---|
| C1.09 | TYPICAL SECTIONS - SHEET 1 OF 2 |
| C1.10 | TYPICAL SECTIONS - SHEET 2 OF 2 |

## TRAFFIC CONTROL PLANS

| SHEET NUMBER | SHEET TITLE |
|---|---|
| C2.01 | TRAFFIC CONTROL PLANS - ALPHA ROAD CONNECTOR |
| C2.02 | TRAFFIC CONTROL PLANS - BELLA LANE EXTENSION |

## PAVING

| SHEET NUMBER | SHEET TITLE |
|---|---|
| C3.01 | PAVING - PLAN AND PROFILE - ALPHA ROAD CONNECTOR - BEGIN TO STA 4+00 |
| C3.02 | PAVING - PLAN AND PROFILE - ALPHA ROAD CONNECTOR - STA 4+00 TO STA 8+00 |
| C3.03 | PAVING - PLAN AND PROFILE - ALPHA ROAD CONNECTOR - STA 8+00 TO STA 12+00 |
| C3.04 | PAVING - PLAN AND PROFILE - ALPHA ROAD CONNECTOR - STA 12+00 TO END |
| C3.05 | PAVING - PLAN AND PROFILE - BELLA LANE EXTENSION - BEGIN TO STA 4+00 |
| C3.06 | PAVING - PLAN AND PROFILE - BELLA LANE EXTENSION - STA 4+00 TO STA 8+00 |
| C3.07 | PAVING - PLAN AND PROFILE - BELLA LANE EXTENSION - STA 8+00 TO STA 12+00 |
| C3.08 | PAVING - PLAN AND PROFILE - BELLA LANE EXTENSION - STA 12+00 TO END |
| C3.09 | PAVING - PAVING AND SIDEWALK LAYOUT |
| C3.10 | PAVING - RAMP GRADING |
| C3.11 | PAVING - TRAFFIC CIRCLE - GRADING PLAN |
| C3.12 | *TXDOT DETAILS - BED-14 |
| C3.13 | *TXDOT DETAILS - PRD-13 |
| C3.14 - C3.17 | *TXDOT DETAILS - PED-18 (4 SHEETS) |
| C3.18 - C3.21 | *STANDARD DETAILS - TOWN OF ADDISON (4 SHEETS) |
| C3.22 | *STANDARD DETAILS - CITY OF FARMERS BRANCH |

## DRAINAGE

| SHEET NUMBER | SHEET TITLE |
|---|---|
| C4.01 | DRAINAGE - PROPOSED DRAINAGE AREA MAP |
| C4.02 | DRAINAGE - DRAINAGE CALCULATIONS |
| C4.03 | DRAINAGE - CULVERT 1 CALCULATIONS |
| C4.04 | DRAINAGE - CULVERT 2 CALCULATIONS |
| C4.05 | DRAINAGE - CULVERT 3 CALCULATIONS |
| C4.06 | DRAINAGE - CULVERT 4 CALCULATIONS |
| C4.07 | DRAINAGE - CULVERT B CALCULATIONS |
| C4.08 | DRAINAGE - DITCH SECTIONS |
| C4.09 | DRAINAGE - SYSTEM A - ALPHA DITCH - BEGIN TO STA 5+00 |
| C4.10 | DRAINAGE - SYSTEM A - ALPHA DITCH - STA 5+00 TO STA 9+00 |
| C4.11 | DRAINAGE - SYSTEM A - ALPHA DITCH - STA 9+00 TO END |
| C4.12 | DRAINAGE - SYSTEM B |
| C4.13 | DRAINAGE - SYSTEM C |
| C4.14 | DRAINAGE - SYSTEM C LATERALS |
| C4.15 | DRAINAGE - SYSTEM D |
| C4.16 | DRAINAGE - BELLA DITCH |
| C4.17 | *TXDOT DETAILS - CH-FW-0 |
| C4.18 | *TXDOT DETAILS - SETP-PD |
| C4.19 | *STANDARD DETAILS - TOWN OF ADDISON |

## STRUCTURAL

| SHEET NUMBER | SHEET TITLE |
|---|---|
| C5.01 | STRUCTURAL - BRIDGE LAYOUT - PLAN AND PROFILE |
| C5.02 | STRUCTURAL - TYPICAL SECTION |
| C5.03 | STRUCTURAL - ESTIMATED QUANTITIES |
| C5.04 | STRUCTURAL - FOUNDATION LAYOUT |
| C5.05 - C5.06 | STRUCTURAL - ABUTMENT DETAILS (2 SHEETS) |
| C5.07 | STRUCTURAL - FRAMING PLAN |
| C5.08 | STRUCTURAL - SLAB DETAILS |
| C5.09 | STRUCTURAL - TRANSVERSE SECTION |
| C5.10 | STRUCTURAL - IGND |
| C5.11 | STRUCTURAL - **TXDOT - BAS-C |
| C5.12 - C5.13 | STRUCTURAL - **TXDOT - BRSM - (2 SHEETS) |
| C5.14 | STRUCTURAL - **TXDOT - BS-EJCP |
| C5.15 - C5.16 | STRUCTURAL - **TXDOT - CSAB - (2 SHEETS) |
| C5.17 - C5.19 | STRUCTURAL - **TXDOT - C221 - (3 SHEETS) |
| C5.20 - C5.21 | STRUCTURAL - **TXDOT - FD - (2 SHEETS) |
| C5.22 | STRUCTURAL - **TXDOT - IGCS |
| C5.23 - C5.24 | STRUCTURAL - **TXDOT - IGD - (2 SHEETS) |
| C5.25 - C5.27 | STRUCTURAL - **TXDOT - IGEB - (3 SHEETS) |
| C5.28 - C5.29 | STRUCTURAL - **TXDOT - IGMS - (2 SHEETS) |
| C5.30 | STRUCTURAL - **TXDOT - IGSK |
| C5.31 | STRUCTURAL - **TXDOT - IGTS |
| C5.32 - C5.33 | STRUCTURAL - **TXDOT - MEBR - (2 SHEETS) |
| C5.34 - C5.37 | STRUCTURAL - **TXDOT - PCP - (4 SHEETS) |
| C5.38 | STRUCTURAL - **TXDOT - PCP-FAB |
| C5.39 - C5.40 | STRUCTURAL - **TXDOT - PMDF - (2 SHEETS) |
| C5.41 | STRUCTURAL - **TXDOT - SEJ-M |

## PAVEMENT MARKING AND SIGNING

| SHEET NUMBER | SHEET TITLE |
|---|---|
| C6.01 | PAVEMENT MARKING AND SIGNING - ALPHA ROAD CONNECTOR - BEGIN TO STA 8+00 |
| C6.02 | PAVEMENT MARKING AND SIGNING - ALPHA ROAD CONNECTOR - STA 8+00 TO END |
| C6.03 | PAVEMENT MARKING AND SIGNING - BELLA LANE EXTENSION - BEGIN TO STA 8+00 |
| C6.04 | PAVEMENT MARKING AND SIGNING - BELLA LANE EXTENSION - STA 8+00 TO END |
| C6.05 | *TXDOT DETAILS - PM(1)-20 |
| C6.06 | *TXDOT DETAILS - PM(2)-20 |
| C6.07 | *TXDOT DETAILS - PM(4)-20 |
| C6.08 | *TXDOT DETAILS - SMD(GEN)-08 |
| C6.09 - C6.11 | *TXDOT DETAILS - SMD(BR-1,2,3)-14 (3 SHEETS) |
| C6.12 - C6.14 | *TXDOT DETAILS - SMD (SLIP-1,2,3)-08 (3 SHEETS) |
| C6.15 | *STANDARD DETAILS - CITY OF FARMERS BRANCH |

## WATER LINE

| SHEET NUMBER | SHEET TITLE |
|---|---|
| C7.01 | WATER LINE - PLAN AND PROFILE - ALPHA ROAD CONNECTOR - BEGIN TO STA 4+50 |
| C7.02 | WATER LINE - PLAN AND PROFILE - ALPHA ROAD CONNECTOR - STA 4+50 TO END |
| C7.03 | WATER LINE - PLAN AND PROFILE - BELLA LANE |
| C7.04 - C7.05 | *WATER LINE - STANDARD DETAILS - TOWN OF ADDISON (2 SHEETS) |

## SANITARY SEWER LINE

| SHEET NUMBER | SHEET TITLE |
|---|---|
| C8.01 | SANITARY SEWER LINE - PLAN AND PROFILE - BELLA LANE - BEGIN TO END |
| C8.02 | *SANITARY SEWER LINE - TOWN OF ADDISON |

## EROSION CONTROL

| SHEET NUMBER | SHEET TITLE |
|---|---|
| C9.01 | EROSION CONTROL - DETENTION POND |
| C9.02 | EROSION CONTROL - ALPHA ROAD CONNECTOR |
| C9.03 | EROSION CONTROL - BELLA LANE EXTENSION |
| C9.04 | *EROSION CONTROL - STANDARD DETAILS |

## DETENTION POND

| SHEET NUMBER | SHEET TITLE |
|---|---|
| C10.01 | DETENTION POND - LAYOUT |
| C10.02 | DETENTION POND - OUTFALL - DRAINAGE SYSTEM D |

## FARMERS BRANCH CREEK TRIBUTARY 1

| SHEET NUMBER | SHEET TITLE |
|---|---|
| C11.01 | FARMERS BRANCH CREEK TRIBUTARY 1 - CHANNEL GRADING |
| C11.02 | FARMERS BRANCH CREEK TRIBUTARY 1 - CHANNEL LINING DETAILS |

## CROSS SECTIONS

| SHEET NUMBER | SHEET TITLE |
|---|---|
| C12.01 | CROSS SECTIONS - ALPHA ROAD CONNECTOR - BEGIN TO STA 7+00 |
| C12.02 | CROSS SECTIONS - ALPHA ROAD CONNECTOR - STA 7+50 TO STA 11+00 |
| C12.03 | CROSS SECTIONS - BELLA LANE EXTENSION - BEGIN TO STA 5+50 |
| C12.04 | CROSS SECTIONS - BELLA LANE EXTENSION - STA 6+00 TO 9+50 |
| C12.05 | CROSS SECTIONS - BELLA LANE EXTENSION - STA 10+00 TO END |

*THE CITY STANDARD DETAIL SHEETS AND STANDARD TXDOT SHEETS, SPECIFICALLY IDENTIFIED IN THIS SHEET INDEX, HAVE BEEN SELECTED BY ME OR UNDER MY RESPONSIBLE SUPERVISION AS BEING APPLICABLE TO THIS PROJECT.

9/10/2021

STATE OF TEXAS
RYAN DELMOTTE
114242
LICENSED
PROFESSIONAL ENGINEER

**THE STANDARD TXDOT SHEETS, SPECIFICALLY IDENTIFIED IN THIS SHEET INDEX, HAVE BEEN SELECTED BY ME OR UNDER MY RESPONSIBLE SUPERVISION AS BEING APPLICABLE TO THIS PROJECT.

STATE OF TEXAS
BRIAN J. LAFOY
89363
LICENSED
PROFESSIONAL ENGINEER
09/10/2021

| No. | REVISIONS | DATE | BY |
|---|---|---|---|
| | | | |

PROJECT NO. 2021-01C/ BID NO. 21-69

Kimley»Horn
2201 WEST ROYAL LANE, SUITE 275, IRVING, TX 75063
PHONE: 214-420-5600
WWW.KIMLEY-HORN.COM
© 2021 KIMLEY-HORN AND ASSOCIATES, INC.
TEXAS REGISTERED ENGINEERING FIRM #F-928

9/10/2021

STATE OF TEXAS
RYAN DELMOTTE
114242
LICENSED
PROFESSIONAL ENGINEER

KHA PROJECT 063543031

| DATE | SCALE | DESIGNED BY | DRAWN BY | CHECKED BY |
|---|---|---|---|---|
| 09/10/2021 | AS SHOWN | RMD | CDS | LNA |

**TOWN OF ADDISON**
ALPHA ROAD CONN.
FROM FARMERS BRANCH
CREEK TO ALPHA ROAD

# SHEET INDEX

SHEET NUMBER
C0.02

Plotted By: Tyrell, Abagail September 10, 2021 12:14:36pm K:\IAC_Civil\063543031_Addison_Alpha_Road_Connector\X-ADD\Plan\Sheet\Sheet Index.dwg
This document, together with the concepts and designs presented herein, as an instrument of service, is intended only for the specific purpose and client for which it was prepared. Reuse of and improper reliance on this document without written authorization and adaptation by Kimley-Horn and Associates, Inc. shall be without liability to Kimley-Horn and Associates, Inc.

Plotted By: Snodbolt, Cody September 08, 2021 08:55:12am K:\LAC_Civil\063543031_Addison_Alpha_Road_Connector\CADD\PlanSheets\Project Overview.dwg
This document, together with the concepts and designs presented herein, as an instrument of service, is intended only for the specific purpose and client for which it was prepared. Reuse of and improper reliance on this document without written authorization and adaptation by Kimley-Horn and Associates, Inc. shall be without liability to Kimley-Horn and Associates, Inc.

MATCH LINE STA 10+00

MATCH LINE STA 10+00

EX WELL TO REMAIN

VITRUVIAN PARK

LOT 3, BLOCK A
VITRUVIAN PARK ADDITION
(INST. NO. 201300219333)

EX 20' TEXAS POWER & LIGHT EASEMENT
CITY OF FARMERS BRANCH
TOWN OF ADDISON

PROP ROADWAY EASEMENT (BY OTHERS)

PROP 8" SSWR LINE

PROP BELLA LANE ℄

BELLA LANE

PROP 8" WATER LINE

EX 4" WATER LINE (TO REMAIN)

PROP PAVEMENT (BY OTHERS)

PROP ONCOR DUCT BANK (BY OTHERS)

BEGIN CURB AND GUTTER SECTION

EX 70' TEXAS POWER & LIGHT EASEMENT

LOT 1, BLOCK A
THE PARISH EPISCOPAL SCHOOL
INST. NO. 200600450015
O.P.R.D.T.

PROP 24" RCP
(RE: DRAINAGE SHEETS)

EX TEXAS POWER & LIGHT EASEMENT

EX TEXAS POWER & LIGHT EASEMENT

PARISH EPISCOPAL SCHOOL
LOT 1, BLOCK A
THE PARISH EPISCOPAL SCHOOL
INST. NO. 200600450015
O.P.R.D.T.

EX 53' TXU ACCESS EASEMENT

CAMBRIDGE CROSSING
LOT 2, BLOCK A
EXXON MOBIL ADDITION
(VOL. 2001198, PG. 30)

EX 15' SSWR EASEMENT

ONCOR DRIVEWAY

PROP 24" RCP
(RE: DRAINAGE SHEETS)

PROP PARK EASEMENT

PROP ALPHA DITCH ℄

PROP 18" RCP
(RE: DRAINAGE SHEETS)

PROP PUBLIC RIGHT-OF-WAY EASEMENT

EX 15' WATER EASEMENT

EX 15' WATER EASEMENT

EX 15' WATER EASEMENT

PROP 18" RCP
(RE: DRAINAGE SHEETS)

PROP MEDIAN CLOSURE

PROP ALPHA ROAD CONNECTOR ℄

ALPHA ROAD CONNECTOR

PROP PUBLIC RIGHT-OF-WAY EASEMENT

PROP 24" RCP
(RE: DRAINAGE SHEETS)

EX FLOODWAY EASEMENT

EX 25' SSWR EASEMENT

EX 25' SSWR EASEMENT

PROP 15' WATER EASEMENT

EX 15' WATER EASEMENT

PROP BELLA LANE ℄

BELLA LANE

PROP DITCH ℄

BROOKHAVEN COLLEGE REPLAT
(VOL. 86105, PG. 2676)

LIKELY JURISDICTIONAL INTERMITTENT STREAM LIMITS FARMERS BRANCH CREEK TRIBUTARY 1

PROP BELLA LANE BRIDGE
(RE: STRUCTURAL SHEETS)

EX 25' SSWR EASEMENT

PROP 18" RCP
(RE: DRAINAGE SHEETS)

PROP DETENTION POND EASEMENT

PROP 30" RCP
(RE: DRAINAGE SHEETS)

BROOKHAVEN COLLEGE REPLAT
(VOL. 86105, PG. 2676)

BM #101

ALPHA ROAD

LIKELY NON-JURISDICTIONAL DITCH

LIKELY JURISDICTIONAL INTERMITTENT STREAM LIMITS FARMERS BRANCH CREEK TRIBUTARY 1

EX 25' SSWR EASEMENT

EX 15' WATER EASEMENT

PROP DITCH ℄

PROP DETENTION POND
(RE: POND SHEETS)

WINDMILL CIRCLE

DALLAS COLLEGE

LIKELY NON-JURISDICTIONAL SWALE

EX 25' SSWR EASEMENT

NORTH

GRAPHIC SCALE IN FEET
0 25 50 100

Know what's below.
Call before you dig.

| No. | REVISIONS | DATE | BY |
|---|---|---|---|
| | | | |

PROJECT NO. 2021-01C/ BID NO. 21-69

Kimley»Horn
2201 WEST ROYAL LANE, SUITE 275, IRVING, TX 75063
PHONE: 214-420-5600
WWW.KIMLEY-HORN.COM
© 2021 KIMLEY-HORN AND ASSOCIATES, INC.
TEXAS REGISTERED ENGINEERING FIRM #F-928

9/10/2021

STATE OF TEXAS
RYAN DELMOTTE
114242
LICENSED PROFESSIONAL ENGINEER

| KHA PROJECT 063543031 | DATE 09/10/2021 | SCALE AS SHOWN | DESIGNED BY RMD | DRAWN BY CDS | CHECKED BY LNA |
|---|---|---|---|---|---|

# TOWN OF ADDISON
## ALPHA ROAD CONN. FROM FARMERS BRANCH CREEK TO ALPHA ROAD

## GENERAL PROJECT OVERVIEW

SHEET NUMBER
C0.03

Plotted By:Shadbolt, Cody September 08, 2021 08:55:37am K:\LAC_Civil\063543031_Addison_Alpha_Road_Connector\CADD\PlanSheets\Easement Overview.dwg
This document, together with the concepts and designs presented herein, as an instrument of service, is intended only for the specific purpose and client for which it was prepared. Reuse of and improper reliance on this document without written authorization and adaptation by Kimley-Horn and Associates, Inc. shall be without liability to Kimley-Horn and Associates, Inc.

NORTH

GRAPHIC SCALE IN FEET
0 25 50 100

ADDISON EASEMENT (BY OTHERS)
GRANTOR: VPDEV 2, LLC
GRANTEE: TOWN OF ADDISON
ACQUIRED AS PART OF SEPARATE PROJECT
USES: PUBLIC RIGHT-OF-WAY

VITRUVIAN PARK
LOT 3, BLOCK A
VITRUVIAN PARK ADDITION
(INST. NO. 201300219333)

BELLA LANE

TOWN OF ADDISON
CITY OF FARMERS BRANCH

EX TEXAS POWER & LIGHT EASEMENT

FARMERS BRANCH EASEMENT
GRANTOR: DALLAS COLLEGE
GRANTEE: CITY OF FARMERS BRANCH
SIZE: 4.01 ACRES
USES: PUBLIC RIGHT-OF-WAY

LOT 1, BLOCK A
THE PARISH EPISCOPAL SCHOOL
INST. NO. 200600450015
O.P.R.D.T.

PARISH

PARISH EPISCOPAL SCHOOL
LOT 1, BLOCK A
THE PARISH EPISCOPAL SCHOOL
INST. NO. 200600450015
O.P.R.D.T.

EX TEXAS POWER & LIGHT EASEMENT

WATER LINE EASEMENT
GRANTOR: DALLAS COLLEGE
GRANTEE: CITY OF FARMERS BRANCH
SIZE: 0.17 ACRES
USES: WATER LINE

EX 53' TXU ACCESS EASEMENT

CAMBRIDGE CROSSING
LOT 2, BLOCK A
EXXON MOBIL ADDITION
(VOL. 2001198, PG. 30)

ALPHA ROAD MINI-PARK EASEMENT
GRANTOR: DALLAS COLLEGE
GRANTEE: CITY OF FARMERS BRANCH
SIZE: 1.23 ACRES
USES: PUBLIC PARK AND RECREATION

ASSUMED MINI-PARK
SIZE: 1.84 ACRES

ALPHA ROAD CONNECTOR

EXISTING CITY OF FARMERS BRANCH PROPERTY
(ASSUMED PORTION OF MINI-PARK)
SIZE: 0.44 ACRES

EXISTING RIGHT-OF-WAY WITHIN CITY OF FARMERS BRANCH
(ASSUMED PORTION OF MINI-PARK)
SIZE: 0.17 ACRES

PROJECTION OF PROPOSED
ROADWAY/PARK EASEMENT

BROOKHAVEN COLLEGE REPLAT
(VOL. 86105, PG. 2676)

EX 25' SSWR EASEMENT

EX 25' SSWR EASEMENT

EX FLOODWAY EASEMENT

EX 25' SSWR EASEMENT

EX 15' WATER EASEMENT

BROOKHAVEN COLLEGE REPLAT
(VOL. 86105, PG. 2676)

DETENTION POND EASEMENT
GRANTOR: DALLAS COLLEGE
GRANTEE: CITY OF FARMERS BRANCH
SIZE: 5.87 ACRES
USES: DETENTION POND AND ASSOCIATED
STORM DRAIN INFRASTRUCTURE

ALPHA ROAD

WINDMILL CIRCLE

DALLAS COLLEGE

| No. | REVISIONS | DATE | BY |
|---|---|---|---|
| | | | |

PROJECT NO. 2021-01C/ BID NO. 21-69

Kimley»Horn
2201 WEST ROYAL LANE, SUITE 275, IRVING, TX 75063
PHONE: 214-420-5600
WWW.KIMLEY-HORN.COM
© 2021 KIMLEY-HORN AND ASSOCIATES, INC.
TEXAS REGISTERED ENGINEERING FIRM #F-928

9/10/2021

STATE OF TEXAS
RYAN DELMOTTE
114242
LICENSED
PROFESSIONAL ENGINEER

| KHA PROJECT 063543031 | DATE 09/10/2021 | SCALE AS SHOWN | DESIGNED BY RMD |
|---|---|---|---|
| | | DRAWN BY CDS | CHECKED BY LNA |

# TOWN OF ADDISON
## ALPHA ROAD CONN. FROM FARMERS BRANCH CREEK TO ALPHA ROAD

## GENERAL EASEMENT OVERVIEW

SHEET NUMBER
C0.04

## GENERAL ITEMS

1. Prior to any construction the contractor shall be familiar with the contract documents, specifications, construction plans (including notes), Town of ADDISON specifications and any other applicable standards or specifications relevant to the proper completion of the work specified. Failure on the part of the contractor to be familiar with all standards and specifications pertaining to this work shall in no way relieve the contractor of responsibility for performing the work in accordance with such applicable standards and specifications.
2. Prior to construction, contractor shall have in their possession all necessary permits, plans, licenses etc. Contractor shall have at least one set of approved engineering plans and specifications on site at all times.
3. All work shall conform to the Town of ADDISON's design manuals and standards. In the event an item is not covered in the plans or the Town of ADDISON's design manuals and standards, notification shall be given to the Owner's Representative and Project Engineers. The Town engineer shall have the final decision on all construction materials, methods and procedures.
4. Representative of the owner, engineer, Town, geotechnical engineer and reviewing authorities and agencies, will perform construction inspection. Unrestricted access shall be provided to them at all times. Contractor is responsible for understanding and scheduling required inspections. Test samples shall be collected and processed by certified technicians.
5. Work may not be backfilled or covered until the Town and/or inspector have inspected it.
6. All contractors must confine their activities to the work area. No encroachments onto developed or undeveloped areas will be allowed. Any damage resulting shall be contractor's responsibility to repair.
7. It will be the responsibility of each contractor to protect all existing public and private utilities throughout the construction of projects. Contractor shall contact the appropriate utility company for line locations prior to commencement of construction and shall assume full liability to those companies for any damages caused to their facilities.
8. Trench safety design will be the responsibility of the utility contractor. Contractor shall submit a trench safety design approved by a professional engineer to the Town's engineering inspector to review prior to the start of any underground utility construction.
9. Continuous access for mail service shall be provided during construction.
10. Construction may not begin earlier than 7:00 am on weekdays nor continue after dark without permission from the Town. Construction on holidays and Saturdays must be approved two days in advance.
11. Contractor shall contact the street department for the removal of any Town signs in right-of-way.
12. If any conflict arises between these general notes and any other notes found in the plans, the Town's general notes shall take precedence.
13. Contractor shall comply with all terms and conditions outlined in the Aquatic Resources Delineation Report and Nationwide Permit Memo to File dated September 10, 2021 as well as any other local, state, or federal regulations as noted or not.

## TRAFFIC CONTROL

1. When the normal function of the roadway is suspended through closure of any portion of the right-of-way, temporary construction work zone traffic control devices shall be installed to effectively guide the motoring public through the area. Consideration for road user safety, worker safety and the efficiency of road user flow shall be an integral element of every traffic control zone. All traffic control devices shall be in accordance with the latest TMUTCD.
2. Any traffic control plans not included in the engineering plan set must be submitted for review a minimum of seven (7) calendar days prior to the anticipated lane closure. Construction activity shall not begin until the traffic control plan is approved by the Town. Traffic control plans may be required on other roadways as determined by the traffic engineer or the designee. All traffic control plan must be reviewed by the traffic engineer or their designated representative.
3. The contractor shall be responsible for maintaining all traffic control devices whether or not work is active. Any deficiencies shall be corrected by the contractor immediately, regardless of time of day.
4. Lane closure will not be permitted on arterial roadways before 9:00 am or after 4:00 pm unless approved otherwise by the Town. Violations may result in suspension of all work at the job site for a minimum of forty eight (48) hours. The Town reserves the right to deny a closure for a special event.
5. Lane closures will not be permitted on streets adjacent to private and/or public schools during the following hours unless approved otherwise by the Town:
   ELEMENTARY: 7:15 AM - 8:15 AM; 2:45 PM - 3:45PM
   MIDDLE SCHOOL: 7:55 AM - 9:00 AM; 3:30 PM - 4:40PM
   HIGH SCHOOL: 6:45 AM - 7:45AM; 2:15PM-3:15PM
6. All temporary traffic control devices shall be removed as soon as practical when they are no longer needed. When work is suspended for short periods of time at the end of the workday, temporary traffic control devices that are no longer appropriate shall be removed or covered. The first violation will result in suspension of all work at the job site a minimum of forty eight (48) hours.
7. Existing permanent signs removed by the contractor for construction purposes other than stop, yield and street name signs shall be returned to the Town of ADDISON. All stop, yield and street name signs removed shall be temporarily erected in the appropriate locations (no less than seven feet (7') vertical from grade) until permanent signing can be installed . Any temporary stop or yield sign locations to be left in place overnight will require prior approval from the Town engineer.
8. Any permanent sign or existing pavement markings that conflict with the approved traffic control plan shall be covered, obliterated or removed as directed by the Town engineer.
9. Access must be maintained to all drives and side streets or as indicated in the traffic control plan.

## EROSION CONTROL AND VEGETATION

1. Every soil disturbing activity shall have an accompanying Erosion Control Plan (ECP), and either Construction Site Notice (CSN) for those activities disturbing more than one (1) but less than five (5) acres and/or Notice of Intent (NOI) for those activities disturbing five (5) or more acres. A copy of the appropriate CSN and/or NOI shall be provided to the Town of ADDISON prior to issuance of a grading permit. the ECP shall be provided to Town of ADDISON's engineering department for approval prior to grading.
2. If applicable,the CSN and/or NOI shall be posted in a location viewable to the public until construction is complete and notice of termination (NOT) submitted. The Storm Water Pollution Prevention Plan (SW3P) shall be readily available for review by federal, state or local officials.
3. If applicable, no soil disturbing activities will occur prior to the SW3P, ECP and associated Best Management Practices (BMP) being fully implemented, and then inspected by the Town's engineering inspector.
4. The contractor shall comply with the Town of ADDISON's storm water ordinance, the current NCTCOG ISWM technical manual for construction and any other state and/or local regulations.
5. The contractor shall employ measures as necessary to prevent dirt, mud, and debris from being tracked off site. Any dirt, mud, debris tracked offsite shall be cleaned up by the contractor immediately.
6. The operator or his representative shall review the site weekly and after any major storm. Adjustments/repairs to the erosion control measures will be made as needed. The contractor shall notify the Town's engineering inspector of adjustments/repairs such that the adjustments/repairs may be inspected and approved by the inspector.
7. Along parkways and medians in the right-of-way, a four-foot (4') strip of native sod shall be placed behind the curb on top of four inches (4") of topsoil. Contractor shall be responsible for any temporary irrigation or watering as needed.
8. Inspections shall be performed every seven (7) days and any repair or maintenance on erosion controls and best management practices will be made promptly as needed.
9. No excavation or curb cut-backs will be allowed within eighteen inches (18") of the street or curb without approval from the Town engineer.
10. Streets will be kept free from mud or earth materials during the construction.
11. Use of alternate erosion control devices must be approved in advance by Town engineer and shown clearly on the erosion control plans prior to any earth disturbing activities.
12. The requirements of NCTCOG best management practices standards shall apply to all alternate erosion control devices as amended by the Town.
13. Concrete wash-out shall be maintained and shall have signage and shown on erosion control drawings.

## GRADING:

1. Top soil stripping and replacement: Top soil stripping shall be incorporated into landscape areas outside overbuilt pads, in street parkways, medians, open space, earthen drainage ditches and swales for all subdivisions. A minimum of four inches (4") of topsoil shall be placed in advance of grassing operations. The grading operations shall accommodate topsoil to be placed in the designated areas. Stockpiled topsoil shall be protected from erosion with appropriate erosion control measures at all time. Once the excess material has been placed and compacted, the top soil shall be evenly redistributed on top of the placed fill before being re-vegetated.
2. Re-grading work shall be closely coordinated with the owner and engineer before and as the work is being accomplished. Once started, the work shall be proceeded with diligence until complete.
3. All new work shall slope uniformly between spot elevations unless noted otherwise. Provide positive drainage on all finish grades.
4. In areas to be filled, all trees, stumps, brush, abandoned structures, roots, topsoil, vegetation, sediments, large rock fragments, rubbish and any other undesirable or deleterious matter shall be properly removed and disposed off. All top soil, roots and other vegetation and loose or soft soils shall be stripped to a depth of six inches (6") or to the extent practical. It is recommended that trees scheduled for removal in the vicinity of proposed slab-on-grade foundations be removed as far in advance of slab construction as possible. This will tend to restore a more favorable soil moisture equilibrium which will in turn minimize the potential for greater than anticipated post-construction ground movements. Trees should be excavated to below their root balls. Excavation should be filled with soil similar to the surrounding soil. The fill should be constructed in accordance with the recommendations presented in the preliminary geotechnical investigation.
5. Watering of earthwork placed in fill areas may be necessary to achieve the specified moisture density requirement and to germinate/sustain grass cover in areas to receive a vegetative cover after grading is complete. The contractor may request for a fire hydrant meter from the town for construction water use or obtain water from an alternate source. No extra payment will be made to the contractor for water.
6. Contractors are directed to ensure that all swales as shown on the grading plans are properly installed. At locations where retaining walls exist and/or are proposed behind, beside or between lots, swales must be created on the upper lot directly behind the wall and on the lower lot adjacent to the wall where shown to convey surface drainage in the direction shown on the grading plan.

## ESTABLISHMENT OF GROUND COVER

1. Eighty percent (80%) evenly distributed ground cover, without large bare areas, shall be established after the designated areas have been completed to the lines, grades and cross sections shown on the plans and prior to final acceptance.
2. Prior to planting, contractor shall provide the town engineer, or his designee, with the State of Texas certificate stating analysis of purity and germination of seed (certificate of purity).
3. Planting season and application rates: all planting shall be done between the dates specified in table 1, for each grass type except when specifically authorized in writing. The seeds planted per acre shall be of a type specified with the mixture, rate and planting dates as shown in the table 1, or as specified by the engineer.
4. Seeded areas shall be maintained, including watering and mowing, at such time and in a manner and quality to establish a minimum eighty percent (80%) evenly distributed ground cover.
5. In lieu of silt fences, the contractor shall use temporary erosion control matting and/or mulching perimeter guard to stabilize disturbed soil area.
6. Erosion control mats used against paved areas shall have a width of no less than eight feet (8'). No hay products shall be used.
7. All material incorporated in the construction shall be new.

Table 1. Seeding Turfgrass

| Type | Planting Season | Seed and Rate |
|---|---|---|
| Type I | March through September | Bermuda grass, Hulled 50-LB (22.7-KG ) Pls per acre |
| Type II | October through February | Rye grass, 100-LB (45.4-KG) pls per acre combined with Bermuda grass, Hulled 20-LB (9.1-KG ) pls per acre.1 |
| Other | As specified on plans | As specified on plans |

[1]PLS - Pure Live Seed is determined by multiplying the gross weight times purity times the germination [For example, a 100-lb bag with 85% purity and 80% germination. (PLS=pounds in bag x Purity x germination) 100 x 0.85 x 0.8 = 60.8 -lbs of pure live seed.)

## STORM SEWER

1. The contractor shall field verify the vertical and horizontal locations of all existing utilities prior to start of construction. The contractor shall notify the design engineer immediately if any conflict is discovered.
2. Contractor shall verify and coordinates all dimensions shown, including the horizontal and vertical location of curb inlets and all utilities crossing the storm sewer.
3. In event where a water line crosses an inlet, the water line shall be deflected as recommended by manufacturer.

## TREE PRESERVATION

1. Prior to construction, the contractor or subcontractor shall construct and maintain a protective fence at the drip line of all protected existing trees, bushes, landscaping plants, sprinklers and lawns unless noted otherwise on the construction drawings. Any damage to existing trees, landscaping plants, sprinklers and lawns caused by construction shall be replaced to the satisfaction of the Town at the contractor's expense.
2. All protective measures shall be in place prior to commencement of any site or grading work and remain in place until all exterior work has been completed.
3. The Town shall be contacted to approve the placement of the tree preservation fencing prior to beginning of site work on the property.
4. The following activities shall be prohibited within the limits of the primary root zone: material storage, liquid disposal, equipment storage and cleaning. Attachments of signs or wires on trees and construction equipment/ vehicular traffic are also prohibited.
5. Unless specifically allowed, no grade changes shall be allowed within the limits of the primary root zone of any protected tree unless the Town approves adequate construction methods.
6. No trimming of trees may occur within the tree preservation fencing limits without prior consent of the Town.

## WATER

1. Refer to City of Farmers Branch notes for portion of water line located in Farmers Branch.
2. PVC water pipe shall not be stored onsite without approval from the Town.
3. All fittings and appurtenances shall be manufactured in the United States.
4. Hot tap sleeves shall not be used unless approved otherwise. In event of its approval, a stainless steel sleeve shall be used.
5. Valve extensions shall only be used under approved conditions.
6. Where specified name brands are indicated, products of equal or better quality may be considered for approval upon submittal of all supporting data to the Town engineer for review.
7. All material incorporated in the construction shall be new.

| No. | REVISIONS | DATE | BY |
|---|---|---|---|
| | | | |

PROJECT NO. 2021-01C/ BID NO. 21-69

Kimley»Horn
2201 WEST ROYAL LANE, SUITE 275, IRVING, TX 75063
PHONE: 214-420-5600
WWW.KIMLEY-HORN.COM
© 2021 KIMLEY-HORN AND ASSOCIATES, INC.
TEXAS REGISTERED ENGINEERING FIRM #F-928

9/10/2021

STATE OF TEXAS
RYAN DELMOTTE
114242
LICENSED
PROFESSIONAL ENGINEER

KHA PROJECT 063543031
DATE 09/10/2021
SCALE AS SHOWN
DESIGNED BY RMD
DRAWN BY CDS
CHECKED BY LNA

# TOWN OF ADDISON
ALPHA ROAD CONN.
FROM FARMERS BRANCH
CREEK TO ALPHA ROAD

# GENERAL NOTES
TOWN OF ADDISON

SHEET NUMBER
C0.05

Plotted By:Walter, Austin, September 10, 2021 01:53:20pm K:\LaC_Civil\063543031_Addison_Alpha_Road_Connection\C400\Plan Sheets\Sheet Index.dgn
This document, together with the concepts and designs presented herein, as an instrument of service, is intended only for the specific purpose and client for which it was prepared. Reuse of and improper reliance on this document without written authorization and adaptation by Kimley-Horn and Associates, Inc. shall be without liability to Kimley-Horn and Associates, Inc.

Date Updated: September 15, 2020

## GENERAL NOTES

1. All construction shall conform to the requirements of the **"STANDARD SPECIFICATIONS FOR PUBLIC WORKS CONSTRUCTION"** by North Central Texas Council of Governments (NCTCOG) 2017 (Fifth Edition), and amendments thereto and in accordance with the City of Farmers Branch construction specifications and standard details. Contractor is responsible for obtaining a copy of the above-mentioned specifications and details and having on the job site.

2. **THE CONTRACTOR** shall provide "As Built" plans to **THE ENGINEER** so that the reproducible sheets of the engineering plans may be corrected to reflect "As Built" conditions. **THE ENGINEER** shall furnish one set of mylar reproducible plans, a PDF set and AutoCAD drawing file reflecting the "As Built" conditions, to the City prior to final acceptance of the work.

3. **THE CONTRACTOR** shall not stockpile material contiguous to any creek without the written permission of THE **ENGINEER**.

4. **THE CONTRACTOR** shall not allow soils and debris to enter existing inlets. All inlets shall be protected during construction.

5. **THE CONTRACTOR** shall limit his work to the R.O.W. or Easements shown on the drawings. All disturbed/damaged areas outside the construction limits shall be repaired and or replaced at contractor's expense.

6. **THE CONTRACTOR** shall maintain adequate drainage at all times and provide and maintain erosion protection in and adjacent to construction site.

7. All groundwater, seepage, storm water, or water from any source that may occur or accumulate in excavations during the progress of the work shall be removed. All excavations shall be kept entirely free of standing water at all times during the construction work or until otherwise directed by the City. All expense necessary to comply with this requirement shall be borne by the contractor.

8. Areas which have been backfilled to comply with the requirements of paragraph #7, above, but have not been properly compacted, shall be promptly removed at the start of the next working day and compacted in accordance with sections of the specifications.

9. **THE CONTRACTOR** shall not dispose wastes or any other materials into streams or waterways. Excess material shall be hauled away each day and not be allowed to accumulate.

10. **THE CONTRACTOR** shall not burn or bury rubbish and waste materials on project site.

11. **THE CONTRACTOR** shall wet down dry materials to allay dust and prevent blowing dust.

12. All dimensions shown on the plans are to back of curb and/or to the centerline of pipe, unless noted otherwise.

13. **THE CONTRACTOR** will be responsible for notifying **THE ENGINEER**, the Traffic Engineer, the Police and Fire Departments at least 24 hours in advance when any roadway will be closed or reopened.

14. **THE CONTRACTOR** shall be required to provide and maintain all necessary warning and safety devices (flashing lights, barricades, signs, etc. in conformance with the **Texas Manual on Uniform Traffic Control Devices**) to protect public safety and health until the work has been completed and accepted by **THE CITY**.

15. The locations of existing utilities and structures shown on these plans are approximate and the completeness and the accuracy of this data is not guaranteed. It is the responsibility of **THE CONTRACTOR** to locate and verify in the field any utilities and structures that may conflict with the construction of the project. Any utilities and/or structures damaged during the construction of the project shall be repaired at the contractor's expense. At least 24 hours prior to beginning construction in the vicinity of existing underground utilities, **THE CONTRACTOR** shall notify the following, as applicable:

City of Farmers Branch 972-247-3131
Public Works Department 972-919-2597
Utilities Department 972-919-2597
TRA..... 817-493-5100
Oncor Electric Delivery
Line Location Service (Digtess)1-800-344-8377
Emergencies . . . . . 1-888-313-4747
Atmos Energy
Line Location Service (Digtess)1-800-344-8377
Emergencies . . . . . 1-800-817-8090
Time Warner Cable
Line Location Service (Digtess) 1-800-344-8377
Emergencies . . . . . 1-877-833-6350 (Option2)
A.T. & T. 1-800-245-4545
Line Location Service (Digtess) 1-800-344-8377
Emergencies . . . . . 214-458-8879

The Public Works Department, Utility Division (972.919-2597), shall to be contacted to locate City-owned water lines and sanitary sewer lines. The Parks and Recreation Department (972.919-2620) shall be contacted to locate City-owned irrigation lines and electric (lighting) lines. The Public Works Department, Streets Division (972.919-2597) shall to be contacted to locate City-owned fiber optic lines and traffic signal lines.

When the City-owned lines are located by any City department, the locates shall be considered valid up to two weeks, after which new locates shall be required. Unless the lines are physically uncovered, surface locates of City-owned lines shall be considered to be approximate. For any facilities that are to be constructed within 3 feet of the surface locates, additional subsurface investigation should be considered to ensure that the City-owned lines are appropriately located.

16. Contractor must have a set of plans with red stamp stating "Released For Construction" on the project at all times.

17. Product Manufacturer's name(s) and/or model numbers are used herein to set a standard of quality and are not intended to be a restraint of trade or prevent submittals of other manufacturer's products of equal quality and equal colors, for products so mentioned.

18. Should any part of a concrete pavement panel be removed for utility line installation, the entire panel shall be replaced except otherwise directed by **THE ENGINEER**.

19. Existing regulatory signs and street designation signs in conflict within the construction limits shall be removed and relocated or removed, salvaged, and replaced by the Contractor as directed by the Engineer. Cost of removal and relocation of permanent and temporary signs shall be subsidiary to other items of the project. Sign removal, replacement and relocation shall include foundation, post, sign panel and associated labor cost.

20. Contractor shall maintain continuous all weather access into and out of the subdivision, to local streets, and to and from each residence during the construction.

21. Work may not be backfilled or covered until it has been inspected by the City Inspector.

22. Any work indicated on the plans that does not have a specific pay item shall be considered subsidiary to related pay items

**23.** **THE CONTRACTOR** shall provide the City a Maintenance Bond that covers all constructed public works infrastructure as shown on these plans. Maintenance Bond shall be for a period of one year from acceptance of project by the City and shall be in an amount of 100% of the cost of said infrastructure. Bond shall be prepared by a Surety authorized to do business in the State of Texas.

24. All boring in City of Farmers Branch rights-of-way and easements must be performed with a steerable, traceable boring machine and all pipes 6" and above has to be encased.

**PAVING**

1. All concrete shall be Class 'C' 3600 PSI (six sack mix) compressive strength at 28 days, unless noted otherwise. Fly ash will not be allowed. Reinforcement shall be spaced on 18" centers in both directions. Pavement thickness 8" & above shall have #4 rebar and 7" & below shall use #3 rebar.

2. All joints shall be sawed into the completed concrete pavement surface within 12 hours of placement.

3. Contractor shall baker broom finish all placed concrete as approved by **The Engineer** unless noted otherwise.

4. Contractor shall match all proposed pavement, curb, sidewalk and driveways with existing unless noted otherwise.

5. The cost of elevation adjustment of manholes, valves, cleanouts, irrigation heads, pullboxes and water meters shall be subsidiary to the other items of the project. All meters, valves and manholes requiring adjustment shall be cross-referenced by the Contractor so that they may be easily relocated after paving. All elevation adjustments shall be completed prior to placing the pavement.

6. All dimensions and station locations shown on the plans are to back of curb unless noted otherwise.

7. Removal of existing curb shall be subsidiary to pavement removal pay item.

8. Construction of 6" integral curb on streets shall be subsidiary to street pavement pay item.

9. All sawcuts including longitudinal butt joints & reinforcing steel shall be subsidiary to removal or replacement of pavement pay item.

10. At all streets, alleys, and driveways the Contractor shall construct City of Farmers Branch standard driveway approach with TAS compliant path.

11. Preparation of R.O.W. (NCTCOG item 203.3.) includes but is not limited to removal of existing curb and gutter, driveways, pavements, trees, inlets, manholes, pipes and necessary excavation to proposed grade shown on the plans unless otherwise provided for in a separate bid item.

12. Unclassified excavation (Reference: NCTCOG item 203.4, 203.5) includes all excavation, removal and disposal within the limits of R.O.W. and areas adjacent thereto as shown on the plans.

**CURB PAINTING**

1. The address numbers must be 3 inches, white in color centered within a 5-inch high red color background.

2. When painting an address at one location, it must be placed at the center of the property. When painting an address at two locations, it must be painted on each side of the driveway.

**STORM SEWER**

1. All storm sewer pipe shall be reinforced concrete pipe, Class III, with C+ embedment, unless noted otherwise. Embedment, backfill and compaction is subsidiary to pipe installation.

2. From the time a station for manhole is reached, **THE CONTRACTOR** shall case and cure the manhole and backfill to a drivable surface within fourteen (14) calendar days unless otherwise specified by **THE ENGINEER**.

3. Concrete collar shall be placed at all pipe size changes as per detail and cost is subsidiary to pipe installation.

**TRENCH**

1. All trenching and excavation shall be performed in accordance with OSHA standards. The maximum length of open excavation for trenches shall be limited to 100 linear feet regardless of depth. All trenches that open to traffic shall be plated or backfilled with flexbase or crushed concrete and shall be a drivable surface. A drivable surface shall not be lower than the adjoining/existing drivable surface and not give way when driven on or shall be as determined by **THE ENGINEER**. All the trenches that remain behind barricades do not need to be backfilled. The cost of this backfill is not a separate pay item.

**BACKFILL**

1. Backfill (NCTCOG Section 1, Div. 301) under pavement shall have a uniform density of not less than 95% of the maximum density as determined by ASTM D698. Backfill not under pavement shall have a uniform density of not less than 90% of the maximum density as determined by ASTM D698.

| No. | REVISIONS | DATE | BY |
|---|---|---|---|

PROJECT NO. 2021-01C/ BID NO. 21-69

Kimley»Horn
2201 WEST ROYAL LANE, SUITE 275, IRVING, TX 75063
PHONE: 214-420-5600
WWW.KIMLEY-HORN.COM
© 2021 KIMLEY-HORN AND ASSOCIATES, INC.
TEXAS REGISTERED ENGINEERING FIRM #F-928

9/10/2021

STATE OF TEXAS
RYAN DELMOTTE
114242
LICENSED
PROFESSIONAL ENGINEER

KHA PROJECT 063543031
DATE 09/10/2021
SCALE AS SHOWN
DESIGNED BY RMD
DRAWN BY CDS
CHECKED BY LNA

**TOWN OF ADDISON**
ALPHA ROAD CONN.
FROM FARMERS BRANCH
CREEK TO ALPHA ROAD

GENERAL NOTES
CITY OF FARMERS
BRANCH
SHEET 1 OF 2

SHEET NUMBER
C0.06

Plotted By: Shettigh, Cody Generated: 09/10/2021 08:56:21pm K:\IVG_Dal\063543031_Addison_Alpha_Bryan_Connector\CADD\Pro-Sheets\Sheet Index.dwg
This document, together with the concepts and designs presented herein, as an instrument of service is intended only for the specific purpose and client for which it was prepared. Reuse of and improper reliance on this document without written authorization and adaptation by Kimley-Horn and Associates, Inc. shall be without liability to Kimley-Horn and Associates, Inc.

## BACKFILL

1. Backfill (NCTCOG Section 1, Div. 301) under pavement shall have a uniform density of not less than 95% of the maximum density as determined by ASTM D698. Backfill not under pavement shall have a uniform density of not less than 90% of the maximum density as determined by ASTM D698.

## WATER

1. All water main construction shall conform to the minimum requirements of the **Texas Commission on Environmental Quality (TCEQ)** rules and regulations for public water and sewer systems.
2. Acceptable water main sizes shall be 6" and larger. Water mains less than 6" diameter will not be permitted.
3. All water mains 8" or less shall be DR18, AWWA C900 P.V.C. water pipe. Pipe color shall be blue unless specified otherwise.
4. All 12" water mains shall be DR18 (unless specified otherwise), AWWA C900 P.V.C. water pipe or AWWA C303 RCCP. P.V.C. pipe color shall be blue.
5. All 16" water mains shall be Class 165 (unless specified otherwise), AWWA C905 P.V.C. water pipe or AWWA C303 RCCP. P.V.C. pipe color shall be blue.
6. All water mains larger than 18" shall be AWWA C303 bar-wrapped concrete cylinder pipe.
7. All 4" through 12" resilient seat gate valves shall be Mueller (A-2370-series), EJ Flowmaster or approved equal.
8. All 16" and larger valves shall be Mueller Lineseal iii butterfly valves (B-3211-series-0024) or approved equal.
9. All tapping sleeves shall be Mueller full circle stainless steel or approved equal.
10. All joints shall be mechanical joints with non-corrosive bolts and be equipped w/ mega lug style rings.
11. All water mains shall have a minimum cover of 48" below finished grades.
12. All water mains shall be pressure tested in accordance with the NCTCOG specifications. The contractor shall flush and sterilize all water mains. The city will take water samples and have laboratory tests performed to prove the water mains to be free of bacteria/micro-organisms.
13. The water services that are installed before the completion of street construction shall be laid in the service ditch at the same elevation as the water main or a minimum cover of 30" below top of curb grade. At the proper location for the meter box, the meter (curb) stop shall be raised to 18" below top of curb grade with excess copper tubing to raise the stop at a future date to 8" below top of curb grade.
14. For service connections, use double brass strap service clamp when tapping all pipe.
15. All fire hydrants shall conform to AWWA standard specifications for fire hydrants for ordinary water works service, C-502. Fire hydrants shall be three-way and have a 5 1/4" barrel, 4 1/2" steamer nozzle and 2 1/2" hose nozzles. All hydrants shall be equipped with a breakaway flange. Fire hydrant shall have non-rising stem "O" ring seals and mechanical joint inlet ends.
16. All new Fire Hydrants shall be AVK 2780, Mueller Super Centurion 250, M&H Model 129, or approved equal. All Fire Hydrants shall be powder coated RAL 3020 Traffic Red in color.
17. Hose/Pumper nozzles on fire hydrants shall be 18" to 24" above the top of curb, or finished grade, and shall face the streets or firelane. Fire hydrant shall be placed not less than 3' nor more than 6' behind the curb. Set fire hydrant on the lot line extended and/or at curb return of street intersection. Fire hydrant shall be no closer than 18" to existing or proposed sidewalks. Standard bury depth of fire hydrant is 4'. Actual valve location will depend on location of water main.
18. Embedment shall be Embedment B+ Per NCTCOG Embedment Detail 3020 unless noted otherwise on plans and is not a separate pay item.
19. For Thrust Block use NCTCOG 4010A-4040 Details and is not a separate pay item.
20. For pavement cuts use NCTCOG 3070 Detail.
21. All service fittings shall be brass w/ compression style fittings.
22. All valve stacks located in unimproved areas shall have 24"x24"x12" concrete pad.
23. All tees shall be M.J. x Flange and equipped with appropriate flanged valve (Unless specified otherwise).
24. All 1" and 2" taps shall be made on 45 degree angles.
25. Water meter boxes for size 1" or smaller shall be "DFW" (DFW37C-12-1BA) with brass key lock or approved equal.
26. Water meter boxes for size 1 1/2" to 2" shall be "DFW" (DFW65C-14-1BA) with brass key lock or approved equal.
27. Cutting & plugging of existing water mains are subsidiary to water main installation unless specified otherwise.
28. All fittings including but not limited to plugs, tees, bends, reducers, caps etc are subsidiary to the water main installation item unless specified otherwise.
29. All fittings shall be Compact Ductile Iron meeting AWWA C153. Fittings shall be domestically manufactured.
30. Water meters shall be Badger, Hersey, or a brand approved by the City and must be potted for ITRON 100W+end points. Splicing is not acceptable. The cost of all new water meters and the installation shall be borne by the water service applicant/developer/owner of the property and shall include the required ITRON 100W+end points. The applicant/developer/owner shall install or cause to be installed the water meter and shall also provide the City of Farmers Branch Public Works Department, Utility Division with the above approved ITRON end point to be installed by the City. Upon complete installation of water meter by the applicant/developer/owner, and installation of the end point by the City of Farmers Branch, the City shall own said equipment.
31. Water valve abandonment: Remove existing valve cover lid, valve cover, valve stack as needed for 12" min. clearance from existing pavement, soil, or proposed pavement (whichever is greater), remove valve stem extension if equipped, and backfill valve stack with min. 2 sack conc. Mix.

## SANITARY SEWER

1. All sanitary sewer mains 6" to 15" shall be ASTM D3034 SDR-26 P.V.C. gravity sewer pipe. Pipe color shall be green.
2. All sanitary sewer mains 18" to 27" shall be ASTM F679 (Type 1) PS115 P.V.C. gravity sewer pipe. Pipe color shall be green.
3. All sanitary sewer mains larger than 27" shall be RCP ASTM C76 of minimum strength class III. All joints to be rubber o_ring gasket type conforming to ASTM C443.
4. All sanitary sewers shall be air tested in accordance with the NCTCOG specifications and Mandrel.
5. All sanitary sewers shall be televised in the presence of The City Inspector and a video tape shall be made and furnished to the city.
6. All sanitary sewer service laterals (4") shall be schedule 40 Poly Vinyl Chloride (PVC) pipe.
7. Embedment shall be Embedment B-2 Per NCTCOG Embedment Detail 3030 unless noted otherwise on plans and is not a separate pay item.
8. For pavement cuts use NCTCOG 3070 Detail with full depth saw cut.
9. Manhole ring and cover shall be Bass & Hays HM ERGO 30XL w/Farmers Branch Logo or approved equal.
10. All Sanitary Sewer Manholes shall be vacuum tested in the presence of The City Inspector.
11. Cutting & plugging of existing sewer mains are subsidiary to sewer main installation item unless specified otherwise.
12. All fittings including but not limited to plugs, tees, crosses, bends, reducers, caps etc are subsidiary to the sewer main installation item unless specified otherwise.

## IRRIGATION & LANDSCAPE

1. All existing irrigation shall be considered to remain unless noted otherwise. Damage to existing irrigation shall be repaired/replaced at the contractor's expense. Damage to existing irrigation systems shall be repaired within 24 hours.
2. Existing irrigation heads to be relocated are to be set 4" from edge of pavement or back of curb. Set heads flush with finished grade.
3. All landscaping in rights_of_way or easements shall be approved by **THE ENGINEER** prior to construction.
4. Damage to existing landscape to remain shall be replaced with like kind and size at the contractor's expense.

## SOD

1. All sodding shall be accomplished with the type of turf which matches the existing sod, or as specified in the plans or specifications.
2. All turf areas disturbed by work shall be sodded unless otherwise noted on the plans. Payment shall be made for work required inside grading limits and construction limits as shown on plans. All turf areas disturbed outside these limits shall be the responsibility of **THE CONTRACTOR** and shall be sodded at the contractor's expense. All sodding shall adhere to requirements of City of Farmers Branch standard Specifications for Turf Establishment / Solid Sod.

## TREES

1. **THE CONTRACTOR** is to exercise extreme caution during all phases of the project to protect existing trees and shrubs. Contractor shall be responsible for replacement of any trees and shrubs damaged that was not indicated to be removed during the construction. Contractor shall fully remove the trees indicated on the plans to be removed. Damaged tree roots shall be saw cut.

| No. | REVISIONS | DATE | BY |
|---|---|---|---|

PROJECT NO. 2021-01C/ BID NO. 21-69

Kimley»Horn
2201 WEST ROYAL LANE, SUITE 275, IRVING, TX 75063
PHONE: 214-420-5600
WWW.KIMLEY-HORN.COM
© 2021 KIMLEY-HORN AND ASSOCIATES, INC.
TEXAS REGISTERED ENGINEERING FIRM #F-928

9/10/2021

STATE OF TEXAS
RYAN DELMOTTE
114242
LICENSED
PROFESSIONAL ENGINEER

KHA PROJECT 063543031
DATE 09/10/2021
SCALE AS SHOWN
DESIGNED BY RMD
DRAWN BY CDS
CHECKED BY LNA

**TOWN OF ADDISON**
ALPHA ROAD CONN.
FROM FARMERS BRANCH CREEK TO ALPHA ROAD

GENERAL NOTES
CITY OF FARMERS BRANCH
SHEET 2 OF 2

SHEET NUMBER
C0.07

Plotted By: Christian Cody September 08, 2021 08:56:01pm K:\LAC_Civil\063543031-Addison Alpha Road Connector\CAD\Plan\Sheet\Sheet Index.dwg
This document, together with the concepts and designs presented herein, as an instrument of service, is intended only for the specific purpose and client for which it was prepared. Reuse of and improper reliance on this document without written authorization and adaptation by Kimley-Horn and Associates, Inc. shall be without liability to Kimley-Horn and Associates, Inc.

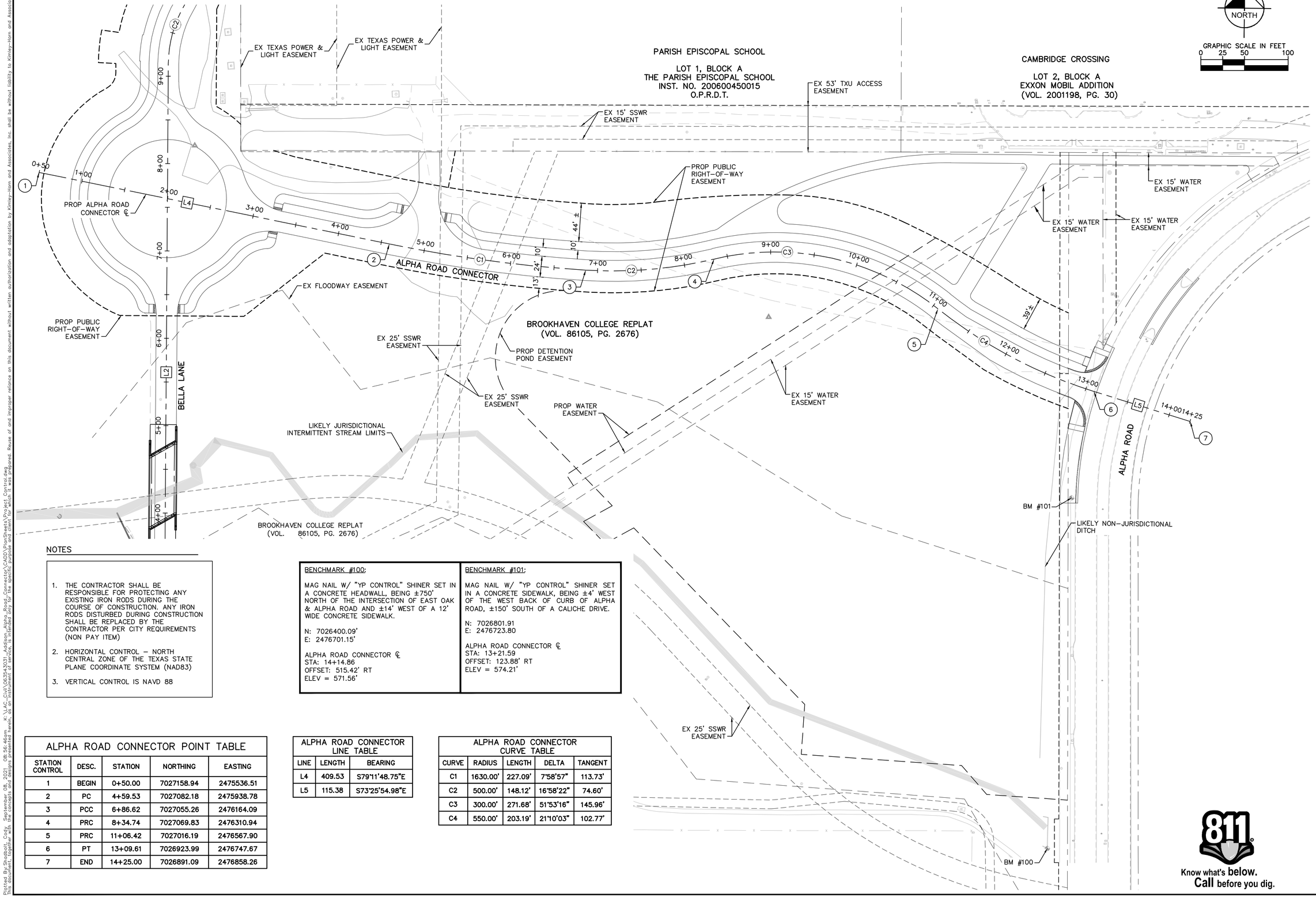


NOTES

1. THE CONTRACTOR SHALL BE RESPONSIBLE FOR PROTECTING ANY EXISTING IRON RODS DURING THE COURSE OF CONSTRUCTION. ANY IRON RODS DISTURBED DURING CONSTRUCTION SHALL BE REPLACED BY THE CONTRACTOR PER CITY REQUIREMENTS (NON PAY ITEM)
2. HORIZONTAL CONTROL – NORTH CENTRAL ZONE OF THE TEXAS STATE PLANE COORDINATE SYSTEM (NAD83)
3. VERTICAL CONTROL IS NAVD 88

BENCHMARK #100:

MAG NAIL W/ "YP CONTROL" SHINER SET IN A CONCRETE HEADWALL, BEING ±750' NORTH OF THE INTERSECTION OF EAST OAK & ALPHA ROAD AND ±14' WEST OF A 12' WIDE CONCRETE SIDEWALK.

N: 7026400.09'
E: 2476701.15'

ALPHA ROAD CONNECTOR ℄
STA: 14+14.86
OFFSET: 515.42' RT
ELEV = 571.56'

BENCHMARK #101:

MAG NAIL W/ "YP CONTROL" SHINER SET IN A CONCRETE SIDEWALK, BEING ±4' WEST OF THE WEST BACK OF CURB OF ALPHA ROAD, ±150' SOUTH OF A CALICHE DRIVE.

N: 7026801.91
E: 2476723.80

ALPHA ROAD CONNECTOR ℄
STA: 13+21.59
OFFSET: 123.88' RT
ELEV = 574.21'

ALPHA ROAD CONNECTOR POINT TABLE

| STATION CONTROL | DESC. | STATION | NORTHING | EASTING |
|---|---|---|---|---|
| 1 | BEGIN | 0+50.00 | 7027158.94 | 2475536.51 |
| 2 | PC | 4+59.53 | 7027082.18 | 2475938.78 |
| 3 | PCC | 6+86.62 | 7027055.26 | 2476164.09 |
| 4 | PRC | 8+34.74 | 7027069.83 | 2476310.94 |
| 5 | PRC | 11+06.42 | 7027016.19 | 2476567.90 |
| 6 | PT | 13+09.61 | 7026923.99 | 2476747.67 |
| 7 | END | 14+25.00 | 7026891.09 | 2476858.26 |

ALPHA ROAD CONNECTOR LINE TABLE

| LINE | LENGTH | BEARING |
|---|---|---|
| L4 | 409.53 | S79°11'48.75"E |
| L5 | 115.38 | S73°25'54.98"E |

ALPHA ROAD CONNECTOR CURVE TABLE

| CURVE | RADIUS | LENGTH | DELTA | TANGENT |
|---|---|---|---|---|
| C1 | 1630.00' | 227.09' | 7°58'57" | 113.73' |
| C2 | 500.00' | 148.12' | 16°58'22" | 74.60' |
| C3 | 300.00' | 271.68' | 51°53'16" | 145.96' |
| C4 | 550.00' | 203.19' | 21°10'03" | 102.77' |

811 Know what's below. Call before you dig.

PROJECT NO. 2021-01C/ BID NO. 21-69

| No. | REVISIONS | DATE | BY |
|---|---|---|---|
| | | | |

Kimley»Horn
2201 WEST ROYAL LANE, SUITE 275, IRVING, TX 75063
PHONE: 214-420-5600
WWW.KIMLEY-HORN.COM
© 2021 KIMLEY-HORN AND ASSOCIATES, INC.
TEXAS REGISTERED ENGINEERING FIRM #F-928

9/10/2021

STATE OF TEXAS
RYAN DELMOTTE
114242
LICENSED
PROFESSIONAL ENGINEER

| | |
|---|---|
| KHA PROJECT | 063543031 |
| DATE | 09/10/2021 |
| SCALE | AS SHOWN |
| DESIGNED BY | RMD |
| DRAWN BY | CDS |
| CHECKED BY | LNA |

**TOWN OF ADDISON**
ALPHA ROAD CONN.
FROM FARMERS BRANCH
CREEK TO ALPHA ROAD

PROJECT CONTROL
ALPHA ROAD
CONNECTOR

SHEET NUMBER
C1.01

Plotted By: Shadbolt, Cody September 08, 2021 08:56:46am
K:\LAC_Civil\063543031_Addison_Alpha_Road_Connector\CADD\PlanSheets\Project Control.dwg
This document, together with the concepts and designs presented herein, as an instrument of service, is intended only for the specific purpose and client for which it was prepared. Reuse of and improper reliance on this document without written authorization and adaptation by Kimley-Horn and Associates, Inc. shall be without liability to Kimley-Horn and Associates, Inc.

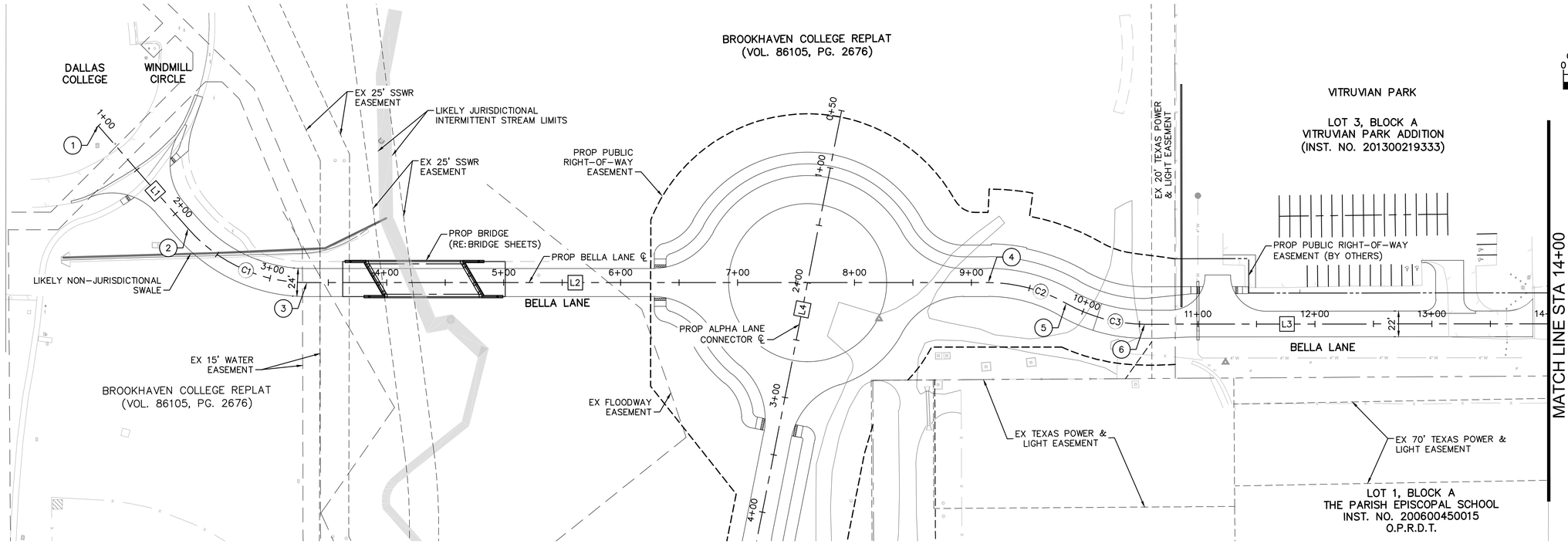


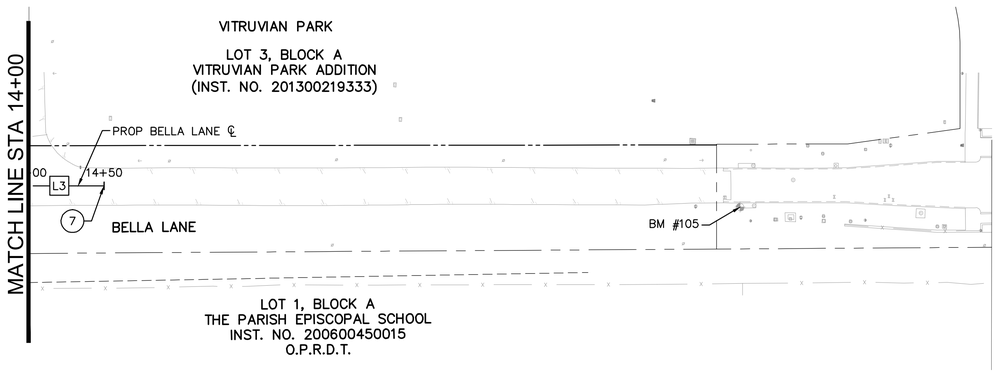


| BELLA LANE POINT TABLE | | | | |
|---|---|---|---|---|
| STATION CONTROL | DESC. | STATION | NORTHING | EASTING |
| 1 | BEGIN | 1+00.00 | 7026523.46 | 2475553.51 |
| 2 | PC | 2+16.71 | 7026600.81 | 2475640.90 |
| 3 | PT | 3+31.79 | 7026702.74 | 2475686.42 |
| 4 | PC | 9+14.21 | 7027285.14 | 2475682.80 |
| 5 | PRC | 9+84.28 | 7027352.22 | 2475700.17 |
| 6 | PT | 10+54.49 | 7027419.43 | 2475717.53 |
| 7 | END | 14+50.00 | 7027814.94 | 2475714.69 |

| BELLA LINE TABLE | | |
|---|---|---|
| LINE | LENGTH | BEARING |
| L1 | 116.71 | N48°29'09.69"E |
| L2 | 582.42 | N0°21'20.59"W |
| L3 | 395.52 | N0°24'43.38"W |

| BELLA CURVE TABLE | | | | |
|---|---|---|---|---|
| CURVE | RADIUS | LENGTH | DELTA | TANGENT |
| C1 | 135.00' | 115.08' | 48°50'30" | 61.30' |
| C2 | 135.00' | 70.07' | 29°44'23" | 35.84' |
| C3 | 135.00' | 70.21' | 29°47'46" | 35.92' |

BENCHMARK #105:

MAG NAIL W/ "YP CONTROL" SHINER SET IN THE SOUTHEAST CORNER OF A CURB INLET, BEING ±169' SOUTH OF THE SOUTH BRIDGE ABUTMENT ON BELLA LANE AND BEING ±14' EAST OF THE CENTERLINE OF BELLA DRIVE.

N: 7028234.53'
E: 2475726.23'

BELLA LANE ℄
STA:
OFFSET: XX.XX' RT
ELEV = 561.04'

NOTES:

1. THE CONTRACTOR SHALL BE RESPONSIBLE FOR PROTECTING ANY EXISTING IRON RODS OR MONUMENTS DURING THE COURSE OF CONSTRUCTION. ANY IRON RODS DISTURBED DURING CONSTRUCTION SHALL BE REPLACED BY THE CONTRACTOR PER TOWN REQUIREMENTS (NON-PAY ITEM).
2. HORIZONTAL CONTROL- NORTH CENTRAL ZONE OF THE TEXAS STATE PLANE COORDINATE SYSTEM (NAD83).
3. VERTICAL CONTROL IS NAVD 88.

Know what's **below.**
**Call** before you dig.

| No. | REVISIONS | DATE | BY |
|---|---|---|---|
| | | | |

PROJECT NO. 2021-01C/ BID NO. 21-69

Kimley»Horn
2201 WEST ROYAL LANE, SUITE 275, IRVING, TX 75063
PHONE: 214-420-5600
WWW.KIMLEY-HORN.COM
© 2021 KIMLEY-HORN AND ASSOCIATES, INC.
TEXAS REGISTERED ENGINEERING FIRM #F-928

9/10/2021

STATE OF TEXAS
RYAN DELMOTTE
114242
LICENSED PROFESSIONAL ENGINEER

| KHA PROJECT 063543031 | DATE 09/10/2021 | SCALE AS SHOWN | DESIGNED BY RMD | DRAWN BY CDS | CHECKED BY LNA |
|---|---|---|---|---|---|

**TOWN OF ADDISON**
ALPHA ROAD CONN.
FROM FARMERS BRANCH CREEK TO ALPHA ROAD

PROJECT CONTROL
BELLA LANE

SHEET NUMBER
C1.02

Plotted By: Snodbolt, Cody September 08, 2021 08:56:48am K:\LAC_Civil\063543031_Addison_Alpha_Road_Connector\CADD\PlanSheets\Project Control.dwg
This document, together with the concepts and designs presented herein, as an instrument of service, is intended only for the specific purpose and client for which it was prepared. Reuse of and improper reliance on this document without written authorization and adaptation by Kimley-Horn and Associates, Inc. shall be without liability to Kimley-Horn and Associates, Inc.

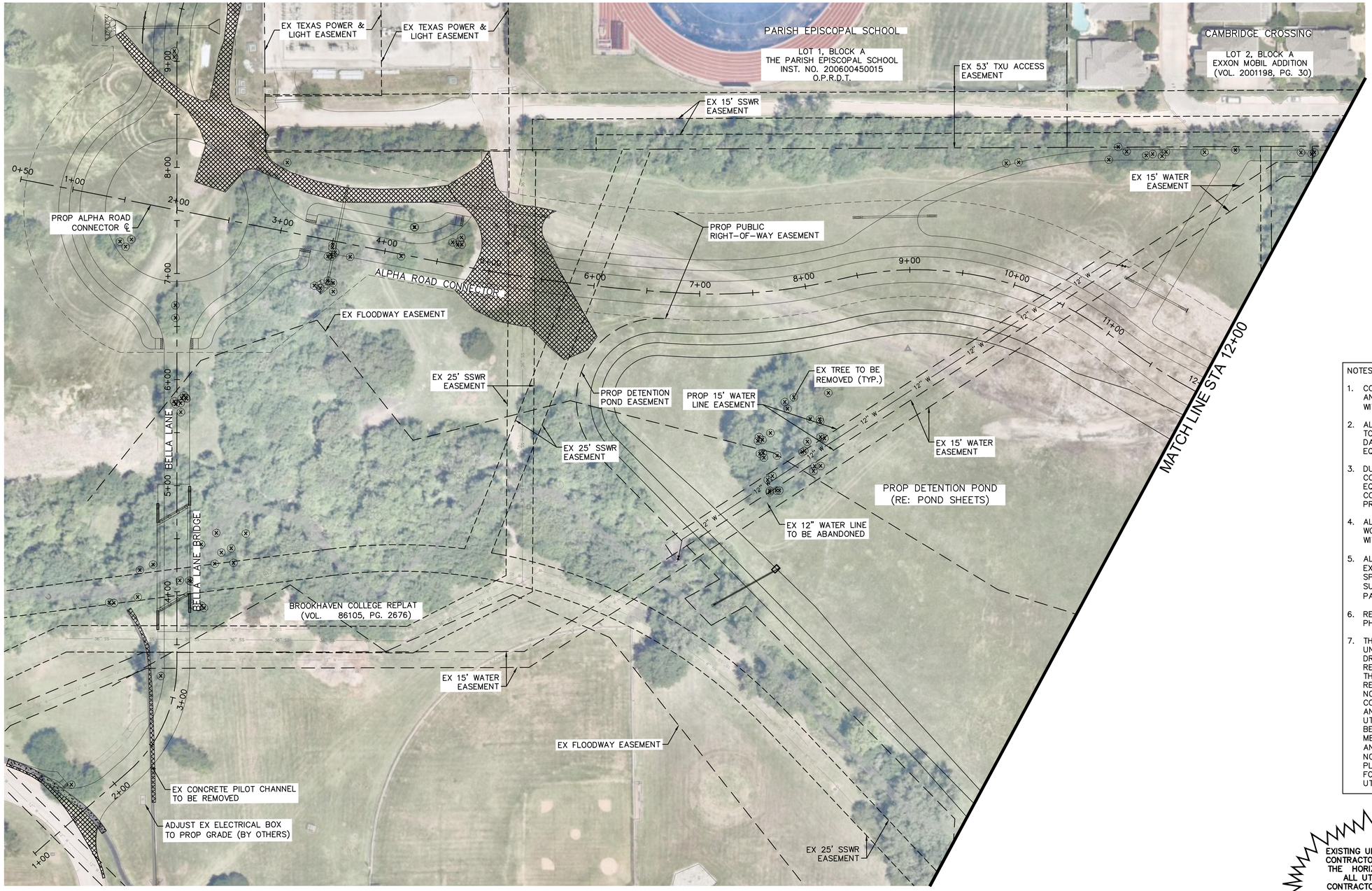


NORTH

GRAPHIC SCALE IN FEET
0 25 50 100

LEGEND

- EX ROW
- 12" W — EX 12" WATER
- 8" SS — EX 8" SANITARY SEWER
- 15" SS — EX 8" SANITARY SEWER
- 18" SS — EX 18" SANITARY SEWER
- 36" SS — EX 18" SANITARY SEWER
- EX STORM DRAIN
- UGE — EX UNDERGROUND ELECTRIC
- G — EX GAS
- OHE — EX OVERHEAD ELECTRIC
- EX TREE TO REMAIN
- EX TREE TO BE REMOVED
- CONCRETE PAVEMENT, GRAVEL, DIRT AND ASPHALT TO BE REMOVED
- SIDEWALK AND RAMPS TO BE REMOVED

NOTES:

1. CONTRACTOR IS RESPONSIBLE FOR LOCATING AND RESTORING ALL IRRIGATION FACILITIES WITHIN PROJECT LIMITS (NO SEPARATE PAY).
2. ALL LANDSCAPING AND TREES NOT INDICATED TO BE REMOVED SHALL BE PROTECTED. IF DAMAGED, CONTRACTOR SHALL RESTORE TO EQUAL OR BETTER CONDITION.
3. DUE TO TREE LIMB HEIGHT LIMITATIONS, CONTRACTOR SHALL INSPECT AREA FOR EQUIPMENT CLEARANCE. IN THE EVENT OF A CONFLICT, CONTRACTOR SHALL NOTIFY TOWN PRIOR TO CONSTRUCTION.
4. ALL TREE ROOTS IN CONFLICT WITH PROPOSED WORK SHALL BE STRAIGHT CUT AND TREATED WITH PRUNING PAINT (NO SEPARATE PAY).
5. ALL DAMAGE AND/OR REPLACEMENT TO EXISTING DECORATIVE WALK WAYS NOT SPECIFICALLY NOTED IN THE PLANS SHALL BE SUBSIDIARY TO ANY BID ITEM (NO SEPARATE PAY).
6. REFER TO TRAFFIC CONTROL SHEETS FOR PHASING.
7. THE EXISTENCE AND LOCATIONS OF ALL UNDERGROUND UTILITIES SHOWN ON THE DRAWINGS WERE OBTAINED FROM AVAILABLE RECORDS AND ARE APPROXIMATE. NEITHER THE OWNER NOR THE ENGINEER ASSUMES ANY RESPONSIBILITY FOR UTILITIES NOT SHOWN OR NOT IN THE LOCATION SHOWN. THE CONTRACTOR SHALL DETERMINE THE DEPTH AND LOCATION OF EXISTING UNDERGROUND UTILITIES PRIOR TO EXCAVATION AND SHALL BE REQUIRED TO TAKE ANY PRECAUTIONARY MEASURES TO PROTECT ALL LINES SHOWN AND/ OR ANY OTHER UNDERGROUND UTILITIES NOT OF RECORD OR NOT SHOWN ON THE PLANS. CONTRACTOR SHALL BE RESPONSIBLE FOR CONTACTING ALL FRANCHISE AND TOWN UTILITIES PRIOR TO CONSTRUCTION.

CAUTION!
**EXISTING UNDERGROUND UTILITIES IN THE AREA. CONTRACTOR IS RESPONSIBLE FOR DETERMINING THE HORIZONTAL AND VERTICAL LOCATION OF ALL UTILITIES PRIOR TO CONSTRUCTION. CONTRACTOR SHALL BE RESPONSIBLE FOR ANY REPAIRS TO EXISTING UTILITIES DUE TO DAMAGE INCURRED DURING CONSTRUCTION. CONTRACTOR SHALL IMMEDIATELY NOTIFY THE ENGINEER OF ANY DISCREPANCIES ON THE PLANS.**

811
Know what's **below.**
**Call** before you dig.

| No. | REVISIONS | DATE | BY |
|---|---|---|---|
| | | | |

PROJECT NO. 2021-01C/ BID NO. 21-69


Kimley»Horn
2201 WEST ROYAL LANE, SUITE 275, IRVING, TX 75063
PHONE: 214-420-5600
WWW.KIMLEY-HORN.COM


© 2021 KIMLEY-HORN AND ASSOCIATES, INC.

TEXAS REGISTERED ENGINEERING FIRM #F-928

9/10/2021

STATE OF TEXAS
RYAN DELMOTTE
114242
LICENSED PROFESSIONAL ENGINEER

| KHA PROJECT | DATE | SCALE | DESIGNED BY | DRAWN BY | CHECKED BY |
|---|---|---|---|---|---|
| 063543031 | 09/10/2021 | AS SHOWN | RMD | CDS | LNA |

**TOWN OF ADDISON**
ALPHA ROAD CONN.
FROM FARMERS BRANCH
CREEK TO ALPHA ROAD

REMOVAL PLAN
ALPHA ROAD
CONNECTOR
SHEET 1 OF 2

SHEET NUMBER
C1.03


Plotted By: Staudolt, Cody September 08, 2021 08:57:17am K:\LAC_Civil\063543031_Addison_Alpha_Road_Connector\CADD\PlanSheets\Removal_Plan.dwg
This document, together with the concepts and designs presented herein, as an instrument of service, is intended only for the specific purpose and client for which it was prepared. Reuse of and improper reliance on this document without written authorization and adaptation by Kimley-Horn and Associates, Inc. shall be without liability to Kimley-Horn and Associates, Inc.

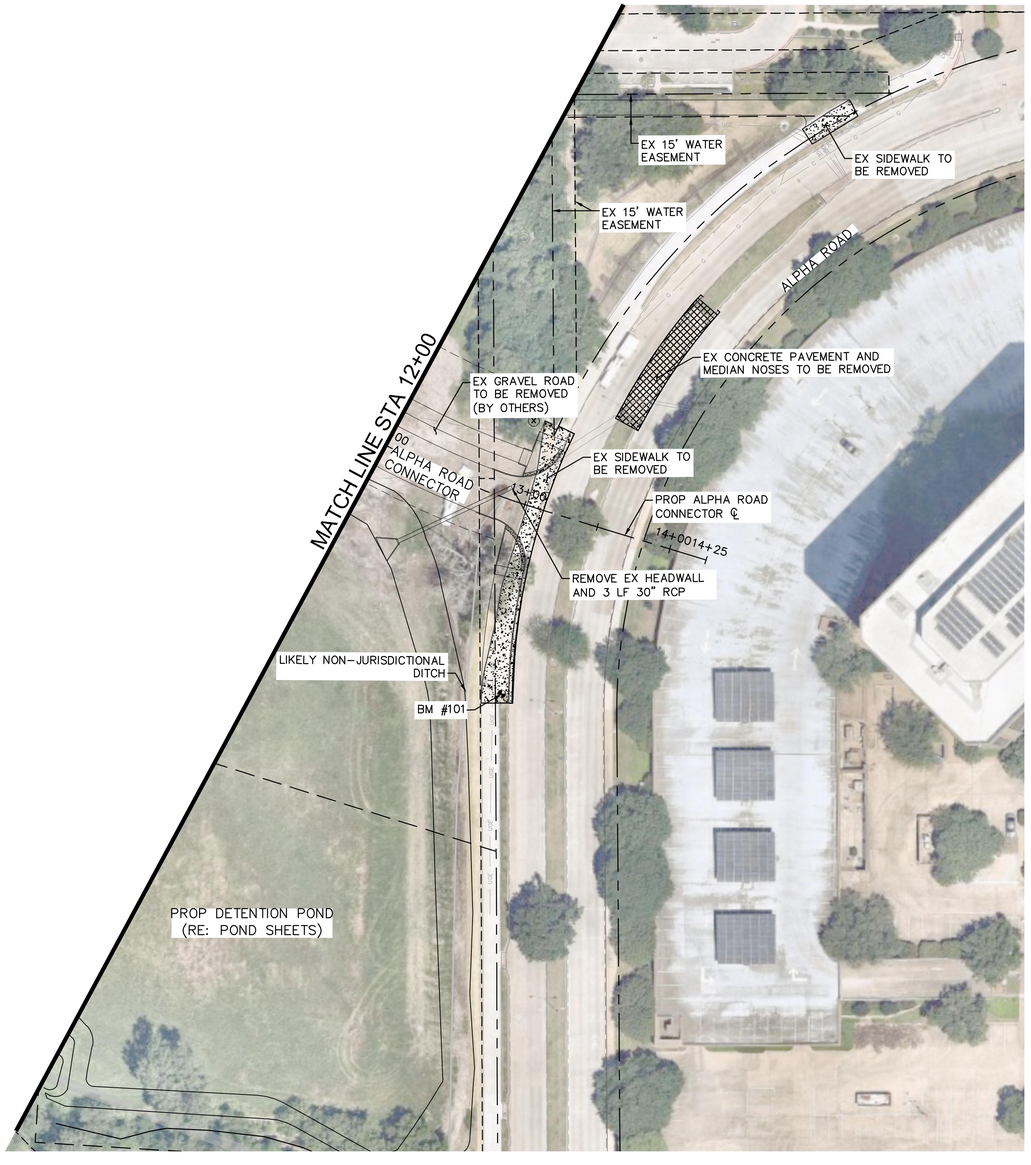





GRAPHIC SCALE IN FEET
0 25 50 100

LEGEND

| | |
|---|---|
| EX ROW | |
| 12" W | EX 12" WATER |
| 8" SS | EX 8" SANITARY SEWER |
| 15" SS | EX 8" SANITARY SEWER |
| 18" SS | EX 18" SANITARY SEWER |
| 36" SS | EX 18" SANITARY SEWER |
| | EX STORM DRAIN |
| UGE | EX UNDERGROUND ELECTRIC |
| G | EX GAS |
| OHE | EX OVERHEAD ELECTRIC |
| | EX TREE TO REMAIN |
| X | EX TREE TO BE REMOVED |
| | CONCRETE PAVEMENT, GRAVEL, DIRT AND ASPHALT TO BE REMOVED |
| | SIDEWALK AND RAMPS TO BE REMOVED |

NOTES:

1. CONTRACTOR IS RESPONSIBLE FOR LOCATING AND RESTORING ALL IRRIGATION FACILITIES WITHIN PROJECT LIMITS (NO SEPARATE PAY).
2. ALL LANDSCAPING AND TREES NOT INDICATED TO BE REMOVED SHALL BE PROTECTED. IF DAMAGED, CONTRACTOR SHALL RESTORE TO EQUAL OR BETTER CONDITION.
3. DUE TO TREE LIMB HEIGHT LIMITATIONS, CONTRACTOR SHALL INSPECT AREA FOR EQUIPMENT CLEARANCE. IN THE EVENT OF A CONFLICT, CONTRACTOR SHALL NOTIFY TOWN PRIOR TO CONSTRUCTION.
4. ALL TREE ROOTS IN CONFLICT WITH PROPOSED WORK SHALL BE STRAIGHT CUT AND TREATED WITH PRUNING PAINT (NO SEPARATE PAY).
5. ALL DAMAGE AND/OR REPLACEMENT TO EXISTING DECORATIVE WALK WAYS NOT SPECIFICALLY NOTED IN THE PLANS SHALL BE SUBSIDIARY TO ANY BID ITEM (NO SEPARATE PAY).
6. REFER TO TRAFFIC CONTROL SHEETS FOR PHASING.
7. THE EXISTENCE AND LOCATIONS OF ALL UNDERGROUND UTILITIES SHOWN ON THE DRAWINGS WERE OBTAINED FROM AVAILABLE RECORDS AND ARE APPROXIMATE. NEITHER THE OWNER NOR THE ENGINEER ASSUMES ANY RESPONSIBILITY FOR UTILITIES NOT SHOWN OR NOT IN THE LOCATION SHOWN. THE CONTRACTOR SHALL DETERMINE THE DEPTH AND LOCATION OF EXISTING UNDERGROUND UTILITIES PRIOR TO EXCAVATION AND SHALL BE REQUIRED TO TAKE ANY PRECAUTIONARY MEASURES TO PROTECT ALL LINES SHOWN AND/ OR ANY OTHER UNDERGROUND UTILITIES NOT OF RECORD OR NOT SHOWN ON THE PLANS. CONTRACTOR SHALL BE RESPONSIBLE FOR CONTACTING ALL FRANCHISE AND TOWN UTILITIES PRIOR TO CONSTRUCTION.

CAUTION!
EXISTING UNDERGROUND UTILITIES IN THE AREA. CONTRACTOR IS RESPONSIBLE FOR DETERMINING THE HORIZONTAL AND VERTICAL LOCATION OF ALL UTILITIES PRIOR TO CONSTRUCTION. CONTRACTOR SHALL BE RESPONSIBLE FOR ANY REPAIRS TO EXISTING UTILITIES DUE TO DAMAGE INCURRED DURING CONSTRUCTION. CONTRACTOR SHALL IMMEDIATELY NOTIFY THE ENGINEER OF ANY DISCREPANCIES ON THE PLANS.

811
Know what's **below.**
**Call** before you dig.

| No. | REVISIONS | DATE | BY |
|---|---|---|---|

PROJECT NO. 2021-01C/ BID NO. 21-69

Kimley»Horn
2201 WEST ROYAL LANE, SUITE 275, IRVING, TX 75063
PHONE: 214-420-5600
WWW.KIMLEY-HORN.COM
© 2021 KIMLEY-HORN AND ASSOCIATES, INC.
TEXAS REGISTERED ENGINEERING FIRM #F-928

9/10/2021

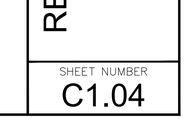


| KHA PROJECT | DATE | SCALE | DESIGNED BY | DRAWN BY | CHECKED BY |
|---|---|---|---|---|---|
| 063543031 | 09/10/2021 | AS SHOWN | RMD | CDS | LNA |

**TOWN OF ADDISON**
ALPHA ROAD CONN.
FROM FARMERS BRANCH CREEK TO ALPHA ROAD

# REMOVAL PLAN
ALPHA ROAD CONNECTOR
SHEET 2 OF 2

SHEET NUMBER
C1.04

Plotted By: Snodbolt, Cody September 09, 2021 01:20:15pm K:\IAC_Civil\063543031_Addison_Alpha_Road_Connector\CADD\PlanSheets\Removal Plan.dwg
This document, together with the concepts and designs presented herein, as an instrument of service, is intended only for the specific purpose and client for which it was prepared. Reuse of and improper reliance on this document without written authorization and adaptation by Kimley-Horn and Associates, Inc. shall be without liability to Kimley-Horn and Associates, Inc.

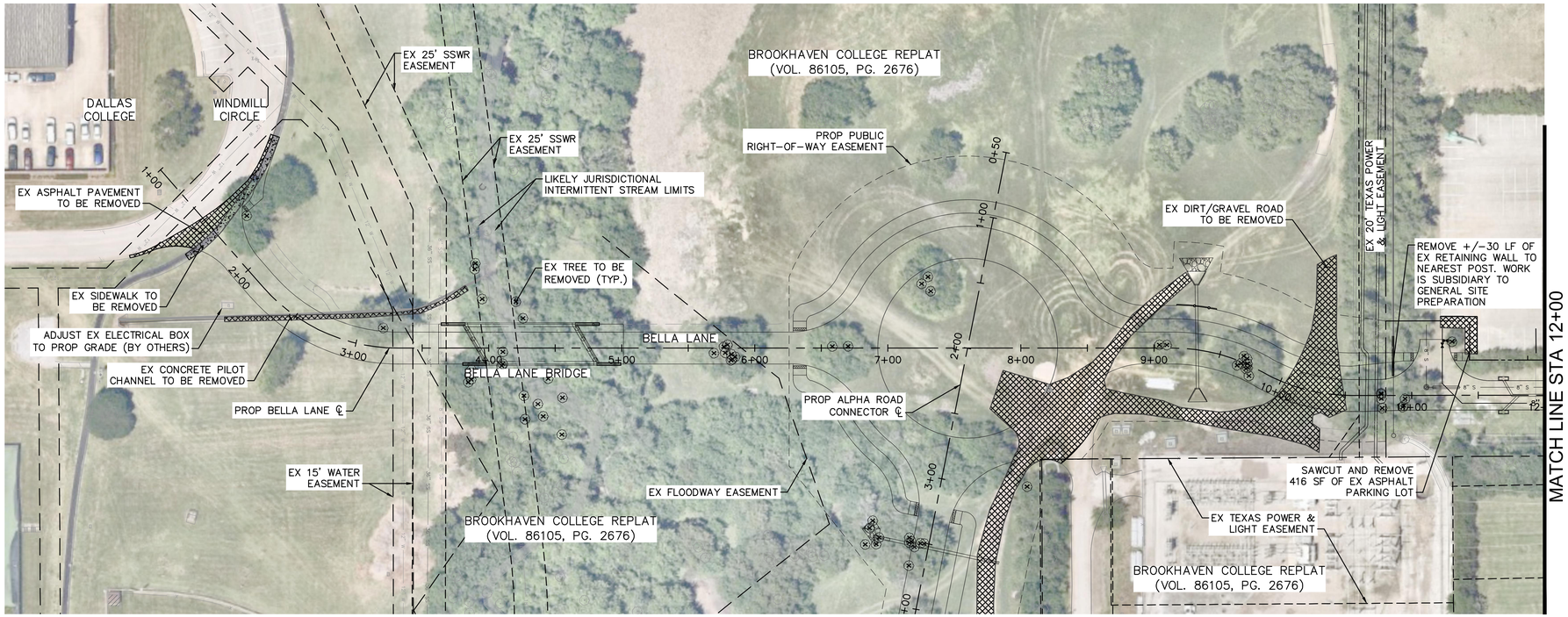


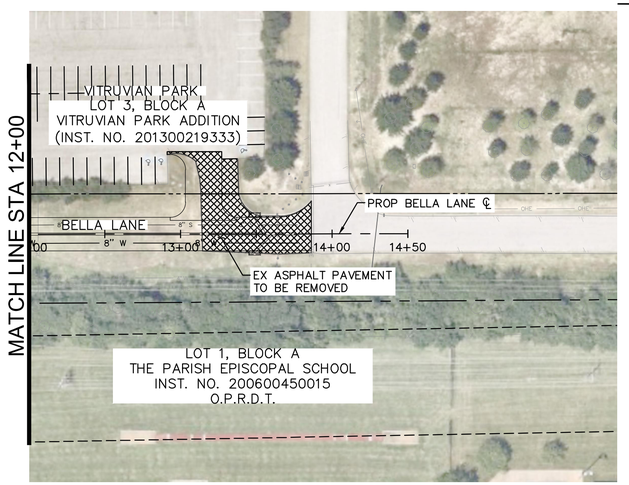


NORTH

GRAPHIC SCALE IN FEET
0 25 50 100

LEGEND

- EX ROW
- 12" W — EX 12" WATER
- 8" SS — EX 8" SANITARY SEWER
- 15" SS — EX 8" SANITARY SEWER
- 18" SS — EX 18" SANITARY SEWER
- 36" SS — EX 18" SANITARY SEWER
- EX STORM DRAIN
- UGE — EX UNDERGROUND ELECTRIC
- G — EX GAS
- OHE — EX OVERHEAD ELECTRIC
- EX TREE TO REMAIN
- EX TREE TO BE REMOVED
- CONCRETE PAVEMENT, GRAVEL, DIRT AND ASPHALT TO BE REMOVED
- SIDEWALK AND RAMPS TO BE REMOVED

NOTES:

1. CONTRACTOR IS RESPONSIBLE FOR LOCATING AND RESTORING ALL IRRIGATION FACILITIES WITHIN PROJECT LIMITS (NO SEPARATE PAY).
2. ALL LANDSCAPING AND TREES NOT INDICATED TO BE REMOVED SHALL BE PROTECTED. IF DAMAGED, CONTRACTOR SHALL RESTORE TO EQUAL OR BETTER CONDITION.
3. DUE TO TREE LIMB HEIGHT LIMITATIONS, CONTRACTOR SHALL INSPECT AREA FOR EQUIPMENT CLEARANCE. IN THE EVENT OF A CONFLICT, CONTRACTOR SHALL NOTIFY TOWN PRIOR TO CONSTRUCTION.
4. ALL TREE ROOTS IN CONFLICT WITH PROPOSED WORK SHALL BE STRAIGHT CUT AND TREATED WITH PRUNING PAINT (NO SEPARATE PAY).
5. ALL DAMAGE AND/OR REPLACEMENT TO EXISTING DECORATIVE WALK WAYS NOT SPECIFICALLY NOTED IN THE PLANS SHALL BE SUBSIDIARY TO ANY BID ITEM (NO SEPARATE PAY).
6. REFER TO TRAFFIC CONTROL SHEETS FOR PHASING.
7. THE EXISTENCE AND LOCATIONS OF ALL UNDERGROUND UTILITIES SHOWN ON THE DRAWINGS WERE OBTAINED FROM AVAILABLE RECORDS AND ARE APPROXIMATE. NEITHER THE OWNER NOR THE ENGINEER ASSUMES ANY RESPONSIBILITY FOR UTILITIES NOT SHOWN OR NOT IN THE LOCATION SHOWN. THE CONTRACTOR SHALL DETERMINE THE DEPTH AND LOCATION OF EXISTING UNDERGROUND UTILITIES PRIOR TO EXCAVATION AND SHALL BE REQUIRED TO TAKE ANY PRECAUTIONARY MEASURES TO PROTECT ALL LINES SHOWN AND/ OR ANY OTHER UNDERGROUND UTILITIES NOT OF RECORD OR NOT SHOWN ON THE PLANS. CONTRACTOR SHALL BE RESPONSIBLE FOR CONTACTING ALL FRANCHISE AND TOWN UTILITIES PRIOR TO CONSTRUCTION.

CAUTION!
EXISTING UNDERGROUND UTILITIES IN THE AREA. CONTRACTOR IS RESPONSIBLE FOR DETERMINING THE HORIZONTAL AND VERTICAL LOCATION OF ALL UTILITIES PRIOR TO CONSTRUCTION. CONTRACTOR SHALL BE RESPONSIBLE FOR ANY REPAIRS TO EXISTING UTILITIES DUE TO DAMAGE INCURRED DURING CONSTRUCTION. CONTRACTOR SHALL IMMEDIATELY NOTIFY THE ENGINEER OF ANY DISCREPANCIES ON THE PLANS.

811 Know what's below. Call before you dig.

| No. | REVISIONS | DATE | BY |
|---|---|---|---|
| | | | |

PROJECT NO. 2021-01C/ BID NO. 21-69

Kimley»Horn
2201 WEST ROYAL LANE, SUITE 275, IRVING, TX 75063
PHONE: 214-420-5600
WWW.KIMLEY-HORN.COM
© 2021 KIMLEY-HORN AND ASSOCIATES, INC.
TEXAS REGISTERED ENGINEERING FIRM #F-928

9/10/2021

STATE OF TEXAS
RYAN DELMOTTE
114242
LICENSED PROFESSIONAL ENGINEER

| KHA PROJECT 063543031 | DATE 09/10/2021 | SCALE AS SHOWN | DESIGNED BY RMD | DRAWN BY CDS | CHECKED BY LNA |
|---|---|---|---|---|---|

# TOWN OF ADDISON
## ALPHA ROAD CONN. FROM FARMERS BRANCH CREEK TO ALPHA ROAD

# REMOVAL PLAN
## BELLA LANE EXTENSION

SHEET NUMBER
C1.05

Plotted By: Shadbolt, Cody September 08, 2021 08:57:27am K:\LAC_Civil\063543031_Addison_Alpha_Road_Connector\CADD\PlanSheets\Removal Plan.dwg
This document, together with the concepts and designs presented herein, as an instrument of service, is intended only for the specific purpose and client for which it was prepared. Reuse of and improper reliance on this document without written authorization and adaptation by Kimley-Horn and Associates, Inc. shall be without liability to Kimley-Horn and Associates, Inc.

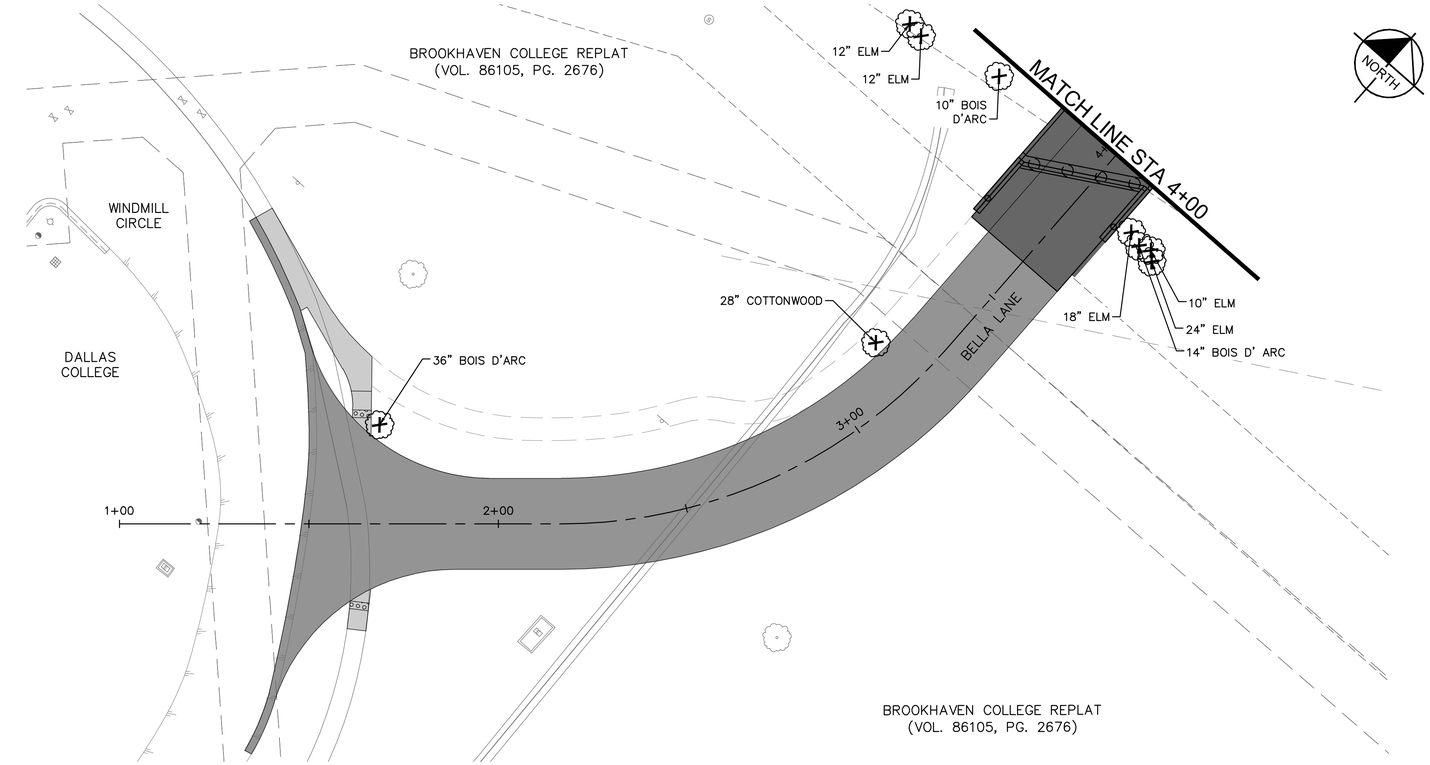


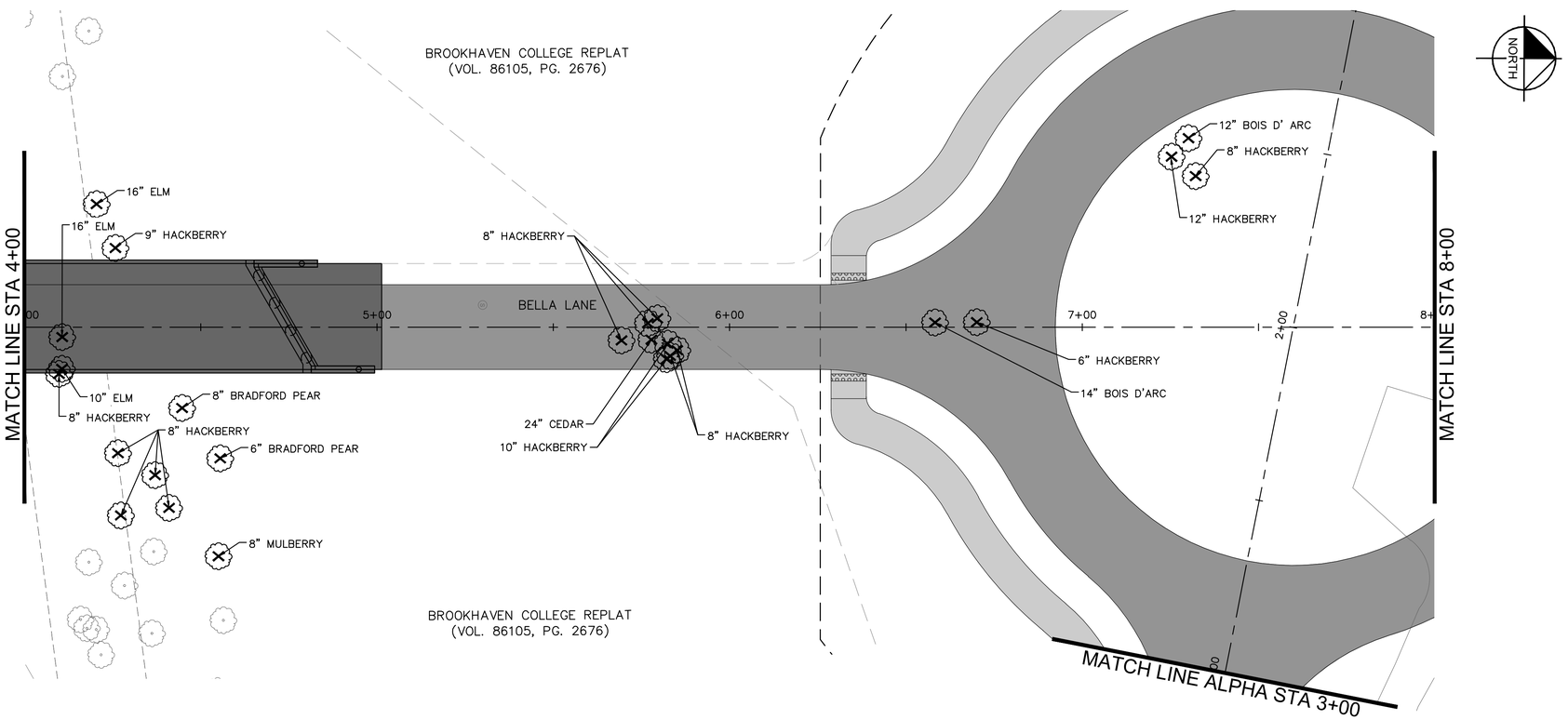


GRAPHIC SCALE IN FEET
0 10 20 40

## NOTES

1. THE EXISTENCE AND LOCATIONS OF ALL TREES SHOWN WERE OBTAINED FROM AVAILABLE DATA AND ARE APPROXIMATE. IT IS THE RESPONSIBILITY OF THE CONTRACTOR VERIFY TREE INFORMATION AND ENSURE THE NECESSARY TREES ARE REMOVED.
2. ALL TREES WITHIN THE LOC TO BE REMOVED UNLESS OTHERWISE NOTED.
3. THE EXISTENCE AND LOCATIONS OF ALL UNDERGROUND UTILITIES SHOWN ON THE DRAWINGS WERE OBTAINED FROM AVAILABLE RECORDS AND ARE APPROXIMATE. NEITHER THE OWNER NOR THE ENGINEER ASSUMES ANY RESPONSIBILITY FOR UTILITIES NOT SHOWN OR NOT IN THE LOCATION SHOWN. THE CONTRACTOR SHALL DETERMINE THE DEPTH AND LOCATION OF EXISTING UNDERGROUND UTILITIES PRIOR TO EXCAVATION AND SHALL BE REQUIRED TO TAKE ANY PRECAUTIONARY MEASURES TO PROTECT ALL LINES SHOWN AND/OR ANY OTHER UNDERGROUND UTILITIES NOT OF RECORD OR NOT SHOWN ON THE PALNS. CONTRACTOR SHALL BE RESPONSIBLE FOR CONTACTING ALL FRANCHISE AND CITY UTILITIES PRIOR TO CONSTRUCTION.

811 Know what's below. Call before you dig.

| No. | REVISIONS | DATE | BY |
|---|---|---|---|


Kimley»Horn
2201 WEST ROYAL LANE, SUITE 275, IRVING, TX 75063
PHONE: 214-420-5600
WWW.KIMLEY-HORN.COM


© 2021 KIMLEY-HORN AND ASSOCIATES, INC.
TEXAS REGISTERED ENGINEERING FIRM #F-928


9/10/2021
STATE OF TEXAS
RYAN DELMOTTE
114242
LICENSED
PROFESSIONAL ENGINEER

KHA PROJECT 063543031
DATE 09/10/2021
SCALE AS SHOWN
DESIGNED BY RMD
DRAWN BY CDS
CHECKED BY LNA

# TOWN OF ADDISON
ALPHA ROAD CONN.
FROM FARMERS BRANCH CREEK TO ALPHA ROAD

# TREE REMOVAL PLAN
SHEET 1 OF 3

SHEET NUMBER
C1.06

PROJECT NO. 2021-01C/ BID NO. 21-69


Plotted By:Shadbolt, Cody September 08, 2021 08:57:54am K:\LAC_Civil\063543031_Addison_Alpha_Road_Connector\CADD\PlanSheets\Tree Plan.dwg
This document, together with the concepts and designs presented herein, as an instrument of service, is intended only for the specific purpose and client for which it was prepared. Reuse of and improper reliance on this document without written authorization and adaptation by Kimley-Horn and Associates, Inc. shall be without liability to Kimley-Horn and Associates, Inc.

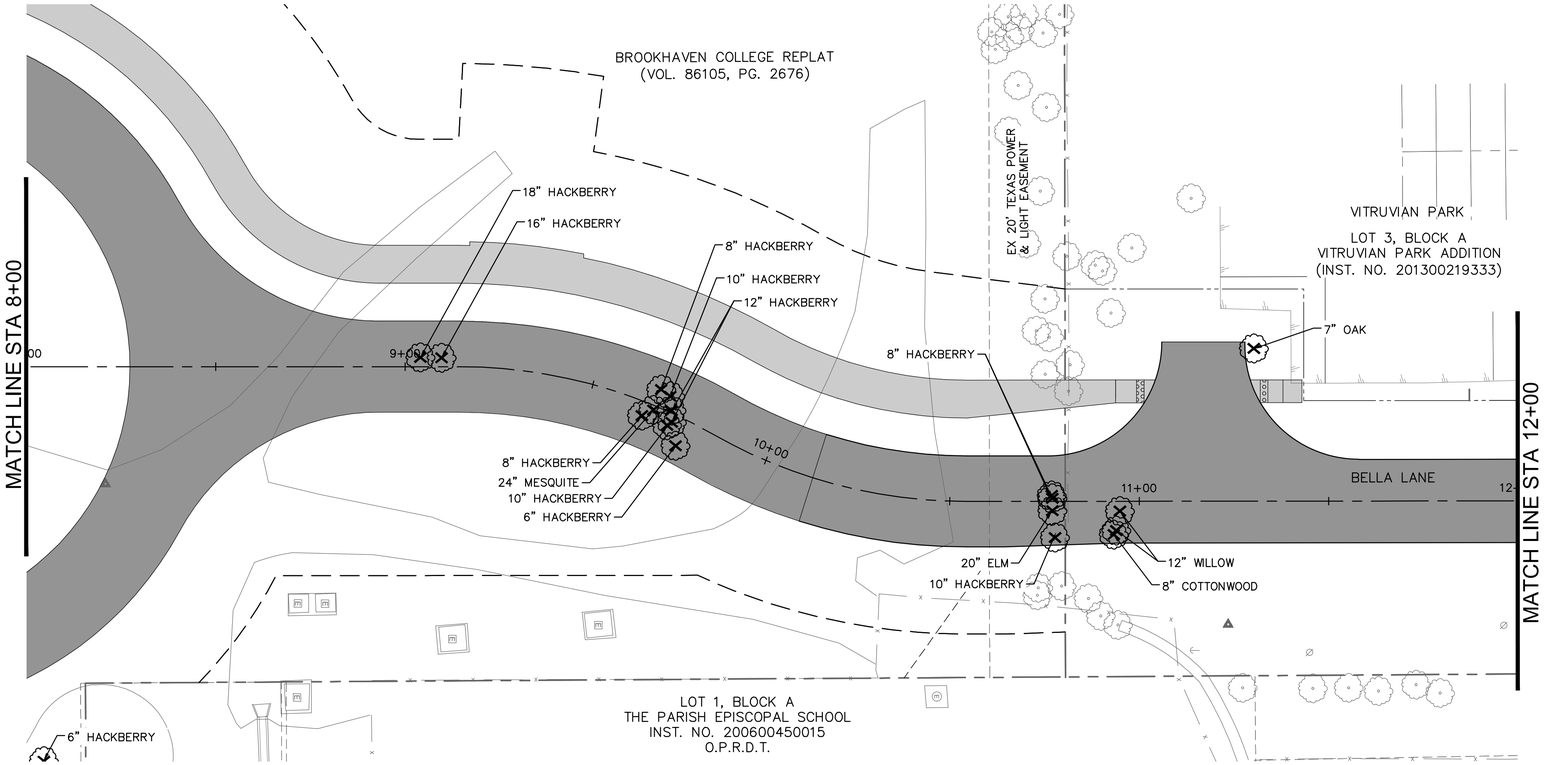


GRAPHIC SCALE IN FEET
0 10 20 40

## NOTES

1. THE EXISTENCE AND LOCATIONS OF ALL TREES SHOWN WERE OBTAINED FROM AVAILABLE DATA AND ARE APPROXIMATE. IT IS THE RESPONSIBILITY OF THE CONTRACTOR VERIFY TREE INFORMATION AND ENSURE THE NECESSARY TREES ARE REMOVED.
2. ALL TREES WITHIN THE LOC TO BE REMOVED UNLESS OTHERWISE NOTED.
3. THE EXISTENCE AND LOCATIONS OF ALL UNDERGROUND UTILITIES SHOWN ON THE DRAWINGS WERE OBTAINED FROM AVAILABLE RECORDS AND ARE APPROXIMATE. NEITHER THE OWNER NOR THE ENGINEER ASSUMES ANY RESPONSIBILITY FOR UTILITIES NOT SHOWN OR NOT IN THE LOCATION SHOWN. THE CONTRACTOR SHALL DETERMINE THE DEPTH AND LOCATION OF EXISTING UNDERGROUND UTILITIES PRIOR TO EXCAVATION AND SHALL BE REQUIRED TO TAKE ANY PRECAUTIONARY MEASURES TO PROTECT ALL LINES SHOWN AND/OR ANY OTHER UNDERGROUND UTILITIES NOT OF RECORD OR NOT SHOWN ON THE PALNS. CONTRACTOR SHALL BE RESPONSIBLE FOR CONTACTING ALL FRANCHISE AND CITY UTILITIES PRIOR TO CONSTRUCTION.

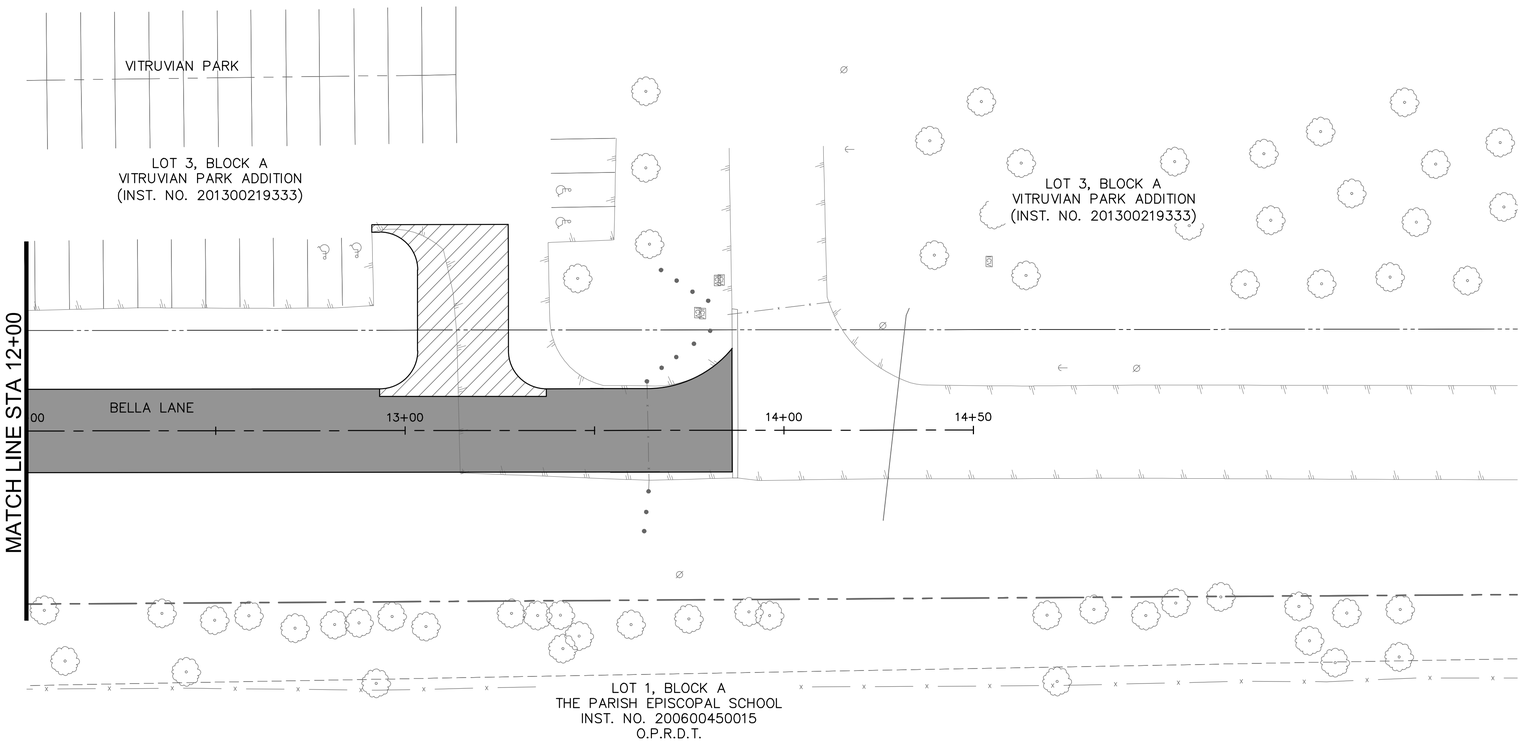


811
Know what's below.
Call before you dig.

| No. | REVISIONS | DATE | BY |
|---|---|---|---|

PROJECT NO. 2021-01C/ BID NO. 21-69


Kimley»Horn
2201 WEST ROYAL LANE, SUITE 275, IRVING, TX 75063
PHONE: 214-420-5600
WWW.KIMLEY-HORN.COM


© 2021 KIMLEY-HORN AND ASSOCIATES, INC.
TEXAS REGISTERED ENGINEERING FIRM #F-928


9/10/2021
STATE OF TEXAS
RYAN DELMOTTE
114242
LICENSED
PROFESSIONAL ENGINEER

KHA PROJECT 063543031
DATE 09/10/2021
SCALE AS SHOWN
DESIGNED BY RMD
DRAWN BY CDS
CHECKED BY LNA

# TOWN OF ADDISON
ALPHA ROAD CONN.
FROM FARMERS BRANCH
CREEK TO ALPHA ROAD

## TREE REMOVAL PLAN
SHEET 2 OF 3

SHEET NUMBER
C1.07


Plotted By:Shadbolt, Cody September 08, 2021 08:57:57am K:\LAC_Civil\063543031_Addison_Alpha_Road_Connector\CADD\PlanSheets\Tree Plan.dwg
This document, together with the concepts and designs presented herein, as an instrument of service, is intended only for the specific purpose and client for which it was prepared. Reuse of and improper reliance on this document without written authorization and adaptation by Kimley-Horn and Associates, Inc. shall be without liability to Kimley-Horn and Associates, Inc.

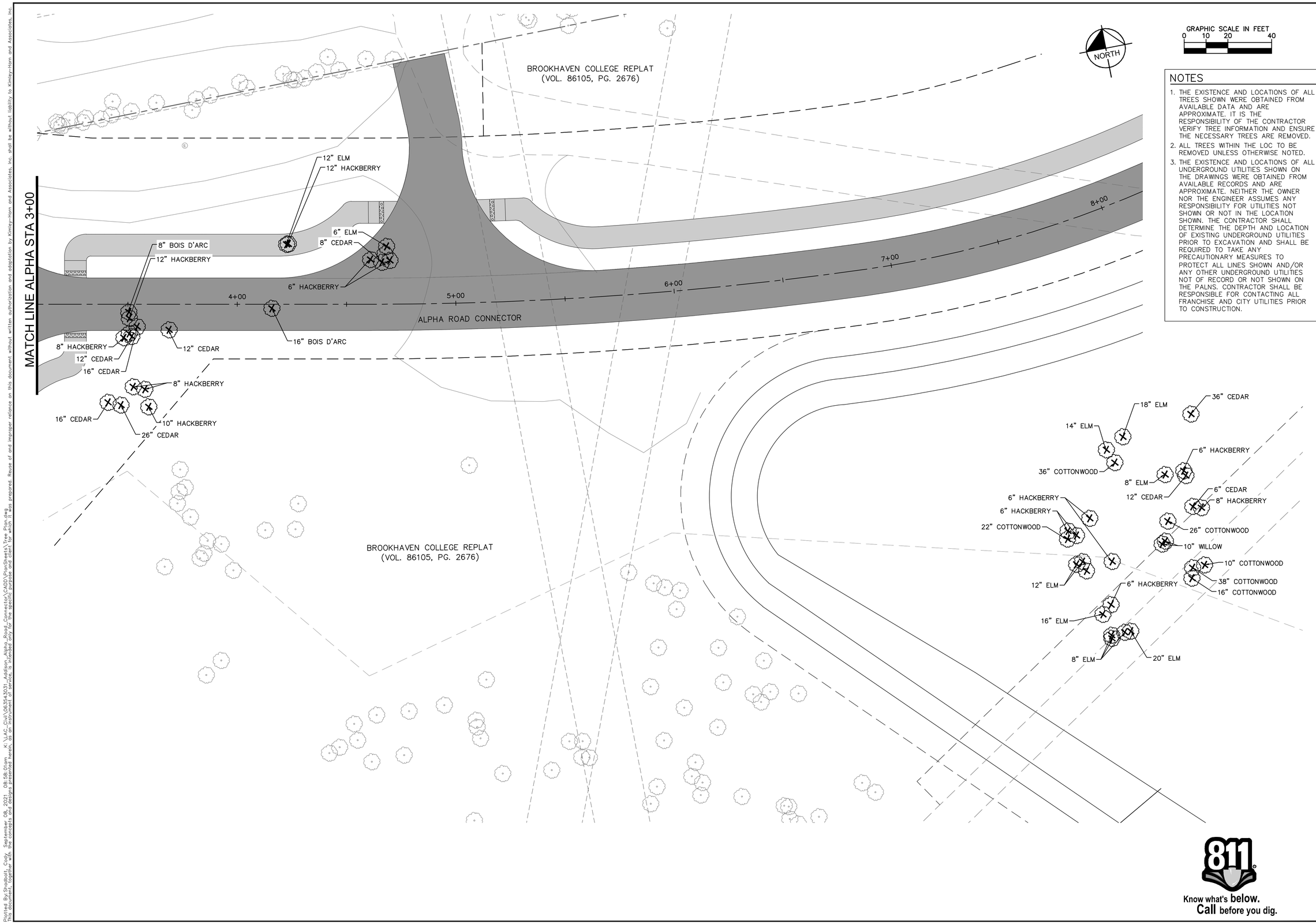


## NOTES

1. THE EXISTENCE AND LOCATIONS OF ALL TREES SHOWN WERE OBTAINED FROM AVAILABLE DATA AND ARE APPROXIMATE. IT IS THE RESPONSIBILITY OF THE CONTRACTOR VERIFY TREE INFORMATION AND ENSURE THE NECESSARY TREES ARE REMOVED.
2. ALL TREES WITHIN THE LOC TO BE REMOVED UNLESS OTHERWISE NOTED.
3. THE EXISTENCE AND LOCATIONS OF ALL UNDERGROUND UTILITIES SHOWN ON THE DRAWINGS WERE OBTAINED FROM AVAILABLE RECORDS AND ARE APPROXIMATE. NEITHER THE OWNER NOR THE ENGINEER ASSUMES ANY RESPONSIBILITY FOR UTILITIES NOT SHOWN OR NOT IN THE LOCATION SHOWN. THE CONTRACTOR SHALL DETERMINE THE DEPTH AND LOCATION OF EXISTING UNDERGROUND UTILITIES PRIOR TO EXCAVATION AND SHALL BE REQUIRED TO TAKE ANY PRECAUTIONARY MEASURES TO PROTECT ALL LINES SHOWN AND/OR ANY OTHER UNDERGROUND UTILITIES NOT OF RECORD OR NOT SHOWN ON THE PALNS. CONTRACTOR SHALL BE RESPONSIBLE FOR CONTACTING ALL FRANCHISE AND CITY UTILITIES PRIOR TO CONSTRUCTION.

811 Know what's below. Call before you dig.

| No. | REVISIONS | DATE | BY |
|---|---|---|---|

PROJECT NO. 2021-01C/ BID NO. 21-69


Kimley»Horn
2201 WEST ROYAL LANE, SUITE 275, IRVING, TX 75063
PHONE: 214-420-5600
WWW.KIMLEY-HORN.COM


© 2021 KIMLEY-HORN AND ASSOCIATES, INC.
TEXAS REGISTERED ENGINEERING FIRM #F-928


9/10/2021
STATE OF TEXAS
RYAN DELMOTTE
114242
LICENSED
PROFESSIONAL ENGINEER

| | |
|---|---|
| KHA PROJECT | 063543031 |
| DATE | 09/10/2021 |
| SCALE | AS SHOWN |
| DESIGNED BY | RMD |
| DRAWN BY | CDS |
| CHECKED BY | LNA |

# TOWN OF ADDISON
ALPHA ROAD CONN.
FROM FARMERS BRANCH
CREEK TO ALPHA ROAD

# TREE REMOVAL PLAN
SHEET 3 OF 3

SHEET NUMBER
C1.08


Plotted By:Shadbolt, Cody September 08, 2021 08:58:01am K:\LAC_Civil\063543031_Addison_Alpha_Road_Connector\CADD\PlanSheets\Tree Plan.dwg
This document, together with the concepts and designs presented herein, as an instrument of service, is intended only for the specific purpose and client for which it was prepared. Reuse of and improper reliance on this document without written authorization and adaptation by Kimley-Horn and Associates, Inc. shall be without liability to Kimley-Horn and Associates, Inc.

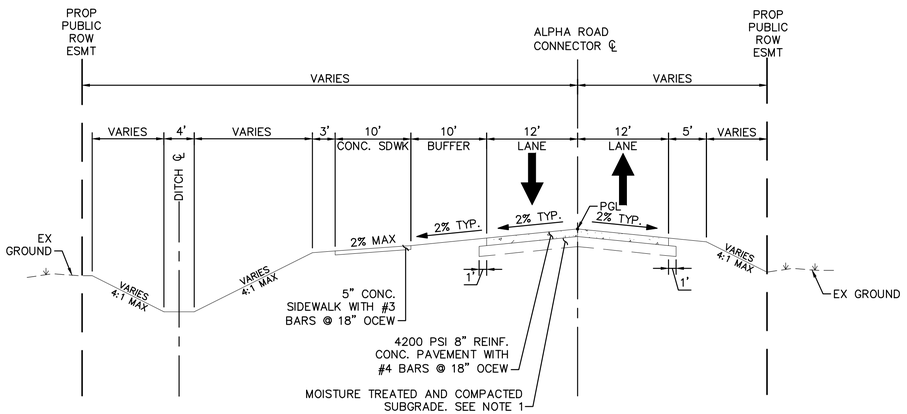


PROPOSED ROADWAY TYPICAL SECTION

## ALPHA ROAD CONNECTOR

1 / C1.09

SCALE: H: 1"=10' V: 1"= 2'

EAST/WEST ALPHA ROAD CONNECTOR STA 3+25 TO END

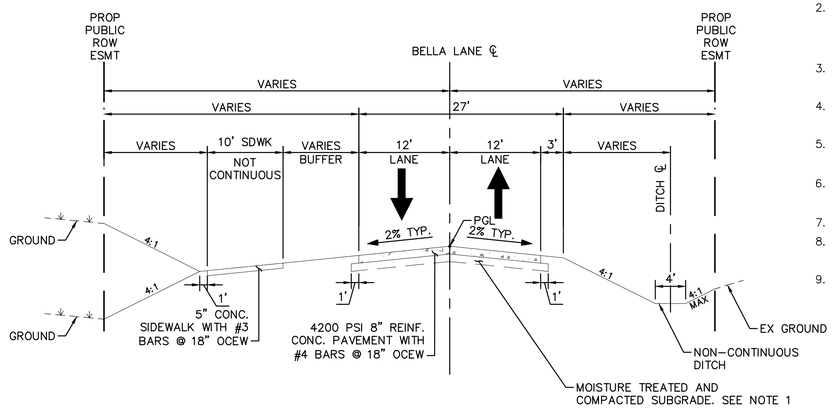


PROPOSED ROADWAY TYPICAL SECTION

## BELLA LANE DITCH SECTION

2 / C1.09

SCALE: H: 1"=10' V: 1"= 2'

BELLA LANE BEGIN TO STA 3+62, STA 5+01 TO STA 6+50 AND STA 9+00 TO STA 10+13
DITCH LIMITS FROM STA 2+25 TO 3+00

NOTES:

1. MOISTURE CONDITION AND COMPACT TO A MINIMUM OF 94% OF ASTM D 698 (STANDARD PROCTOR DENSITY) AT 2% TO 6% ABOVE THE OPTIMUM MOISTURE CONTENT. EXTEND AT LEAST 1' OUTSIDE THE EDGE OF PROPOSED PAVEMENT. IN-SITU MATERIAL SHALL BE PROOF-ROLLED PER SECTION 4.2.3. (REFER TO GEOTECH REPORT PREPARED BY KLEINFELDER, INC. (REPORT 20212439.001A) DATED DECEMBER 2, 2020.)
2. 6" LIME-STABILIZED SUBGRADE (42 LBS/SY) COMPACTED TO A MINIMUM OF 95% ASTM D 698 (STANDARD PROCTOR DENSITY) AT 2% TO 5% ABOVE THE OPTIMUM MOISTURE CONTENT.
3. ALL PAVEMENT DIMENSIONS SHOWN ON THE PLANS ARE TO EDGE OF PAVEMENT UNLESS OTHERWISE NOTED.
4. TYPICAL SECTIONS ARE APPROXIMATE. REFER TO PLAN SHEETS FOR STATIONING AND LIMITS.
5. DIMENSIONS GIVEN FOR PARKWAY WIDTHS ARE TYPICAL, BUT MAY VARY IN LOCATIONS. REFER TO PLAN SHEETS FOR PARKWAY WIDTHS.
6. ALL DISTURBED AREAS TO RECEIVE HYDRAULIC MULCHING WITH 4" TOPSOIL. REFER TO EROSION CONTROL SHEETS.
7. REFER TO TOWN SPECIFICATIONS FOR ADDITIONAL REQUIREMENTS.
8. REFER TO GEOTECH REPORT NUMBER 20212439.001A PREPARED BY: KLEINFELDER, INC. DATED: 07-15-2021.
9. ALL WORK WITHIN FARMERS BRANCH SHALL BE COMPLETED IN ACCORDANCE WITH FARMERS BRANCH SPECIFICATIONS.

LISTING OF ABBREVIATIONS:

ROW = RIGHT-OF-WAY
℄ = CENTER LINE
PGL = PROFILE GRADE LINE

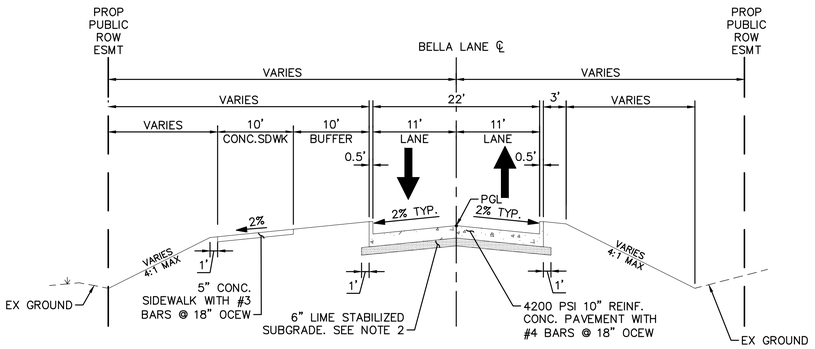


PROPOSED ROADWAY TYPICAL SECTION

## BELLA LANE CURB AND GUTTER SECTION

3 / C1.09

SCALE: H: 1"=10' V: 1"= 2'

BELLA LANE STA 10+13 TO STA 10+76

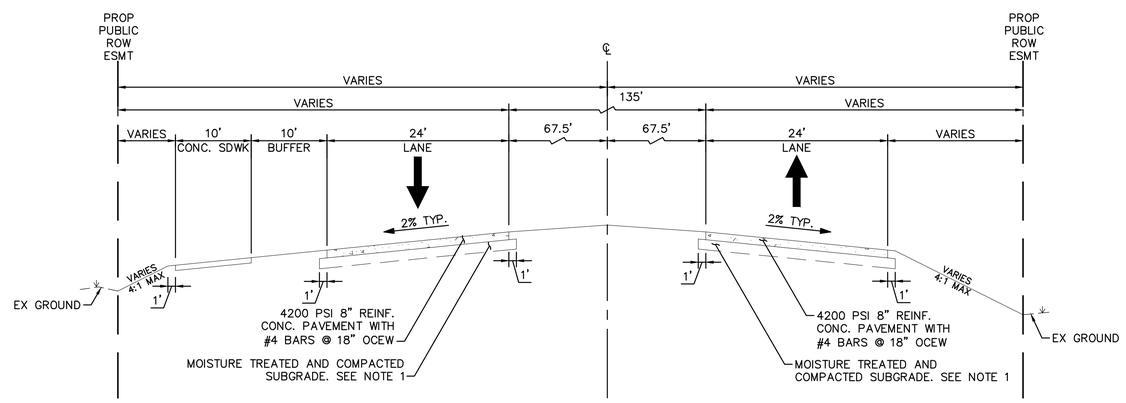


PROPOSED ROADWAY TYPICAL SECTION

## TRAFFIC CIRCLE

4 / C1.09

SCALE: H: 1"=10' V: 1"= 2'

TRAFFIC CIRCLE

811 Know what's **below.** **Call** before you dig.

| No. | REVISIONS | DATE | BY |
|---|---|---|---|
| | | | |

PROJECT NO. 2021-01C/ BID NO. 21-69

Kimley»Horn
2201 WEST ROYAL LANE, SUITE 275, IRVING, TX 75063
PHONE: 214-420-5600
WWW.KIMLEY-HORN.COM
© 2021 KIMLEY-HORN AND ASSOCIATES, INC.
TEXAS REGISTERED ENGINEERING FIRM #F-928

9/10/2021

STATE OF TEXAS
RYAN DELMOTTE
114242
LICENSED
PROFESSIONAL ENGINEER

KHA PROJECT 063543031
DATE 09/10/2021
SCALE AS SHOWN
DESIGNED BY RMD
DRAWN BY CDS
CHECKED BY LNA

**TOWN OF ADDISON**
ALPHA ROAD CONN.
FROM FARMERS BRANCH CREEK TO ALPHA ROAD

TYPICAL SECTIONS
SHEET 1 OF 2

SHEET NUMBER
C1.09

Plotted By: Ghotkar, Ovais, September 09, 2021 - 01:18:37pm K:\ADC_Civil\063543031_Addison Alpha Road Connection\2-ADD\Plan Sheets\Typical Sections.dwg
This document, together with the concepts and designs presented herein, as an instrument of service, is intended only for the specific purpose and client for which it was prepared. Reuse of and improper reliance on this document without written authorization and adaptation by Kimley-Horn and Associates, Inc. shall be without liability to Kimley-Horn and Associates, Inc.

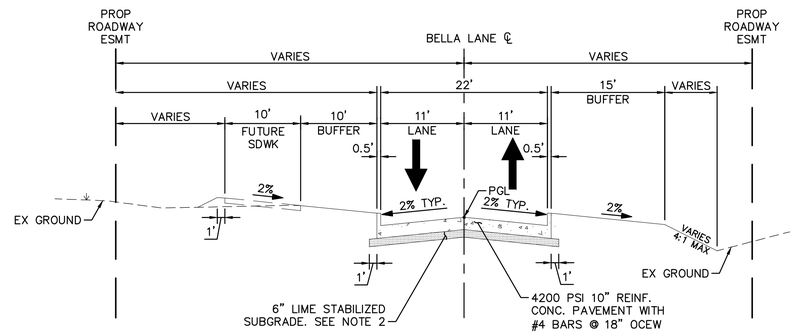


PROPOSED ROADWAY TYPICAL SECTION

## BELLA LANE CURB AND GUTTER SECTION

5 / C1.10

SCALE: H: 1"=10' V: 1"= 2'

BELLA LANE STA 11+58 TO END

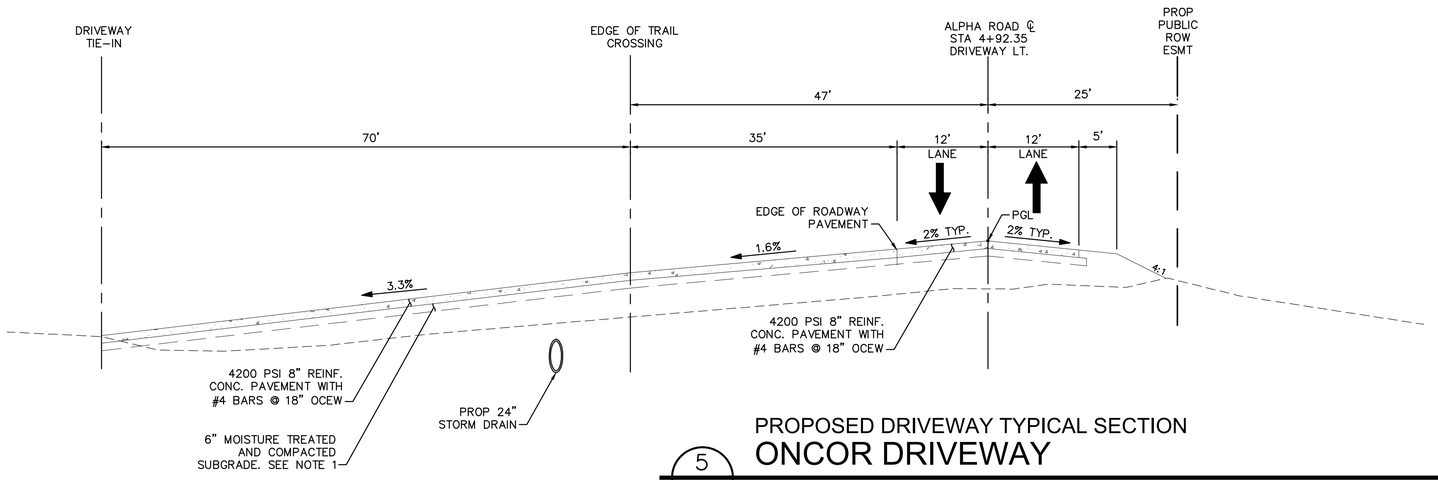


PROPOSED DRIVEWAY TYPICAL SECTION

## ONCOR DRIVEWAY

5 / C1.10

SCALE: H: 1"=10' V: 1"= 2'

ALPHA ROAD CONNECTOR STA 4+92 DRIVEWAY LT.

NOTES:

1. MOISTURE CONDITION AND COMPACT TO A MINIMUM OF 94% OF ASTM D 698 (STANDARD PROCTOR DENSITY) AT 2% TO 6% ABOVE THE OPTIMUM MOISTURE CONTENT. EXTEND AT LEAST 1' OUTSIDE THE EDGE OF PROPOSED PAVEMENT. IN-SITU MATERIAL SHALL BE PROOF-ROLLED PER SECTION 4.2.3. (REFER TO GEOTECH REPORT PREPARED BY KLEINFELDER, INC. (REPORT 20212439.001A) DATED DECEMBER 2, 2020.)
2. 6" LIME-STABILIZED SUBGRADE (42 LBS/SY) COMPACTED TO A MINIMUM OF 95% ASTM D 698 (STANDARD PROCTOR DENSITY) AT 2% TO 5% ABOVE THE OPTIMUM MOISTURE CONTENT.
3. ALL PAVEMENT DIMENSIONS SHOWN ON THE PLANS ARE TO EDGE OF PAVEMENT UNLESS OTHERWISE NOTED.
4. TYPICAL SECTIONS ARE APPROXIMATE. REFER TO PLAN SHEETS FOR STATIONING AND LIMITS.
5. DIMENSIONS GIVEN FOR PARKWAY WIDTHS ARE TYPICAL, BUT MAY VARY IN LOCATIONS. REFER TO PLAN SHEETS FOR PARKWAY WIDTHS.
6. ALL DISTURBED AREAS TO RECEIVE HYDRAULIC MULCHING WITH 4" TOPSOIL. REFER TO EROSION CONTROL SHEETS.
7. REFER TO TOWN SPECIFICATIONS FOR ADDITIONAL REQUIREMENTS.
8. REFER TO GEOTECH REPORT NUMBER 20212439.001A PREPARED BY: KLEINFELDER, INC. DATED: 07-15-2021.
9. ALL WORK WITHIN FARMERS BRANCH SHALL BE COMPLETED IN ACCORDANCE WITH FARMERS BRANCH SPECIFICATIONS.

LISTING OF ABBREVIATIONS:

ROW = RIGHT-OF-WAY
℄ = CENTER LINE
PGL = PROFILE GRADE LINE

811 Know what's below. Call before you dig.

| No. | REVISIONS | DATE | BY |
|---|---|---|---|

PROJECT NO. 2021-01C/ BID NO. 21-69

Kimley»Horn
2201 WEST ROYAL LANE, SUITE 275, IRVING, TX 75063
PHONE: 214-420-5600
WWW.KIMLEY-HORN.COM
© 2021 KIMLEY-HORN AND ASSOCIATES, INC.
TEXAS REGISTERED ENGINEERING FIRM #F-928

9/10/2021

STATE OF TEXAS
RYAN DELMOTTE
114242
LICENSED
PROFESSIONAL ENGINEER

KHA PROJECT 063543031
DATE 09/10/2021
SCALE AS SHOWN
DESIGNED BY RMD
DRAWN BY CDS
CHECKED BY LNA

# TOWN OF ADDISON
ALPHA ROAD CONN.
FROM FARMERS BRANCH CREEK TO ALPHA ROAD

TYPICAL SECTIONS
SHEET 2 OF 2

SHEET NUMBER
C1.10

Plotted By:Shadbolt, Cody September 09, 2021 01:18:32pm K:\LAC_Civil\063543031_Addison_Alpha_Road_Connector\CADD\PlanSheets\Typical Sections.dwg
This document, together with the concepts and designs presented herein, as an instrument of service, is intended only for the specific purpose and client for which it was prepared. Reuse of and improper reliance on this document without written authorization and adaptation by Kimley-Horn and Associates, Inc. shall be without liability to Kimley-Horn and Associates, Inc.

## PHASE 1

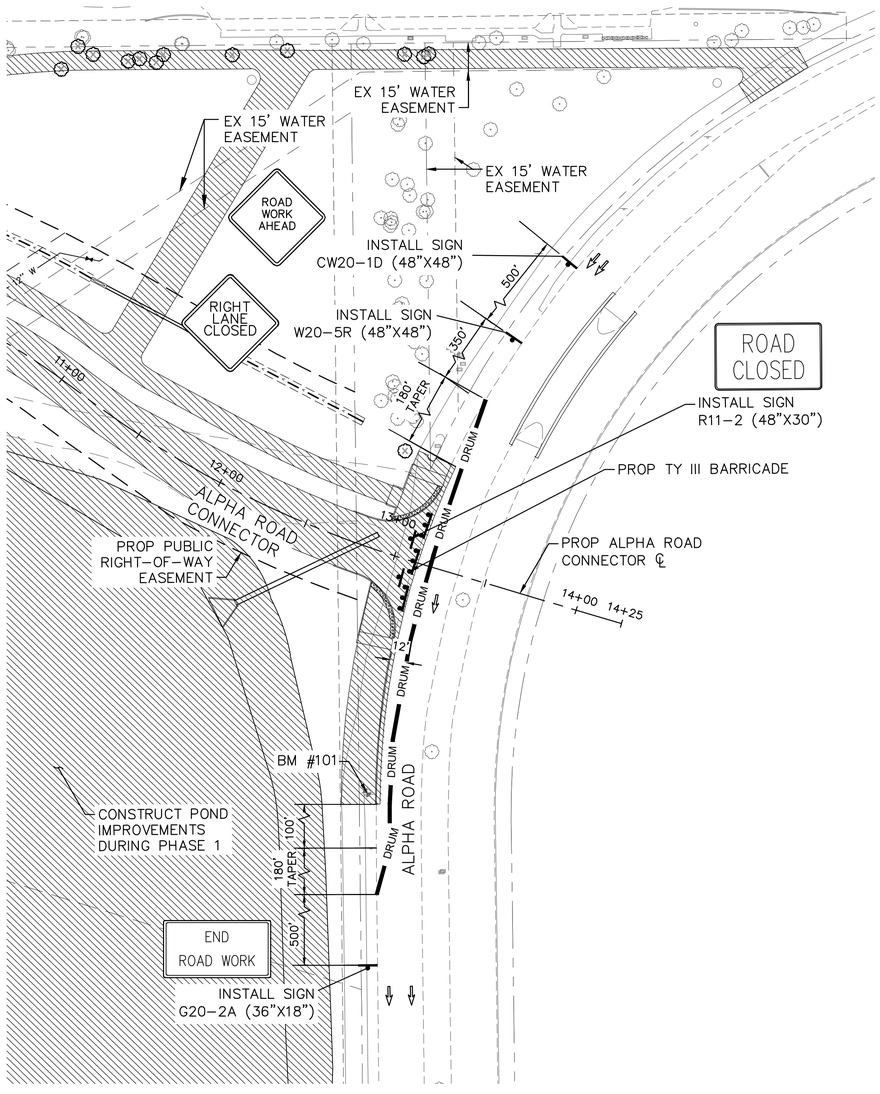


## PHASE 2

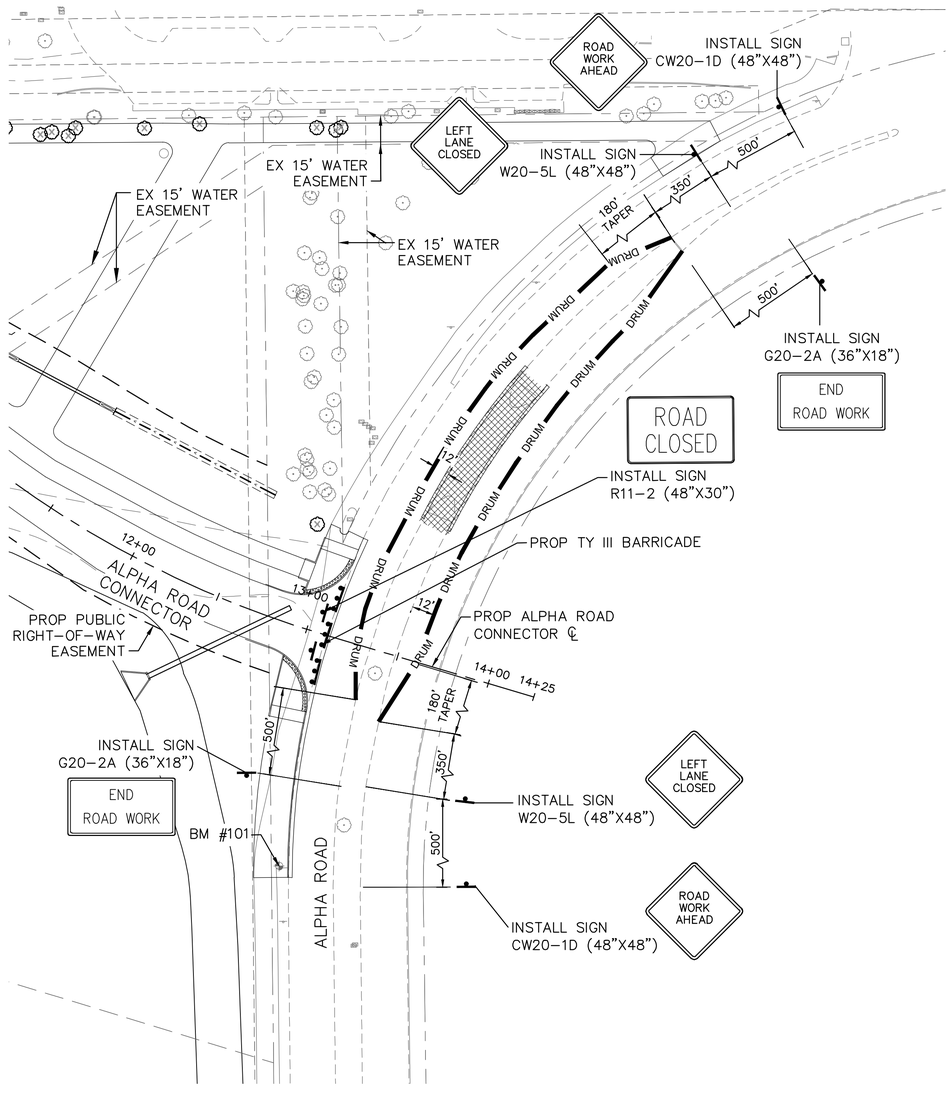


NORTH

GRAPHIC SCALE IN FEET
0 20 40 80

### LEGEND

PHASE 1

PHASE 2

### NOTES

**Phase 1 Alpha Road Connector**

1. Implement approved traffic control plan and install erosion and sedimentation best management practices.
2. Perform storm drainage, subgrade and paving improvements for remainder of work area.
3. Staging for bridge construction and all construction materials shall remain within the proposed easements at all times.
4. Install temporary stabilization for completed areas of work.
5. Obtain approval for initiation of next sequential phase of work.
6. Remove temporary traffic control measures.
7. Open Phase 1 to traffic.

**Phase 2 Alpha Road - Inside Lane/Medians**

1. Implement approved traffic control plan and install erosion and sedimentation best management practices.
2. Perform subgrade and paving improvements.
3. Obtain approval for initiation of next sequential phase of work.
4. Remove temporary traffic control measures.

811 Know what's below. Call before you dig.

| No. | REVISIONS | DATE | BY |
|---|---|---|---|

PROJECT NO. 2021-01C/ BID NO. 21-69


Kimley»Horn
2201 WEST ROYAL LANE, SUITE 275, IRVING, TX 75063
PHONE: 214-420-5600
WWW.KIMLEY-HORN.COM


© 2021 KIMLEY-HORN AND ASSOCIATES, INC.
TEXAS REGISTERED ENGINEERING FIRM #F-928


9/10/2021

STATE OF TEXAS
RYAN DELMOTTE
114242
LICENSED
PROFESSIONAL ENGINEER

KHA PROJECT 063543031
DATE 09/10/2021
SCALE AS SHOWN
DESIGNED BY RMD
DRAWN BY CDS
CHECKED BY LNA

# TOWN OF ADDISON
ALPHA ROAD CONN.
FROM FARMERS BRANCH CREEK TO ALPHA ROAD

# TRAFFIC CONTROL PLANS
ALPHA ROAD CONNECTOR

SHEET NUMBER
C2.01


Plotted By:Shadbolt, Cody September 08, 2021 08:59:18am K:\LAC_Civil\063543031_Addison_Alpha_Road_Connector\CADD\PlanSheets\Traffic Control.dwg
This document, together with the concepts and designs presented herein, as an instrument of service, is intended only for the specific purpose and client for which it was prepared. Reuse of and improper reliance on this document without written authorization and adaptation by Kimley-Horn and Associates, Inc. shall be without liability to Kimley-Horn and Associates, Inc.

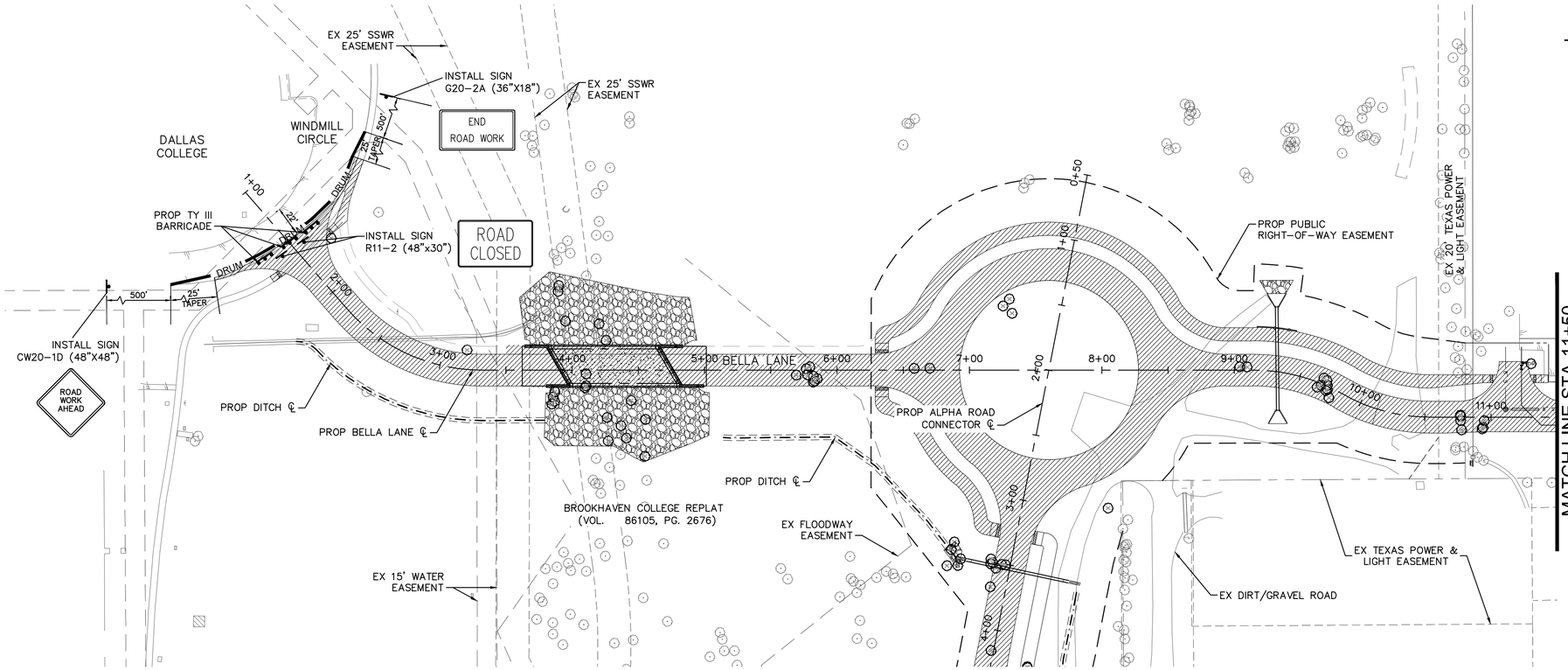


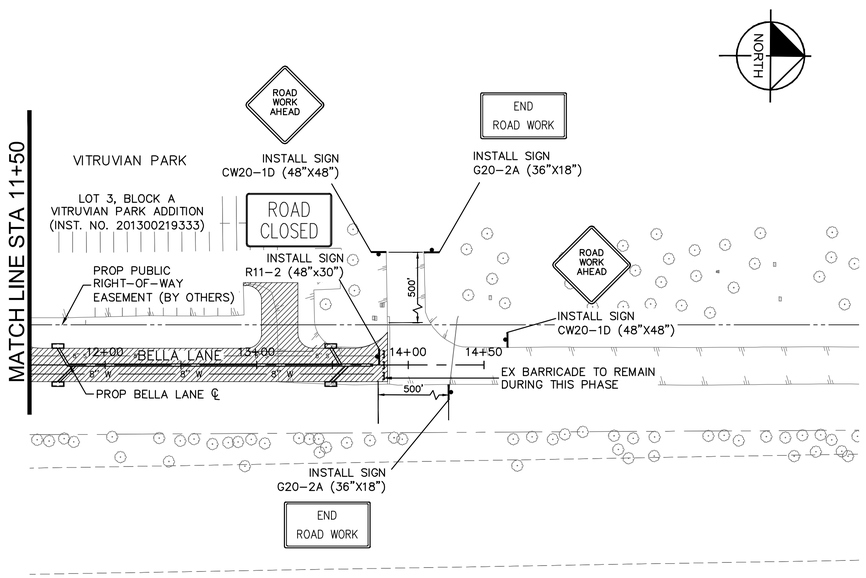


## LEGEND

PHASE 1

PHASE 2

## NOTES

**Phase 1 Alpha Road Connector**

1. Implement approved traffic control plan and install erosion and sedimentation best management practices.
2. Perform storm drainage, subgrade and paving improvements for remainder of work area.
3. Staging for bridge construction and all construction materials shall remain within the proposed easements at all times.
4. Install temporary stabilization for completed areas of work.
5. Obtain approval for initiation of next sequential phase of work.
6. Remove temporary traffic control measures.
7. Open Phase 1 to traffic.

**Phase 2 Alpha Road - Inside Lane/Medians**

1. Implement approved traffic control plan and install erosion and sedimentation best management practices.
2. Perform subgrade and paving improvements.
3. Obtain approval for initiation of next sequential phase of work.
4. Remove temporary traffic control measures.

811 Know what's below. Call before you dig.

| No. | REVISIONS | DATE | BY |
|---|---|---|---|

PROJECT NO. 2021-01C/ BID NO. 21-69


Kimley»Horn
2201 WEST ROYAL LANE, SUITE 275, IRVING, TX 75063
PHONE: 214-420-5600
WWW.KIMLEY-HORN.COM


© 2021 KIMLEY-HORN AND ASSOCIATES, INC.
TEXAS REGISTERED ENGINEERING FIRM #F-928


9/10/2021

STATE OF TEXAS
RYAN DELMOTTE
114242
LICENSED
PROFESSIONAL ENGINEER

KHA PROJECT 063543031
DATE 09/10/2021
SCALE AS SHOWN
DESIGNED BY RMD
DRAWN BY CDS
CHECKED BY LNA

# TOWN OF ADDISON
ALPHA ROAD CONN.
FROM FARMERS BRANCH CREEK TO ALPHA ROAD

# TRAFFIC CONTROL PLANS
BELLA LANE EXTENSION

SHEET NUMBER
C2.02


Plotted By:Shadbolt, Cody September 08, 2021 08:59:22am K:\LAC_Civil\063543031_Addison_Alpha_Road_Connector\CADD\Plan Sheets\Traffic Control.dwg
This document, together with the concepts and designs presented herein, as an instrument of service, is intended only for the specific purpose and client for which it was prepared. Reuse of and improper reliance on this document without written authorization and adaptation by Kimley-Horn and Associates, Inc. shall be without liability to Kimley-Horn and Associates, Inc.

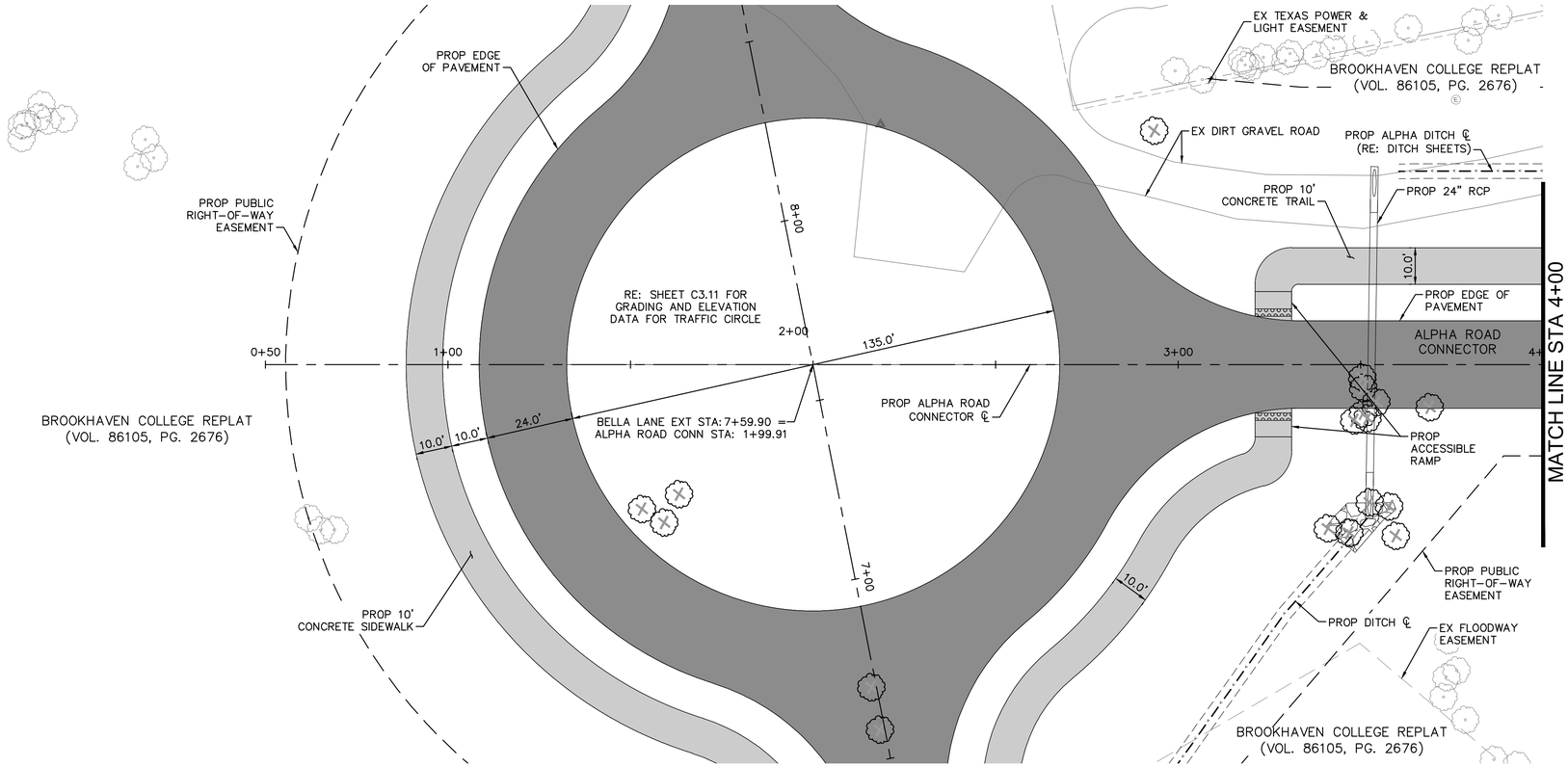


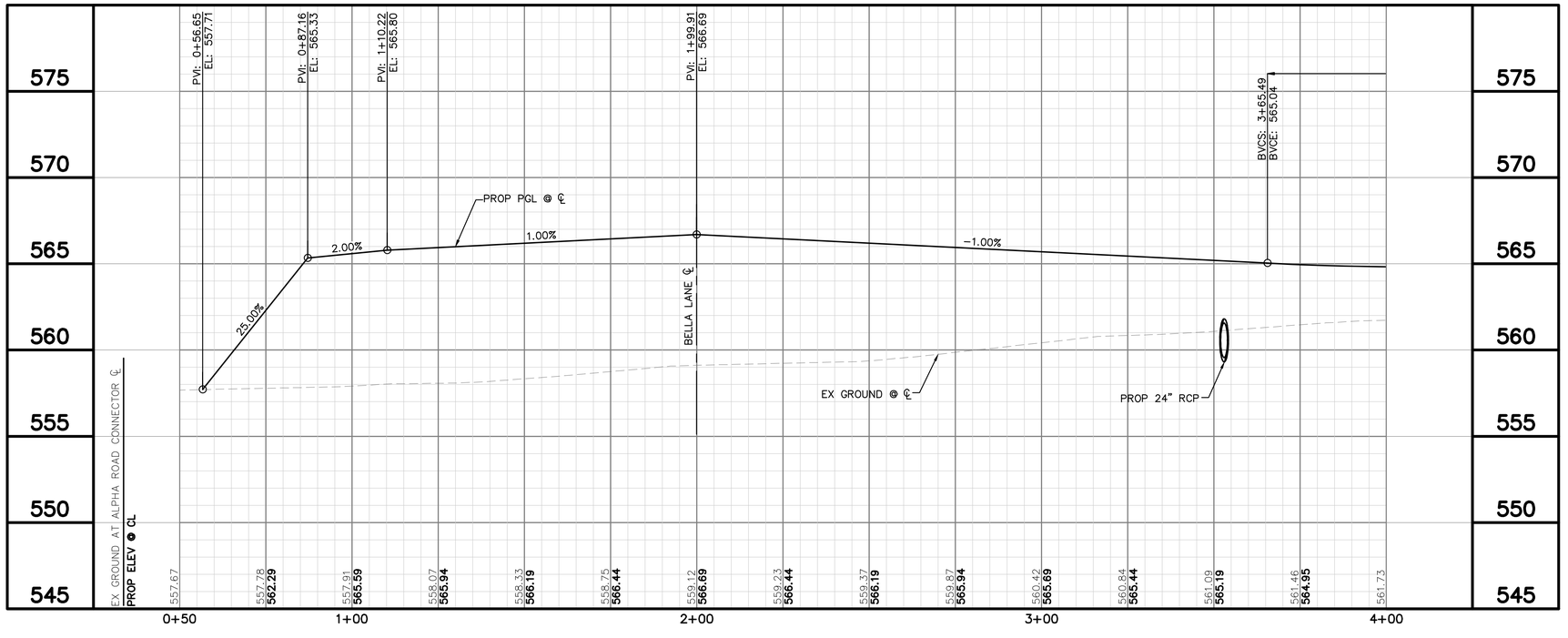


GRAPHIC SCALE IN FEET
0 10 20 40

NORTH

## LEGEND

- EX ROW
- EX EASEMENT
- PROP EASEMENT
- PROP STORM DRAIN
- PROP DITCH ℄
- PROP PAVEMENT
- PROP SIDEWALK
- PROP ASPHALT
- EX TREE
- EX TREE TO BE REMOVED

## NOTES

1. CONTRACTOR IS RESPONSIBLE FOR RELOCATION OF ANY SIGNS AND COORDINATION WITH THE CITY ON ANY NECESSARY MODIFICATIONS.
2. CONTRACTOR IS RESPONSIBLE FOR LOCATING ALL IRRIGATION FACILITIES WITHIN LOC.
3. THE EXISTENCE AND LOCATIONS OF ALL UNDERGROUND UTILITIES SHOWN ON THE DRAWINGS WERE OBTAINED FROM AVAILABLE RECORDS AND ARE APPROXIMATE. NEITHER THE OWNER NOR THE ENGINEER ASSUMES ANY RESPONSIBILITY FOR UTILITIES NOT SHOWN OR NOT IN THE LOCATION SHOWN. THE CONTRACTOR SHALL DETERMINE THE DEPTH AND LOCATION OF EXISTING UNDERGROUND UTILITIES PRIOR TO EXCAVATION AND SHALL BE REQUIRED TO TAKE ANY PRECAUTIONARY MEASURES TO PROTECT ALL LINES SHOWN AND/ OR ANY OTHER UNDERGROUND UTILITIES NOT OF RECORD OR NOT SHOWN ON THE PLANS. CONTRACTOR SHALL BE RESPONSIBLE FOR CONTACTING ALL FRANCHISE AND CITY UTILITIES PRIOR TO CONSTRUCTION.
4. ELEV ARE TOP OF PAVEMENT UNLESS OTHERWISE NOTED.

| | |
|---|---|
| EX | EXISTING |
| PROP | PROPOSED |
| STA | STATION |
| EL | ELEVATION |
| PI | POINT OF HORIZONTAL INFLECTION |
| PC | POINT OF HORIZONTAL CURVATURE |
| PT | POINT OF HORIZONTAL TANGENCY |
| PRC | POINT OF HORIZONTAL REVERSE CURVATURE |
| PVI | POINT OF VERTICAL INFLECTION |
| AD | ALGEBRAIC DIFFERENCE IN GRADES |
| VC | VERTICAL CURVE |
| BVCS/ EVCS | BEGIN/END VERTICAL CURVE STATION |
| BVCE/ EVCE | BEGIN/END VERTICAL CURVE ELEVATION |
| PGL | PROPOSED GRADE LINE |
| TCE | TEMPORARY CONSTRUCTION EASEMENT |
| TP | TOP OF PAVEMENT |

Know what's **below.**
**Call** before you dig.

| No. | REVISIONS | DATE | BY |
|---|---|---|---|
| | | | |

PROJECT NO. 2021-01C/ BID NO. 21-69

Kimley»Horn
2201 WEST ROYAL LANE, SUITE 275, IRVING, TX 75063
PHONE: 214-420-5600
WWW.KIMLEY-HORN.COM
© 2021 KIMLEY-HORN AND ASSOCIATES, INC.
TEXAS REGISTERED ENGINEERING FIRM #F-928

9/10/2021
STATE OF TEXAS
RYAN DELMOTTE
114242
LICENSED PROFESSIONAL ENGINEER

| KHA PROJECT 063543031 | | |
|---|---|---|
| | DATE | 09/10/2021 |
| | SCALE | AS SHOWN |
| | DESIGNED BY | RMD |
| | DRAWN BY | CDS |
| | CHECKED BY | LNA |

**TOWN OF ADDISON**
ALPHA ROAD CONN.
FROM FARMERS BRANCH CREEK TO ALPHA ROAD

# ALPHA ROAD CONNECTOR PLAN AND PROFILE
BEGIN TO STA 4+00

SHEET NUMBER
C3.01

Plotted By: Shettigh, Cody Sep 10, 2021 01:26:09pm K:\IRV_Civil\063543031 Addison Alpha Royal Connector\CADD\PrintSheets\Prints Plots\Prints\Alpha Road Connector Plan and Profile.dwg
This document, together with the concepts and designs presented herein, as an instrument of service is intended only for the specific purpose and client for which it was prepared. Reuse of and improper reliance on this document without written authorization and adaptation by Kimley-Horn and Associates, Inc. shall be without liability to Kimley-Horn and Associates, Inc.

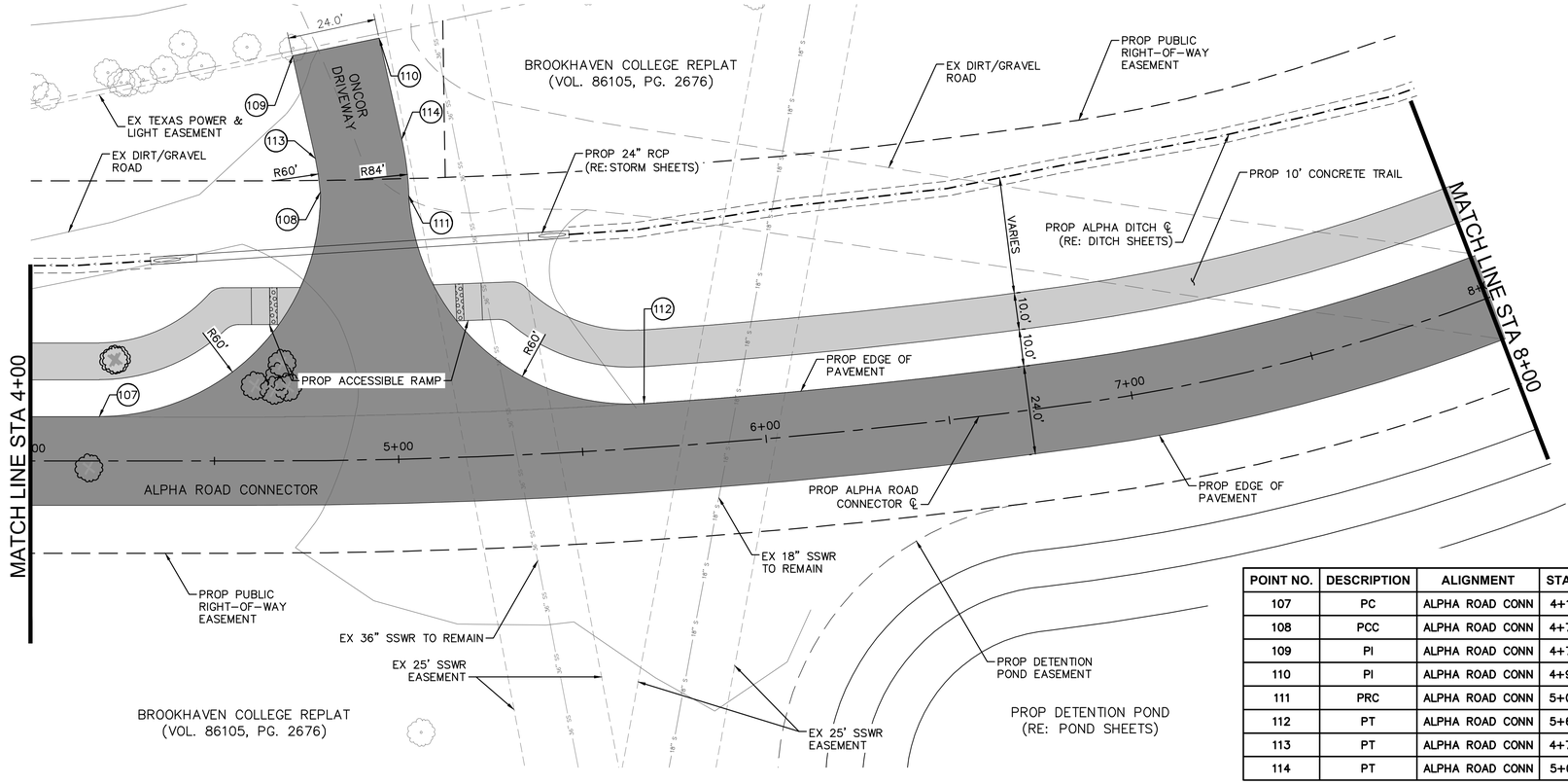


| POINT NO. | DESCRIPTION | ALIGNMENT | STATION | OFFSET | ELEV |
|---|---|---|---|---|---|
| 107 | PC | ALPHA ROAD CONN | 4+18.68 | 12.00' L | 564.59' |
| 108 | PCC | ALPHA ROAD CONN | 4+79.57 | 72.80' L | 563.88' |
| 109 | PI | ALPHA ROAD CONN | 4+72.09 | 109.88' L | 562.51' |
| 110 | PI | ALPHA ROAD CONN | 4+97.34 | 114.28' L | 562.51' |
| 111 | PRC | ALPHA ROAD CONN | 5+04.73 | 71.34' L | 564.26' |
| 112 | PT | ALPHA ROAD CONN | 5+67.49 | 12.00' L | 567.27' |
| 113 | PT | ALPHA ROAD CONN | 4+78.32 | 82.00' L | 563.55' |
| 114 | PT | ALPHA ROAD CONN | 5+03.13 | 86.74' L | 563.66' |

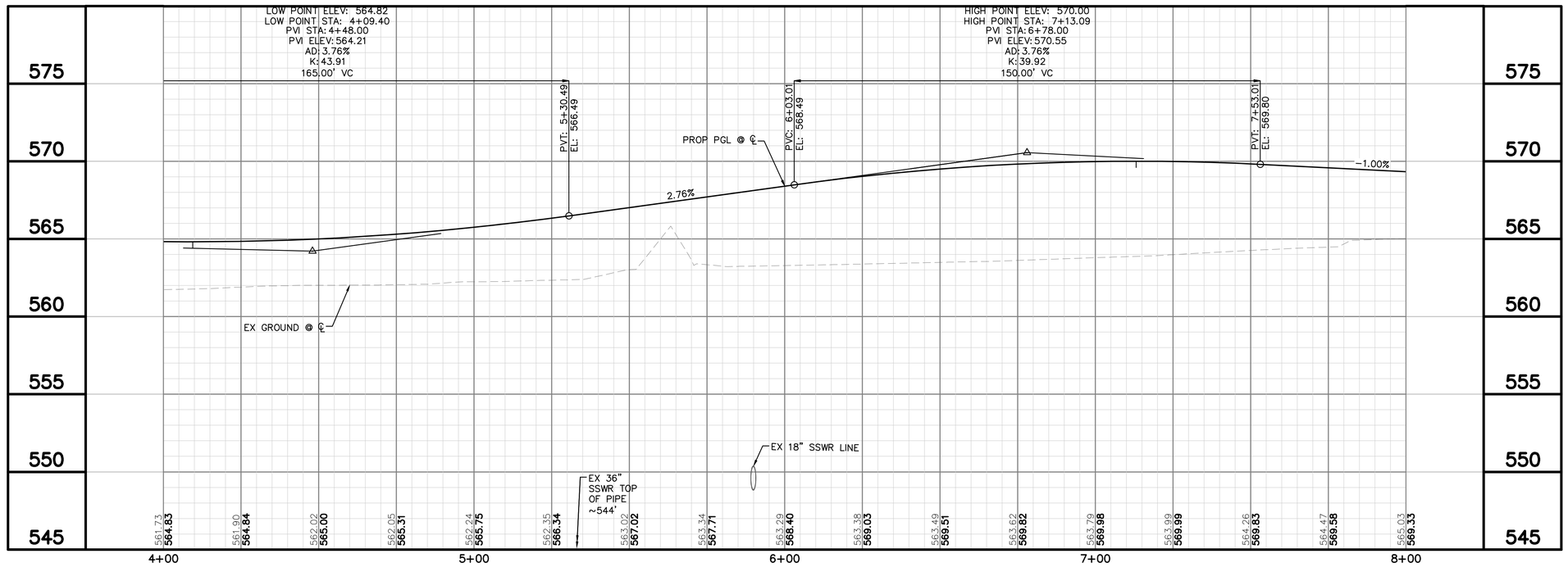





GRAPHIC SCALE IN FEET
0 10 20 40

## LEGEND

- EX ROW
- EX EASEMENT
- PROP EASEMENT
- PROP STORM DRAIN
- PROP DITCH ℄
- PROP PAVEMENT
- PROP SIDEWALK
- PROP ASPHALT
- EX TREE
- EX TREE TO BE REMOVED

## NOTES

1. CONTRACTOR IS RESPONSIBLE FOR RELOCATION OF ANY SIGNS AND COORDINATION WITH THE CITY ON ANY NECESSARY MODIFICATIONS.
2. CONTRACTOR IS RESPONSIBLE FOR LOCATING ALL IRRIGATION FACILITIES WITHIN LOC.
3. THE EXISTENCE AND LOCATIONS OF ALL UNDERGROUND UTILITIES SHOWN ON THE DRAWINGS WERE OBTAINED FROM AVAILABLE RECORDS AND ARE APPROXIMATE. NEITHER THE OWNER NOR THE ENGINEER ASSUMES ANY RESPONSIBILITY FOR UTILITIES NOT SHOWN OR NOT IN THE LOCATION SHOWN. THE CONTRACTOR SHALL DETERMINE THE DEPTH AND LOCATION OF EXISTING UNDERGROUND UTILITIES PRIOR TO EXCAVATION AND SHALL BE REQUIRED TO TAKE ANY PRECAUTIONARY MEASURES TO PROTECT ALL LINES SHOWN AND/ OR ANY OTHER UNDERGROUND UTILITIES NOT OF RECORD OR NOT SHOWN ON THE PLANS. CONTRACTOR SHALL BE RESPONSIBLE FOR CONTACTING ALL FRANCHISE AND CITY UTILITIES PRIOR TO CONSTRUCTION.
4. ELEV ARE TOP OF PAVEMENT UNLESS OTHERWISE NOTED.

| | |
|---|---|
| EX | EXISTING |
| PROP | PROPOSED |
| STA | STATION |
| EL | ELEVATION |
| PI | POINT OF HORIZONTAL INFLECTION |
| PC | POINT OF HORIZONTAL CURVATURE |
| PT | POINT OF HORIZONTAL TANGENCY |
| PRC | POINT OF HORIZONTAL REVERSE CURVATURE |
| PVI | POINT OF VERTICAL INFLECTION |
| AD | ALGEBRAIC DIFFERENCE IN GRADES |
| VC | VERTICAL CURVE |
| BVCS/ EVCS | BEGIN/END VERTICAL CURVE STATION |
| BVCE/ EVCE | BEGIN/END VERTICAL CURVE ELEVATION |
| PGL | PROPOSED GRADE LINE |
| TCE | TEMPORARY CONSTRUCTION EASEMENT |
| TP | TOP OF PAVEMENT |

Know what's **below.**
**Call** before you dig.

| No. | REVISIONS | DATE | BY |
|---|---|---|---|
| | | | |

PROJECT NO. 2021-01C/ BID NO. 21-69

Kimley»Horn
2201 WEST ROYAL LANE, SUITE 275, IRVING, TX 75063
PHONE: 214-420-5600
WWW.KIMLEY-HORN.COM
© 2021 KIMLEY-HORN AND ASSOCIATES, INC.
TEXAS REGISTERED ENGINEERING FIRM #F-928

9/10/2021
STATE OF TEXAS
RYAN DELMOTTE
114242
LICENSED
PROFESSIONAL ENGINEER

KHA PROJECT 063543031
DATE 09/10/2021
SCALE AS SHOWN
DESIGNED BY RMD
DRAWN BY CDS
CHECKED BY LNA

# TOWN OF ADDISON
ALPHA ROAD CONN.
FROM FARMERS BRANCH CREEK TO ALPHA ROAD

ALPHA ROAD CONNECTOR
PLAN AND PROFILE
STA 4+00 TO STA 8+00

SHEET NUMBER
C3.02

Plotted By-Shettyth, Cody Sep/ember 09, 2021 01:26:18pm K:\IAG-Giv\063543031_Addison-Alpha Road Connector\CADD\Pro-Sheet\Paving Plan-Profile.dwg
This document, together with the concepts and designs presented herein, as an instrument of service is intended only for the specific purpose and client for which it was prepared. Reuse of and improper reliance on this document without written authorization and adaptation by Kimley-Horn and Associates, Inc. shall be without liability to Kimley-Horn and Associates, Inc.

Plotted By-Shettigh, Cody Sep 1ember 08, 2021 - 09:05:14am K:\IAC_Civil\063543031_Addison-Alpha-Broyd_Connector\CADD\PlanSheet\Prelim_PlanAndProfile.dwg
This document, together with the concepts and designs presented herein, as an instrument of service is intended only for the specific purpose and client for which it was prepared. Reuse of and improper reliance on this document without written authorization and adaptation by Kimley-Horn and Associates, Inc. shall be without liability to Kimley-Horn and Associates, Inc.

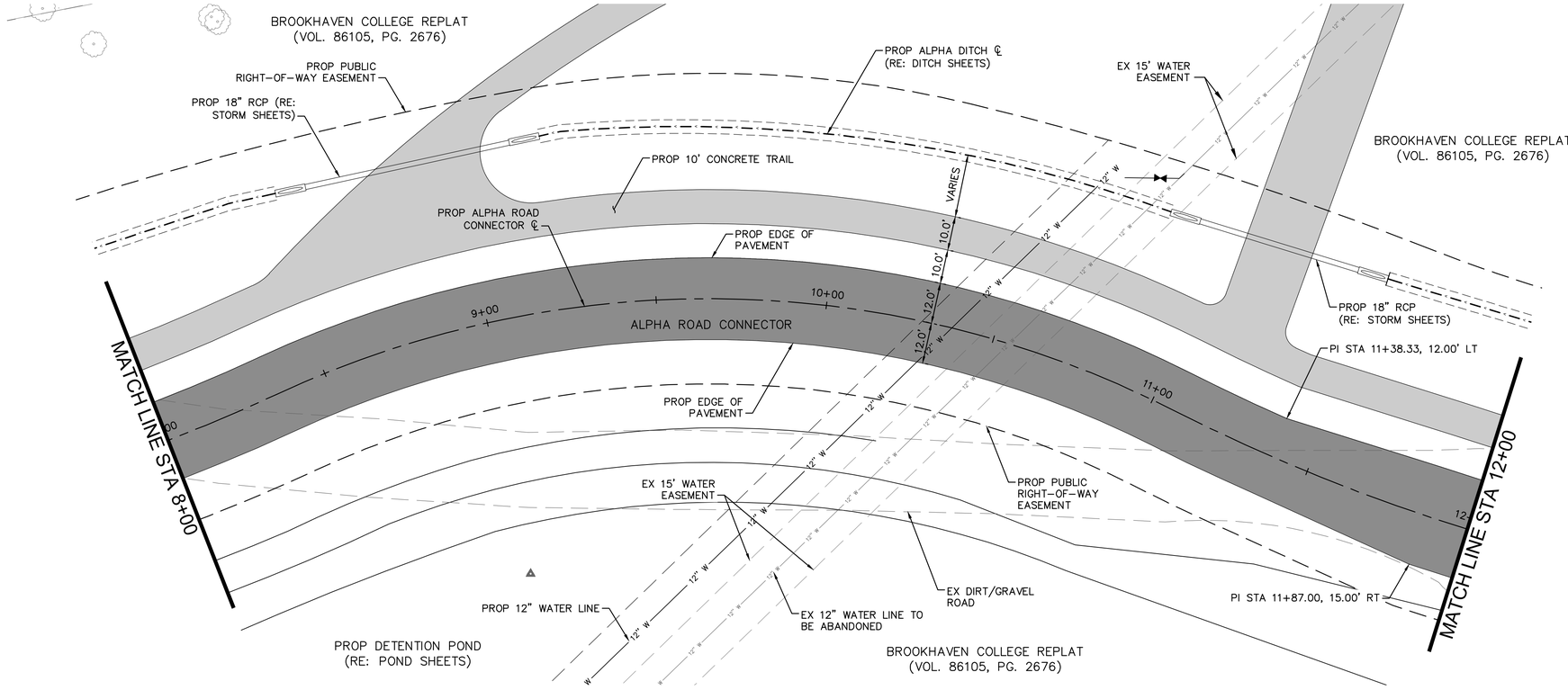


NORTH

GRAPHIC SCALE IN FEET
0 10 20 40

## LEGEND

- EX ROW
- EX EASEMENT
- PROP EASEMENT
- PROP STORM DRAIN
- PROP DITCH ℄
- PROP PAVEMENT
- PROP SIDEWALK
- PROP ASPHALT
- EX TREE
- EX TREE TO BE REMOVED

## NOTES

1. CONTRACTOR IS RESPONSIBLE FOR RELOCATION OF ANY SIGNS AND COORDINATION WITH THE CITY ON ANY NECESSARY MODIFICATIONS.
2. CONTRACTOR IS RESPONSIBLE FOR LOCATING ALL IRRIGATION FACILITIES WITHIN LOC.
3. THE EXISTENCE AND LOCATIONS OF ALL UNDERGROUND UTILITIES SHOWN ON THE DRAWINGS WERE OBTAINED FROM AVAILABLE RECORDS AND ARE APPROXIMATE. NEITHER THE OWNER NOR THE ENGINEER ASSUMES ANY RESPONSIBILITY FOR UTILITIES NOT SHOWN OR NOT IN THE LOCATION SHOWN. THE CONTRACTOR SHALL DETERMINE THE DEPTH AND LOCATION OF EXISTING UNDERGROUND UTILITIES PRIOR TO EXCAVATION AND SHALL BE REQUIRED TO TAKE ANY PRECAUTIONARY MEASURES TO PROTECT ALL LINES SHOWN AND/ OR ANY OTHER UNDERGROUND UTILITIES NOT OF RECORD OR NOT SHOWN ON THE PLANS. CONTRACTOR SHALL BE RESPONSIBLE FOR CONTACTING ALL FRANCHISE AND CITY UTILITIES PRIOR TO CONSTRUCTION.
4. ELEV ARE TOP OF PAVEMENT UNLESS OTHERWISE NOTED.

| | |
|---|---|
| EX | EXISTING |
| PROP | PROPOSED |
| STA | STATION |
| EL | ELEVATION |
| PI | POINT OF HORIZONTAL INFLECTION |
| PC | POINT OF HORIZONTAL CURVATURE |
| PT | POINT OF HORIZONTAL TANGENCY |
| PRC | POINT OF HORIZONTAL REVERSE CURVATURE |
| PVI | POINT OF VERTICAL INFLECTION |
| AD | ALGEBRAIC DIFFERENCE IN GRADES |
| VC | VERTICAL CURVE |
| BVCS/ EVCS | BEGIN/END VERTICAL CURVE STATION |
| BVCE/ EVCE | BEGIN/END VERTICAL CURVE ELEVATION |
| PGL | PROPOSED GRADE LINE |
| TCE | TEMPORARY CONSTRUCTION EASEMENT |
| TP | TOP OF PAVEMENT |

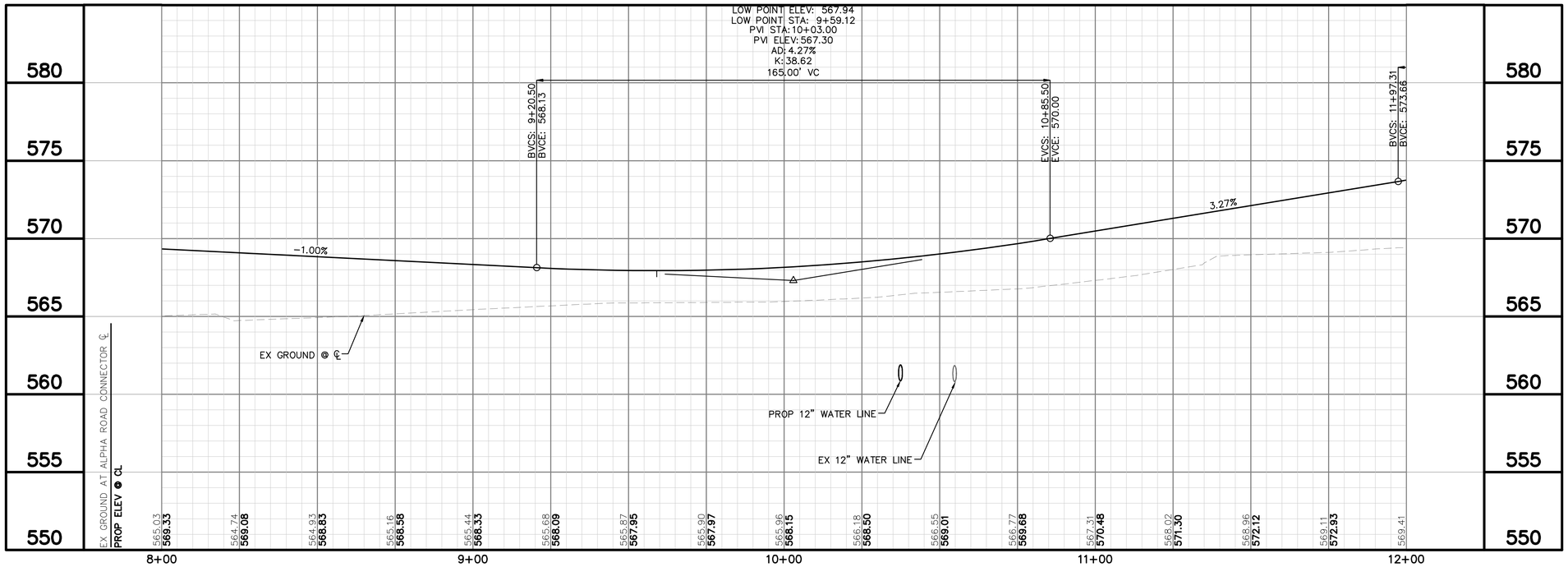


811 Know what's below. Call before you dig.

Kimley»Horn
2201 WEST ROYAL LANE, SUITE 275, IRVING, TX 75063
PHONE: 214-420-5600
WWW.KIMLEY-HORN.COM
© 2021 KIMLEY-HORN AND ASSOCIATES, INC.
TEXAS REGISTERED ENGINEERING FIRM #F-928

9/10/2021
STATE OF TEXAS
RYAN DELMOTTE
114242
LICENSED
PROFESSIONAL ENGINEER

| No. | REVISIONS | DATE | BY |
|---|---|---|---|
| | | | |

PROJECT NO. 2021-01C/ BID NO. 21-69

KHA PROJECT 063543031
DATE 09/10/2021
SCALE AS SHOWN
DESIGNED BY RMD
DRAWN BY CDS
CHECKED BY LNA

# TOWN OF ADDISON
ALPHA ROAD CONN.
FROM FARMERS BRANCH
CREEK TO ALPHA ROAD

# ALPHA ROAD CONNECTOR
PLAN AND PROFILE
STA 8+00 TO STA 12+00

SHEET NUMBER
C3.03

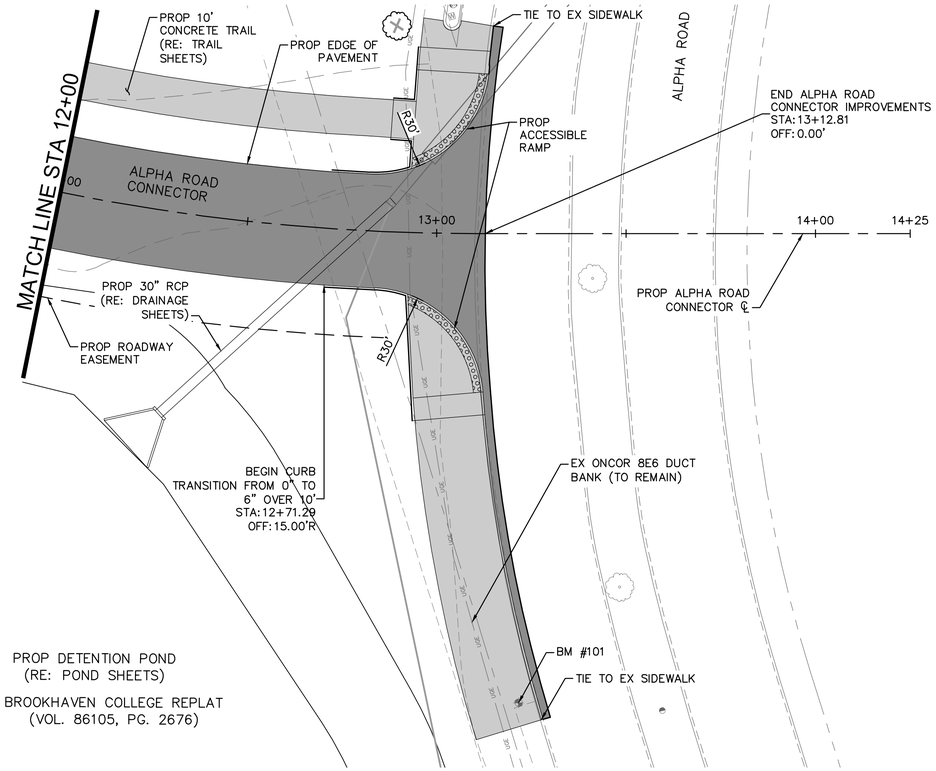


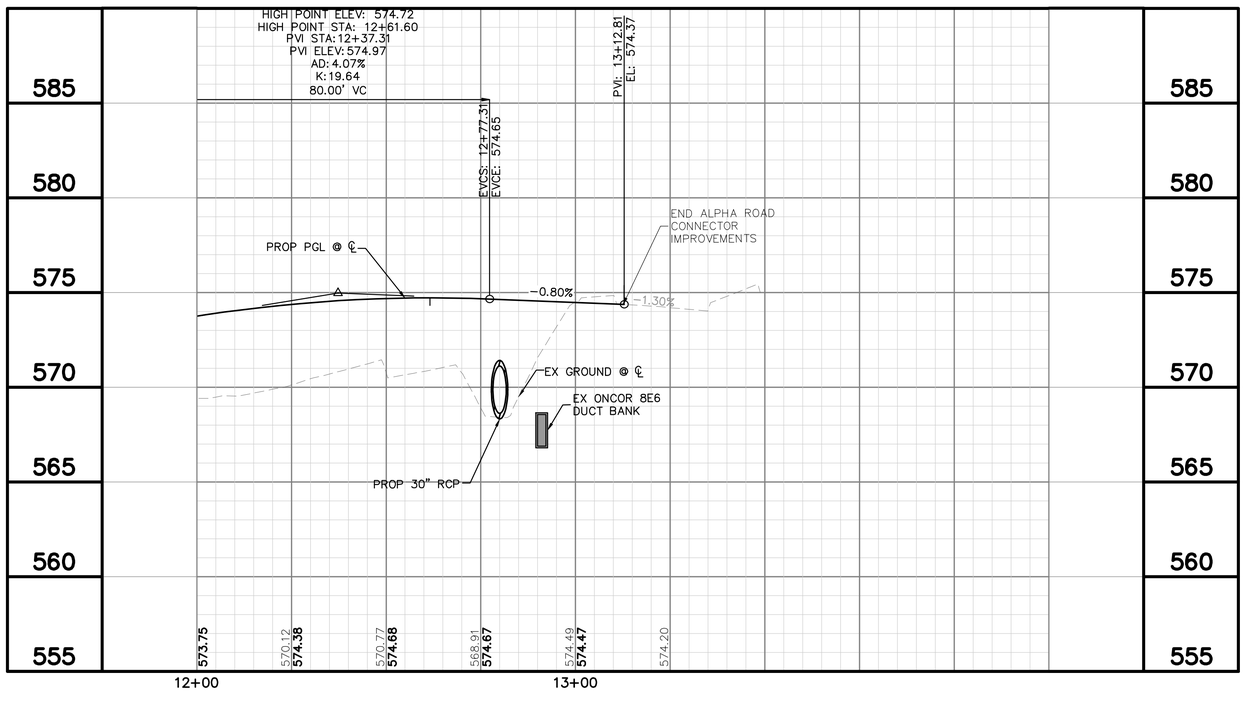





GRAPHIC SCALE IN FEET
0 10 20 40

## LEGEND

- EX ROW
- EX EASEMENT
- PROP EASEMENT
- PROP STORM DRAIN
- PROP DITCH ℄
- PROP PAVEMENT
- PROP SIDEWALK
- PROP ASPHALT
- EX TREE
- EX TREE TO BE REMOVED

## NOTES

1. CONTRACTOR IS RESPONSIBLE FOR RELOCATION OF ANY SIGNS AND COORDINATION WITH THE CITY ON ANY NECESSARY MODIFICATIONS.
2. CONTRACTOR IS RESPONSIBLE FOR LOCATING ALL IRRIGATION FACILITIES WITHIN LOC.
3. THE EXISTENCE AND LOCATIONS OF ALL UNDERGROUND UTILITIES SHOWN ON THE DRAWINGS WERE OBTAINED FROM AVAILABLE RECORDS AND ARE APPROXIMATE. NEITHER THE OWNER NOR THE ENGINEER ASSUMES ANY RESPONSIBILITY FOR UTILITIES NOT SHOWN OR NOT IN THE LOCATION SHOWN. THE CONTRACTOR SHALL DETERMINE THE DEPTH AND LOCATION OF EXISTING UNDERGROUND UTILITIES PRIOR TO EXCAVATION AND SHALL BE REQUIRED TO TAKE ANY PRECAUTIONARY MEASURES TO PROTECT ALL LINES SHOWN AND/ OR ANY OTHER UNDERGROUND UTILITIES NOT OF RECORD OR NOT SHOWN ON THE PLANS. CONTRACTOR SHALL BE RESPONSIBLE FOR CONTACTING ALL FRANCHISE AND CITY UTILITIES PRIOR TO CONSTRUCTION.
4. ELEV ARE TOP OF PAVEMENT UNLESS OTHERWISE NOTED.

| | |
|---|---|
| EX | EXISTING |
| PROP | PROPOSED |
| STA | STATION |
| EL | ELEVATION |
| PI | POINT OF HORIZONTAL INFLECTION |
| PC | POINT OF HORIZONTAL CURVATURE |
| PT | POINT OF HORIZONTAL TANGENCY |
| PRC | POINT OF HORIZONTAL REVERSE CURVATURE |
| PVI | POINT OF VERTICAL INFLECTION |
| AD | ALGEBRAIC DIFFERENCE IN GRADES |
| VC | VERTICAL CURVE |
| BVCS/ EVCS | BEGIN/END VERTICAL CURVE STATION |
| BVCE/ EVCE | BEGIN/END VERTICAL CURVE ELEVATION |
| PGL | PROPOSED GRADE LINE |
| TCE | TEMPORARY CONSTRUCTION EASEMENT |
| TP | TOP OF PAVEMENT |

Know what's **below.**
**Call** before you dig.

| No. | REVISIONS | DATE | BY |
|---|---|---|---|
| | | | |

PROJECT NO. 2021-01C/ BID NO. 21-69

Kimley»Horn
2201 WEST ROYAL LANE, SUITE 275, IRVING, TX 75063
PHONE: 214-420-5600
WWW.KIMLEY-HORN.COM
© 2021 KIMLEY-HORN AND ASSOCIATES, INC.
TEXAS REGISTERED ENGINEERING FIRM #F-928

9/10/2021

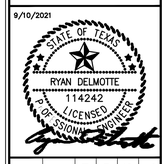


KHA PROJECT 063543031
DATE 09/10/2021
SCALE AS SHOWN
DESIGNED BY RMD
DRAWN BY CDS
CHECKED BY LNA

**TOWN OF ADDISON**
ALPHA ROAD CONN.
FROM FARMERS BRANCH CREEK TO ALPHA ROAD

# ALPHA ROAD CONNECTOR PLAN AND PROFILE STA 12+00 TO END

SHEET NUMBER
C3.04

Plotted By-Shettyh, Only Saturday, 09, 2021 09:09:21pm K:\IAC_Civil\063543031_Addison-Alpha-Royal_Connector\CADD\PlanSheet\Prints_PlanPrintSet.
This document, together with the concepts and designs presented herein, as an instrument of service is intended only for the specific purpose and client for which it was prepared. Reuse of and improper reliance on this document without written authorization and adaptation by Kimley-Horn and Associates, Inc. shall be without liability to Kimley-Horn and Associates, Inc.

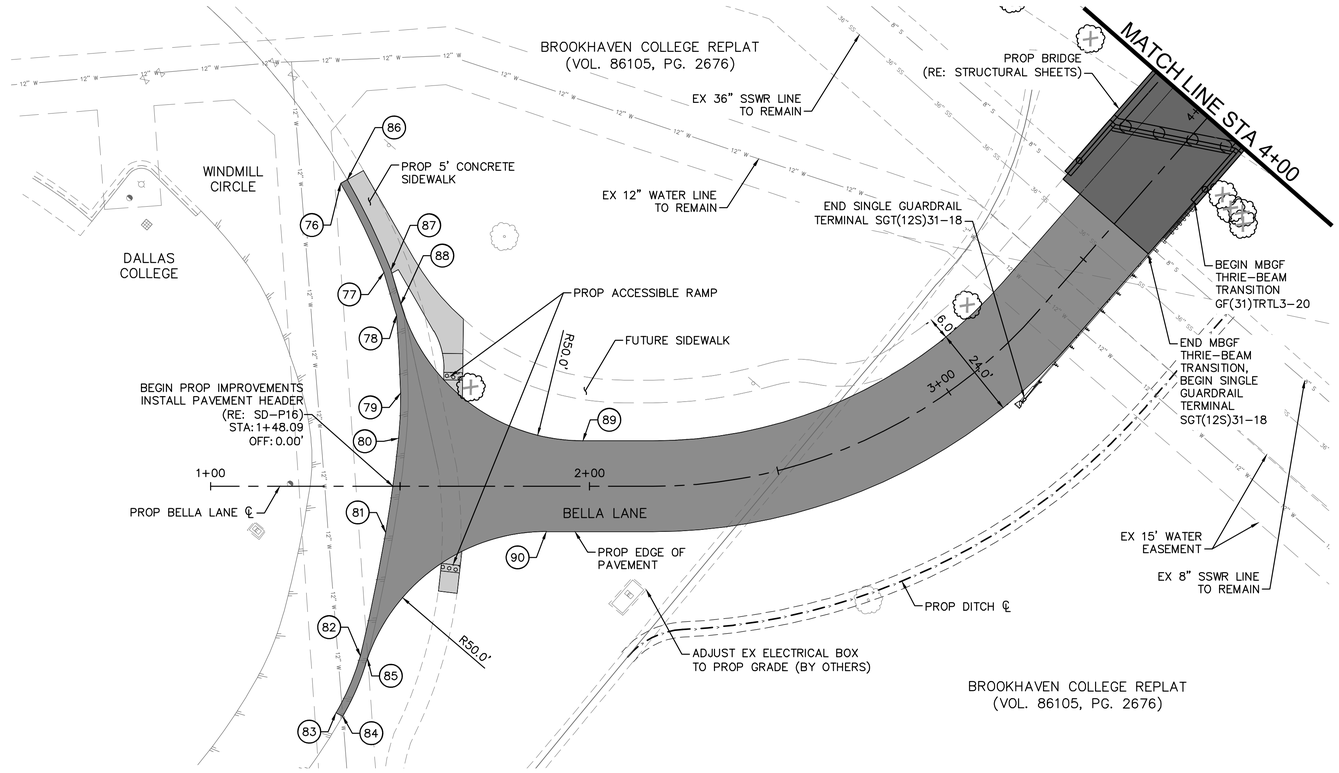


| POINT NO. | DESCRIPTION | ALIGNMENT | STATION | OFFSET | ELEV |
|---|---|---|---|---|---|
| 76 | PI–SC | BELLA LANE EXT | 1+34.35 | 79.88' L | 560.77' |
| 77 | PI–SC | BELLA LANE EXT | 1+45.71 | 56.37' L | 561.30' |
| 78 | PI–SC | BELLA LANE EXT | 1+49.05 | 45.10' L | 561.56' |
| 79 | PI–SC | BELLA LANE EXT | 1+50.10 | 24.57' L | 561.76' |
| 80 | PI–SC | BELLA LANE EXT | 1+49.60 | 12.65' L | 561.97' |
| 81 | PI–SC | BELLA LANE EXT | 1+46.20 | 12.25' R | 562.60' |
| 82 | PI–SC | BELLA LANE EXT | 1+39.51 | 44.82' R | 563.39' |
| 83 | PI–SC | BELLA LANE EXT | 1+33.07 | 59.81' R | 563.73' |
| 84 | PI | BELLA LANE EXT | 1+34.84 | 60.74' R | 563.70' |
| 85 | PC | BELLA LANE EXT | 1+41.39 | 45.46' R | 563.36' |
| 86 | PI–SC | BELLA LANE EXT | 1+36.08 | 80.87' L | 560.74' |
| 87 | PI–SC | BELLA LANE EXT | 1+47.61 | 57.02' L | 561.28' |
| 88 | PC | BELLA LANE EXT | 1+50.21 | 48.05' L | 561.35' |
| 89 | PT | BELLA LANE EXT | 1+98.23 | 12.00' L | 562.97' |
| 90 | PT | BELLA LANE EXT | 1+88.59 | 12.00' R | 563.25' |

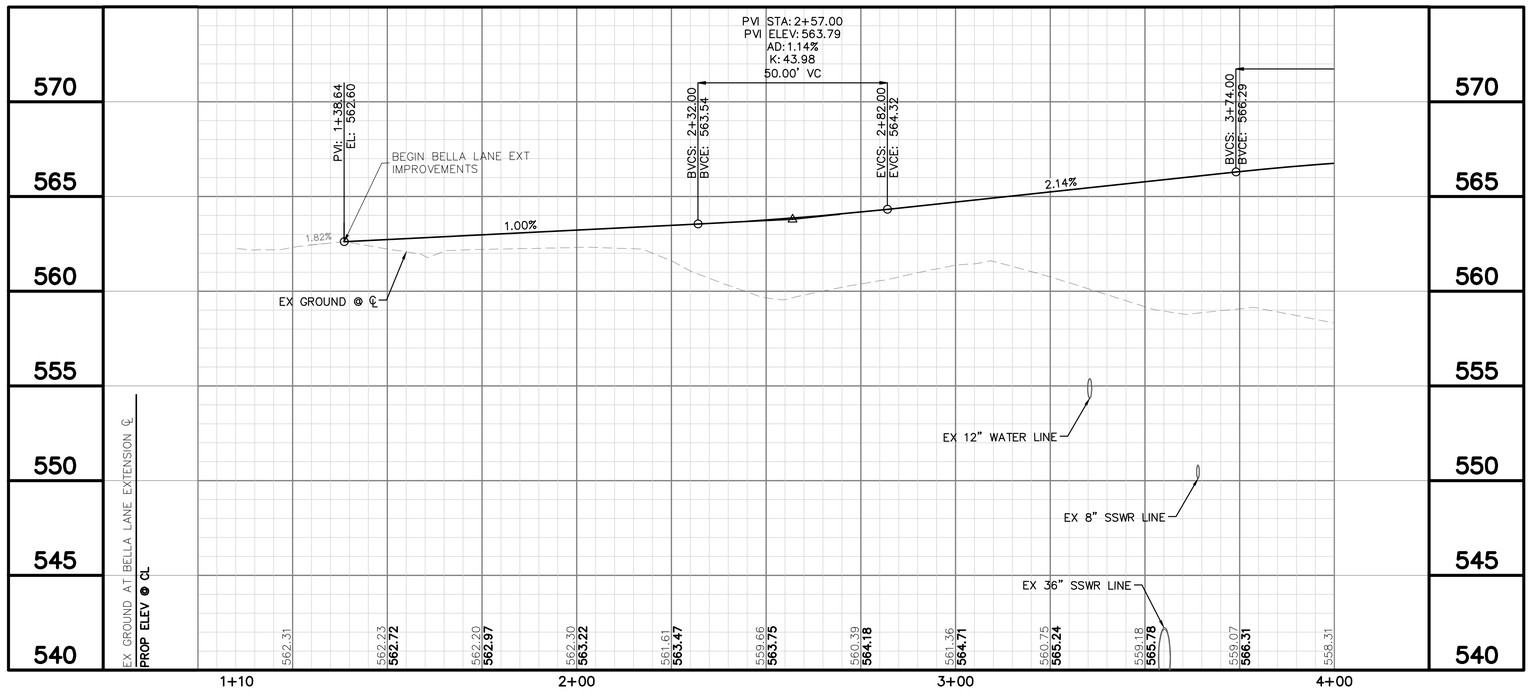


NORTH

GRAPHIC SCALE IN FEET
0 10 20 40

LEGEND

- EX ROW
- EX EASEMENT
- PROP EASEMENT
- PROP STORM DRAIN
- PROP DITCH ℄
- PROP PAVEMENT
- PROP SIDEWALK
- PROP ASPHALT
- EX TREE
- EX TREE TO BE REMOVED

## NOTES

1. CONTRACTOR IS RESPONSIBLE FOR RELOCATION OF ANY SIGNS AND COORDINATION WITH THE CITY ON ANY NECESSARY MODIFICATIONS.
2. CONTRACTOR IS RESPONSIBLE FOR LOCATING ALL IRRIGATION FACILITIES WITHIN LOC.
3. THE EXISTENCE AND LOCATIONS OF ALL UNDERGROUND UTILITIES SHOWN ON THE DRAWINGS WERE OBTAINED FROM AVAILABLE RECORDS AND ARE APPROXIMATE. NEITHER THE OWNER NOR THE ENGINEER ASSUMES ANY RESPONSIBILITY FOR UTILITIES NOT SHOWN OR NOT IN THE LOCATION SHOWN. THE CONTRACTOR SHALL DETERMINE THE DEPTH AND LOCATION OF EXISTING UNDERGROUND UTILITIES PRIOR TO EXCAVATION AND SHALL BE REQUIRED TO TAKE ANY PRECAUTIONARY MEASURES TO PROTECT ALL LINES SHOWN AND/ OR ANY OTHER UNDERGROUND UTILITIES NOT OF RECORD OR NOT SHOWN ON THE PLANS. CONTRACTOR SHALL BE RESPONSIBLE FOR CONTACTING ALL FRANCHISE AND CITY UTILITIES PRIOR TO CONSTRUCTION.
4. ELEV ARE TOP OF PAVEMENT UNLESS OTHERWISE NOTED.

| | |
|---|---|
| EX | EXISTING |
| PROP | PROPOSED |
| STA | STATION |
| EL | ELEVATION |
| PI | POINT OF HORIZONTAL INFLECTION |
| PC | POINT OF HORIZONTAL CURVATURE |
| PT | POINT OF HORIZONTAL TANGENCY |
| PRC | POINT OF HORIZONTAL REVERSE CURVATURE |
| PVI | POINT OF VERTICAL INFLECTION |
| AD | ALGEBRAIC DIFFERENCE IN GRADES |
| VC | VERTICAL CURVE |
| BVCS/ EVCS | BEGIN/END VERTICAL CURVE STATION |
| BVCE/ EVCE | BEGIN/END VERTICAL CURVE ELEVATION |
| PGL | PROPOSED GRADE LINE |
| TCE | TEMPORARY CONSTRUCTION EASEMENT |
| TP | TOP OF PAVEMENT |

811 Know what's below. Call before you dig.

| No. | REVISIONS | DATE | BY |
|---|---|---|---|
| | | | |

PROJECT NO. 2021-01C/ BID NO. 21-69

Kimley»Horn
2201 WEST ROYAL LANE, SUITE 275, IRVING, TX 75063
PHONE: 214-420-5600
WWW.KIMLEY-HORN.COM
© 2021 KIMLEY-HORN AND ASSOCIATES, INC.
TEXAS REGISTERED ENGINEERING FIRM #F-928

9/10/2021
STATE OF TEXAS
RYAN DELMOTTE
114242
LICENSED
PROFESSIONAL ENGINEER

KHA PROJECT 063543031
DATE 09/10/2021
SCALE AS SHOWN
DESIGNED BY RMD
DRAWN BY CDS
CHECKED BY LNA

**TOWN OF ADDISON**
ALPHA ROAD CONN.
FROM FARMERS BRANCH
CREEK TO ALPHA ROAD

# BELLA LANE EXTENSION
## PLAN AND PROFILE
BEGIN TO STA 4+00

SHEET NUMBER
C3.05

Plotted By-Shettigh, Cody Sep 10, 2021 - 09:09:31am K:\IAC_Civil\063543031_Addison-Alpha_Bryan_Connector\CADD\PlanSheet\Prints_Plots\Plan-Profile.dwg
This document, together with the concepts and designs presented herein, as an instrument of service is intended only for the specific purpose and client for which it was prepared. Reuse of and improper reliance on this document without written authorization and adaptation by Kimley-Horn and Associates, Inc. shall be without liability to Kimley-Horn and Associates, Inc.

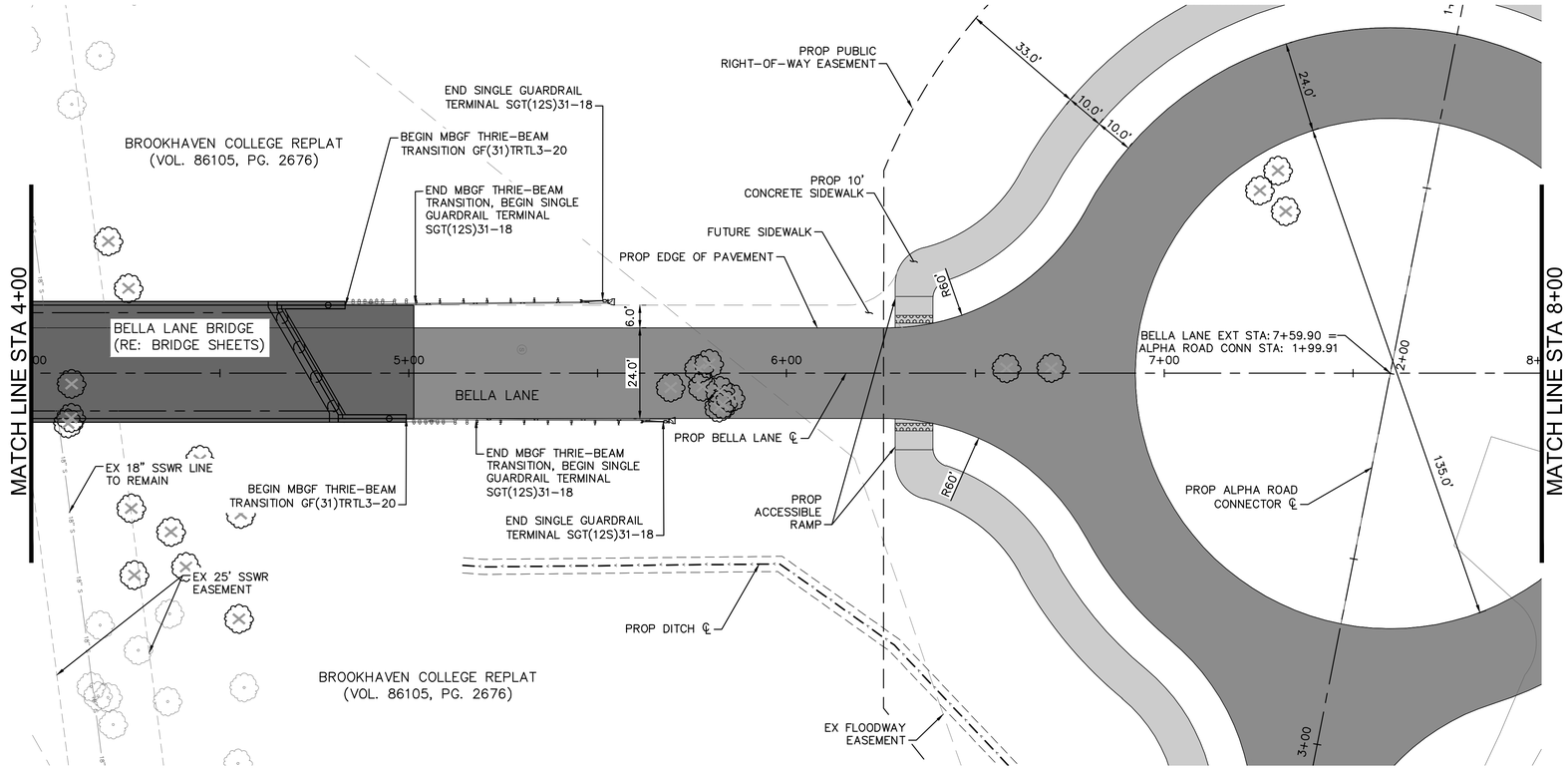


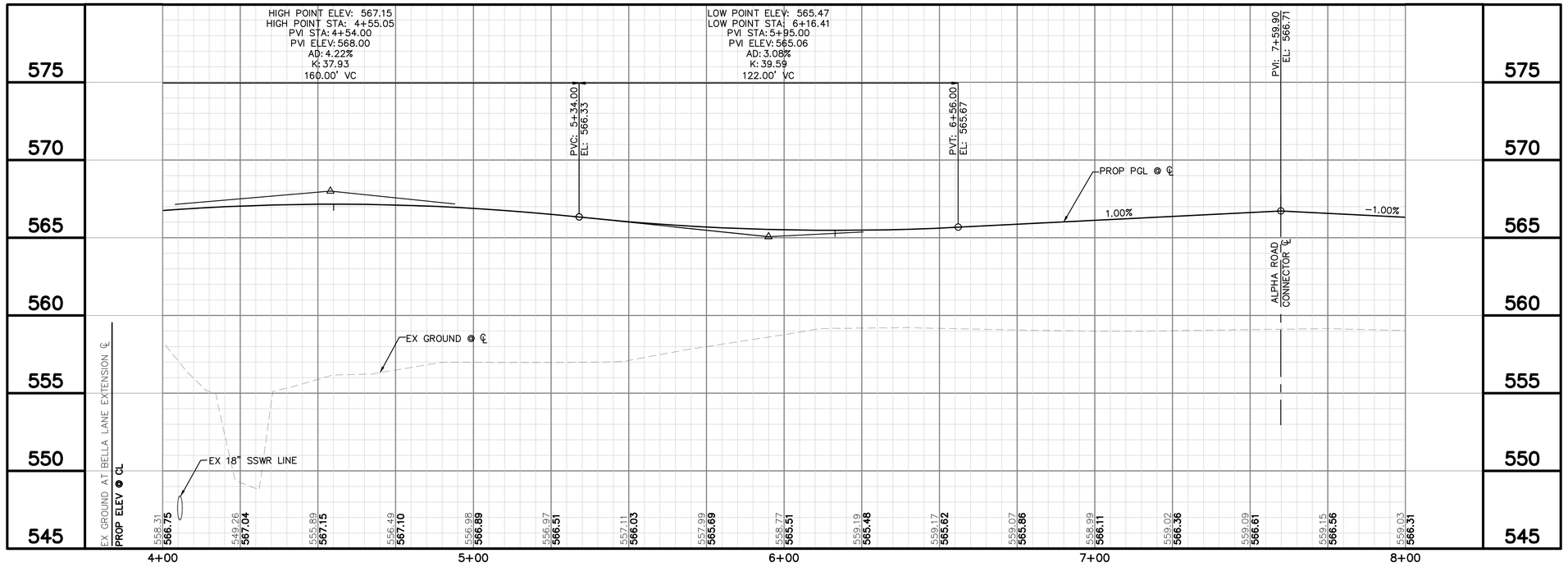





GRAPHIC SCALE IN FEET
0 10 20 40

## LEGEND

- EX ROW
- EX EASEMENT
- PROP EASEMENT
- PROP STORM DRAIN
- PROP DITCH ℄
- PROP PAVEMENT
- PROP SIDEWALK
- PROP ASPHALT
- EX TREE
- EX TREE TO BE REMOVED

## NOTES

1. CONTRACTOR IS RESPONSIBLE FOR RELOCATION OF ANY SIGNS AND COORDINATION WITH THE CITY ON ANY NECESSARY MODIFICATIONS.
2. CONTRACTOR IS RESPONSIBLE FOR LOCATING ALL IRRIGATION FACILITIES WITHIN LOC.
3. THE EXISTENCE AND LOCATIONS OF ALL UNDERGROUND UTILITIES SHOWN ON THE DRAWINGS WERE OBTAINED FROM AVAILABLE RECORDS AND ARE APPROXIMATE. NEITHER THE OWNER NOR THE ENGINEER ASSUMES ANY RESPONSIBILITY FOR UTILITIES NOT SHOWN OR NOT IN THE LOCATION SHOWN. THE CONTRACTOR SHALL DETERMINE THE DEPTH AND LOCATION OF EXISTING UNDERGROUND UTILITIES PRIOR TO EXCAVATION AND SHALL BE REQUIRED TO TAKE ANY PRECAUTIONARY MEASURES TO PROTECT ALL LINES SHOWN AND/ OR ANY OTHER UNDERGROUND UTILITIES NOT OF RECORD OR NOT SHOWN ON THE PLANS. CONTRACTOR SHALL BE RESPONSIBLE FOR CONTACTING ALL FRANCHISE AND CITY UTILITIES PRIOR TO CONSTRUCTION.
4. ELEV ARE TOP OF PAVEMENT UNLESS OTHERWISE NOTED.

| | |
|---|---|
| EX | EXISTING |
| PROP | PROPOSED |
| STA | STATION |
| EL | ELEVATION |
| PI | POINT OF HORIZONTAL INFLECTION |
| PC | POINT OF HORIZONTAL CURVATURE |
| PT | POINT OF HORIZONTAL TANGENCY |
| PRC | POINT OF HORIZONTAL REVERSE CURVATURE |
| PVI | POINT OF VERTICAL INFLECTION |
| AD | ALGEBRAIC DIFFERENCE IN GRADES |
| VC | VERTICAL CURVE |
| BVCS/ EVCS | BEGIN/END VERTICAL CURVE STATION |
| BVCE/ EVCE | BEGIN/END VERTICAL CURVE ELEVATION |
| PGL | PROPOSED GRADE LINE |
| TCE | TEMPORARY CONSTRUCTION EASEMENT |
| TP | TOP OF PAVEMENT |

Know what's **below.**
**Call** before you dig.

| No. | REVISIONS | DATE | BY |
|---|---|---|---|
| | | | |

PROJECT NO. 2021-01C/ BID NO. 21-69

Kimley»Horn
2201 WEST ROYAL LANE, SUITE 275, IRVING, TX 75063
PHONE: 214-420-5600
WWW.KIMLEY-HORN.COM
© 2021 KIMLEY-HORN AND ASSOCIATES, INC.
TEXAS REGISTERED ENGINEERING FIRM #F-928

9/10/2021
STATE OF TEXAS
RYAN DELMOTTE
114242
LICENSED PROFESSIONAL ENGINEER

| | |
|---|---|
| KHA PROJECT | 063543031 |
| DATE | 09/10/2021 |
| SCALE | AS SHOWN |
| DESIGNED BY | RMD |
| DRAWN BY | CDS |
| CHECKED BY | LNA |

# TOWN OF ADDISON
## ALPHA ROAD CONN. FROM FARMERS BRANCH CREEK TO ALPHA ROAD

# BELLA LANE EXTENSION
## PLAN AND PROFILE
STA 4+00 TO STA 8+00

SHEET NUMBER
C3.06

Plotted By: Shuttloth, Cody Saturday, 09, 2021 - 09:09:41pm K:\ALC_Civil\063543031_Addison-Alpha-Royal_Connector\CADD\PrintSheets\Preview_PlanAndProfile.dwg
This document, together with the concepts and designs presented herein, as an instrument of service is intended only for the specific purpose and client for which it was prepared. Reuse of and improper reliance on this document without written authorization and adaptation by Kimley-Horn and Associates, Inc. shall be without liability to Kimley-Horn and Associates, Inc.

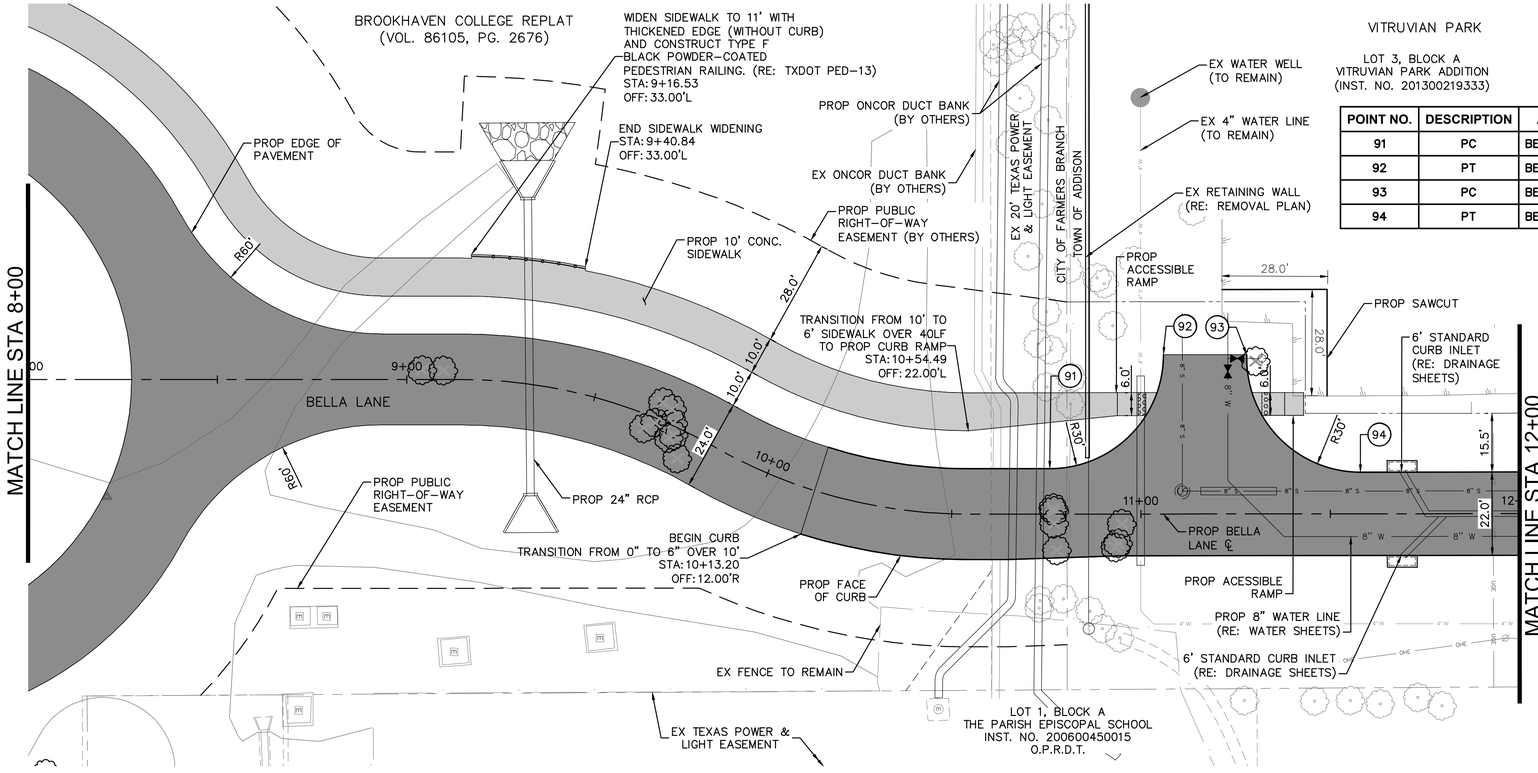


| POINT NO. | DESCRIPTION | ALIGNMENT | STATION | OFFSET | ELEV |
|---|---|---|---|---|---|
| 91 | PC | BELLA LANE EXT | 10+75.93 | 12.00' L | 562.13' |
| 92 | PT | BELLA LANE EXT | 11+05.93 | 42.00' L | 562.11' |
| 93 | PC | BELLA LANE EXT | 11+27.93 | 41.99' L | 562.11' |
| 94 | PT | BELLA LANE EXT | 11+57.93 | 11.00' L | 561.57' |

GRAPHIC SCALE IN FEET
0 10 20 40

NORTH

LEGEND

- EX ROW
- EX EASEMENT
- PROP EASEMENT
- PROP STORM DRAIN
- PROP DITCH ℄
- PROP PAVEMENT
- PROP SIDEWALK
- PROP ASPHALT
- EX TREE
- EX TREE TO BE REMOVED

## NOTES

1. CONTRACTOR IS RESPONSIBLE FOR RELOCATION OF ANY SIGNS AND COORDINATION WITH THE CITY ON ANY NECESSARY MODIFICATIONS.
2. CONTRACTOR IS RESPONSIBLE FOR LOCATING ALL IRRIGATION FACILITIES WITHIN LOC.
3. THE EXISTENCE AND LOCATIONS OF ALL UNDERGROUND UTILITIES SHOWN ON THE DRAWINGS WERE OBTAINED FROM AVAILABLE RECORDS AND ARE APPROXIMATE. NEITHER THE OWNER NOR THE ENGINEER ASSUMES ANY RESPONSIBILITY FOR UTILITIES NOT SHOWN OR NOT IN THE LOCATION SHOWN. THE CONTRACTOR SHALL DETERMINE THE DEPTH AND LOCATION OF EXISTING UNDERGROUND UTILITIES PRIOR TO EXCAVATION AND SHALL BE REQUIRED TO TAKE ANY PRECAUTIONARY MEASURES TO PROTECT ALL LINES SHOWN AND/ OR ANY OTHER UNDERGROUND UTILITIES NOT OF RECORD OR NOT SHOWN ON THE PLANS. CONTRACTOR SHALL BE RESPONSIBLE FOR CONTACTING ALL FRANCHISE AND CITY UTILITIES PRIOR TO CONSTRUCTION.
4. ELEV ARE TOP OF PAVEMENT UNLESS OTHERWISE NOTED.

| | |
|---|---|
| EX | EXISTING |
| PROP | PROPOSED |
| STA | STATION |
| EL | ELEVATION |
| PI | POINT OF HORIZONTAL INFLECTION |
| PC | POINT OF HORIZONTAL CURVATURE |
| PT | POINT OF HORIZONTAL TANGENCY |
| PRC | POINT OF HORIZONTAL REVERSE CURVATURE |
| PVI | POINT OF VERTICAL INFLECTION |
| AD | ALGEBRAIC DIFFERENCE IN GRADES |
| VC | VERTICAL CURVE |
| BVCS/ EVCS | BEGIN/END VERTICAL CURVE STATION |
| BVCE/ EVCE | BEGIN/END VERTICAL CURVE ELEVATION |
| PGL | PROPOSED GRADE LINE |
| TCE | TEMPORARY CONSTRUCTION EASEMENT |
| TP | TOP OF PAVEMENT |

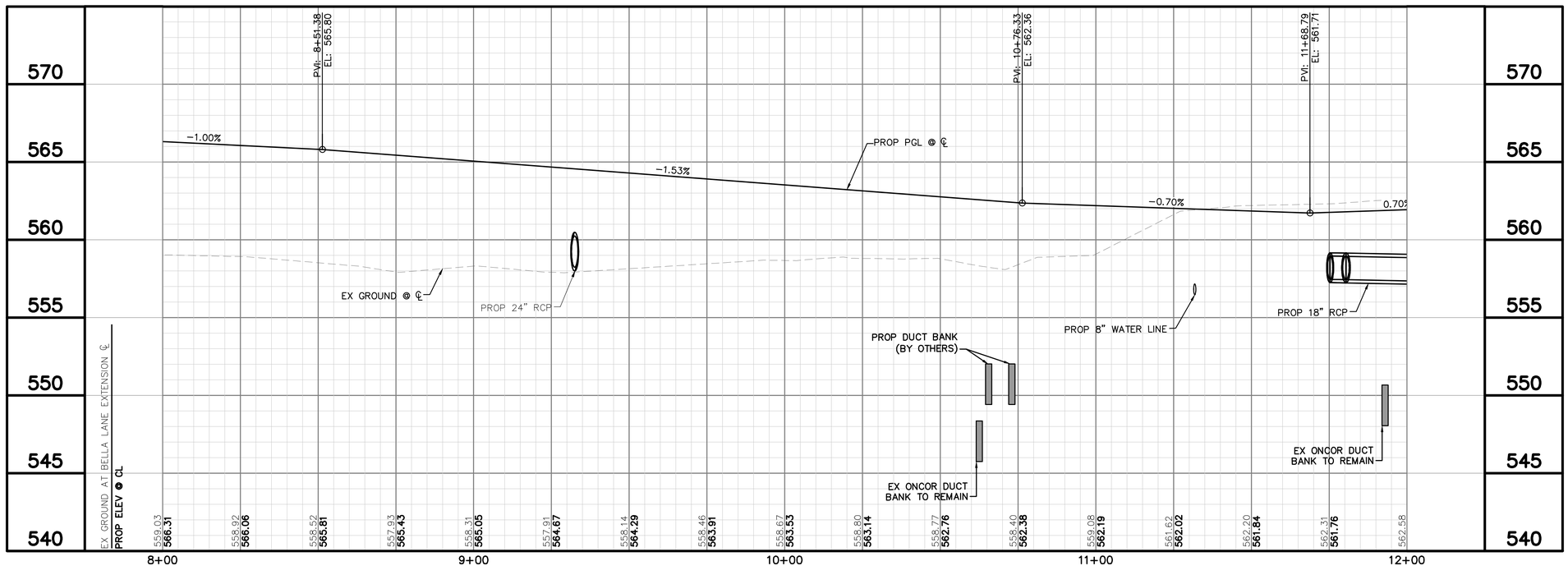


811 Know what's below. Call before you dig.

Kimley»Horn
2201 WEST ROYAL LANE, SUITE 275, IRVING, TX 75063
PHONE: 214-420-5600
WWW.KIMLEY-HORN.COM
© 2021 KIMLEY-HORN AND ASSOCIATES, INC.
TEXAS REGISTERED ENGINEERING FIRM #F-928

9/10/2021
STATE OF TEXAS
RYAN DELMOTTE
114242
LICENSED
PROFESSIONAL ENGINEER

| No. | REVISIONS | DATE | BY |
|---|---|---|---|

PROJECT NO. 2021-01C/ BID NO. 21-69

KHA PROJECT 063543031
DATE 09/10/2021
SCALE AS SHOWN
DESIGNED BY RMD
DRAWN BY CDS
CHECKED BY LNA

# TOWN OF ADDISON
ALPHA ROAD CONN.
FROM FARMERS BRANCH CREEK TO ALPHA ROAD

# BELLA LANE EXTENSION
PLAN AND PROFILE
STA 8+00 TO STA 12+00

SHEET NUMBER
C3.07

Plotted By-Shettigh, Cody Sep 10, 2021 - 09:09:50pm K:\IAC_Dal\063543031_Addison_Alpha_Road_Connector\CAD\PlanSheet\Paving Plan&Profile.dwg
This document, together with the concepts and designs presented herein, as an instrument of service is intended only for the specific purpose and client for which it was prepared. Reuse of and improper reliance on this document without written authorization and adaptation by Kimley-Horn and Associates, Inc. shall be without liability to Kimley-Horn and Associates, Inc.

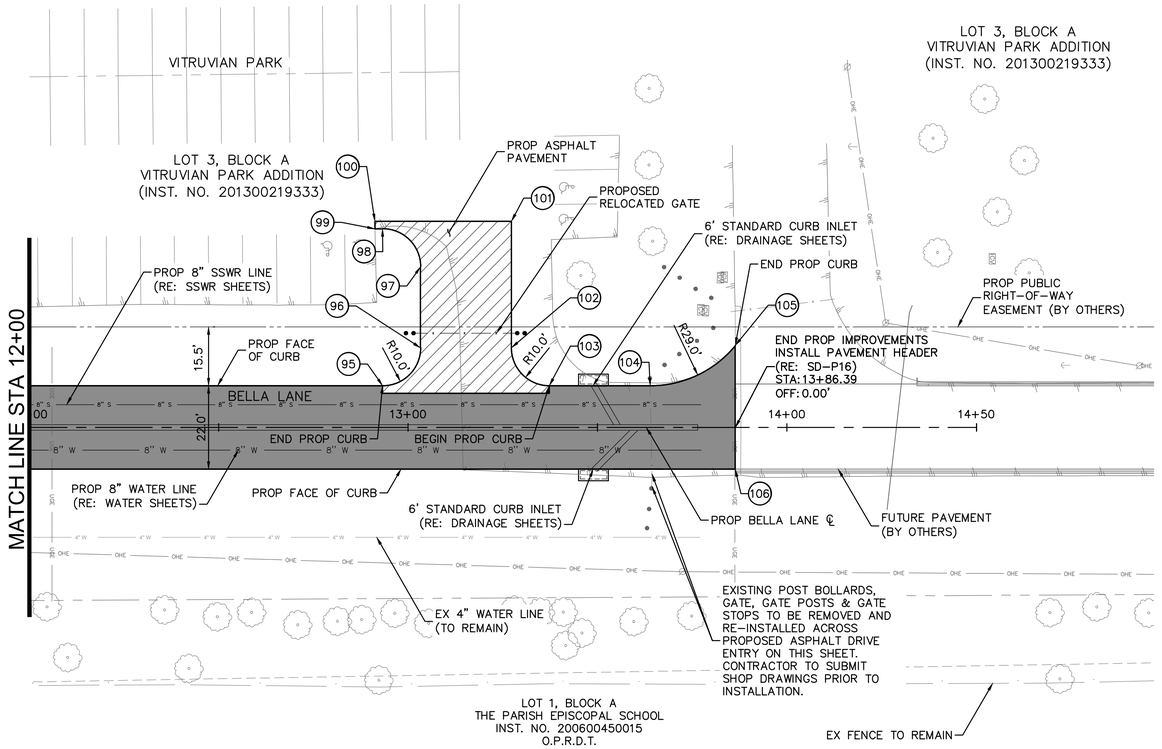


| POINT NO. | DESCRIPTION | ALIGNMENT | STATION | OFFSET | ELEV |
|---|---|---|---|---|---|
| 95 | PC | BELLA LANE EXT | 12+93.27 | 11.00' L | 561.88' |
| 96 | PT | BELLA LANE EXT | 13+03.27 | 21.00' L | 562.82' |
| 97 | PC | BELLA LANE EXT | 13+03.27 | 42.37' L | 564.46' |
| 98 | PT | BELLA LANE EXT | 12+93.27 | 52.37' L | 564.54' |
| 99 | PI | BELLA LANE EXT | 12+91.27 | 52.37' L | 564.55' |
| 100 | PI | BELLA LANE EXT | 12+91.27 | 54.37' L | 564.57' |
| 101 | PI | BELLA LANE EXT | 13+27.27 | 54.37' L | 564.61' |
| 102 | PC | BELLA LANE EXT | 13+27.27 | 21.00' L | 562.54' |
| 103 | PT | BELLA LANE EXT | 13+37.27 | 11.00' L | 561.57' |
| 104 | PC | BELLA LANE EXT | 13+63.89 | 10.99' L | 561.60' |
| 105 | PI | BELLA LANE EXT | 13+86.29 | 21.55' L | 561.54' |
| 106 | PI | BELLA LANE EXT | 13+86.30 | 10.99' R | 561.75' |

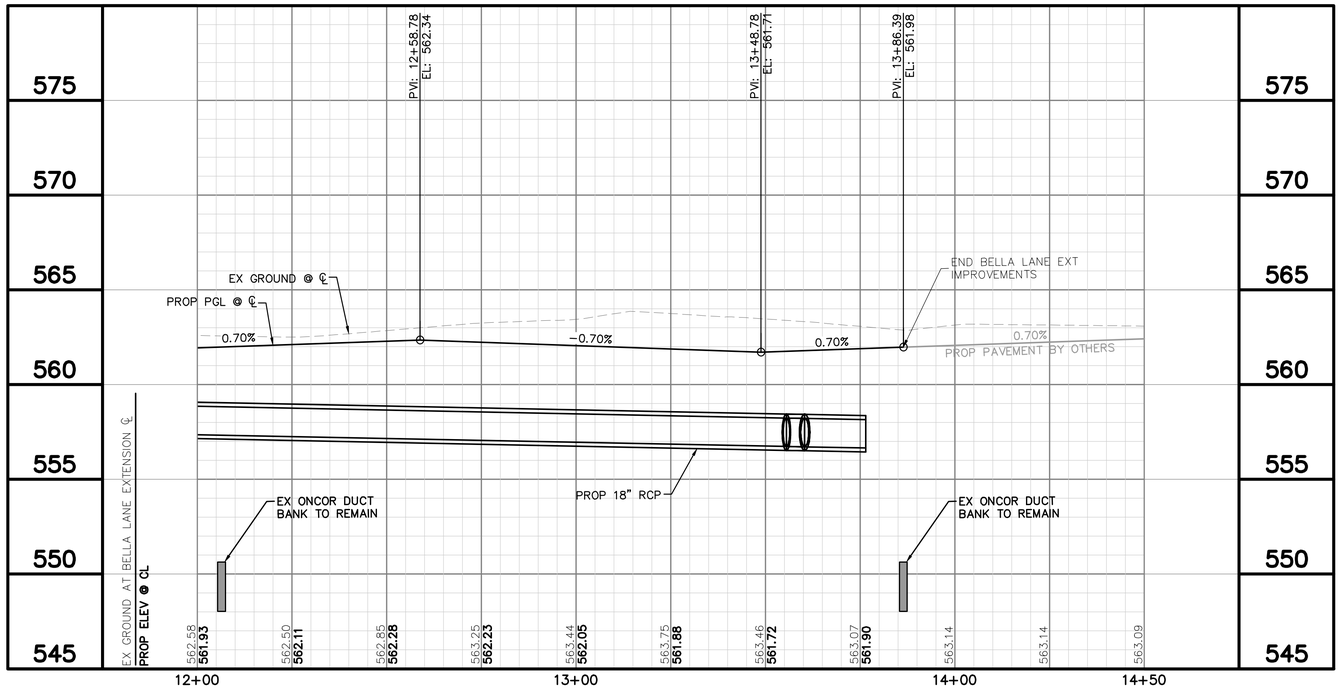


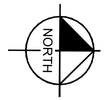


GRAPHIC SCALE IN FEET
0 10 20 40

LEGEND

- EX ROW
- EX EASEMENT
- PROP EASEMENT
- PROP STORM DRAIN
- PROP DITCH ℄
- PROP PAVEMENT
- PROP SIDEWALK
- PROP ASPHALT
- EX TREE
- EX TREE TO BE REMOVED

## NOTES

1. CONTRACTOR IS RESPONSIBLE FOR RELOCATION OF ANY SIGNS AND COORDINATION WITH THE CITY ON ANY NECESSARY MODIFICATIONS.
2. CONTRACTOR IS RESPONSIBLE FOR LOCATING ALL IRRIGATION FACILITIES WITHIN LOC.
3. THE EXISTENCE AND LOCATIONS OF ALL UNDERGROUND UTILITIES SHOWN ON THE DRAWINGS WERE OBTAINED FROM AVAILABLE RECORDS AND ARE APPROXIMATE. NEITHER THE OWNER NOR THE ENGINEER ASSUMES ANY RESPONSIBILITY FOR UTILITIES NOT SHOWN OR NOT IN THE LOCATION SHOWN. THE CONTRACTOR SHALL DETERMINE THE DEPTH AND LOCATION OF EXISTING UNDERGROUND UTILITIES PRIOR TO EXCAVATION AND SHALL BE REQUIRED TO TAKE ANY PRECAUTIONARY MEASURES TO PROTECT ALL LINES SHOWN AND/ OR ANY OTHER UNDERGROUND UTILITIES NOT OF RECORD OR NOT SHOWN ON THE PLANS. CONTRACTOR SHALL BE RESPONSIBLE FOR CONTACTING ALL FRANCHISE AND CITY UTILITIES PRIOR TO CONSTRUCTION.
4. ELEV ARE TOP OF PAVEMENT UNLESS OTHERWISE NOTED.

| | |
|---|---|
| EX | EXISTING |
| PROP | PROPOSED |
| STA | STATION |
| EL | ELEVATION |
| PI | POINT OF HORIZONTAL INFLECTION |
| PC | POINT OF HORIZONTAL CURVATURE |
| PT | POINT OF HORIZONTAL TANGENCY |
| PRC | POINT OF HORIZONTAL REVERSE CURVATURE |
| PVI | POINT OF VERTICAL INFLECTION |
| AD | ALGEBRAIC DIFFERENCE IN GRADES |
| VC | VERTICAL CURVE |
| BVCS/ EVCS | BEGIN/END VERTICAL CURVE STATION |
| BVCE/ EVCE | BEGIN/END VERTICAL CURVE ELEVATION |
| PGL | PROPOSED GRADE LINE |
| TCE | TEMPORARY CONSTRUCTION EASEMENT |
| TP | TOP OF PAVEMENT |

Know what's **below.**
**Call** before you dig.

| No. | REVISIONS | DATE | BY |
|---|---|---|---|
| | | | |

PROJECT NO. 2021-01C/ BID NO. 21-69

Kimley»Horn
2201 WEST ROYAL LANE, SUITE 275, IRVING, TX 75063
PHONE: 214-420-5600
WWW.KIMLEY-HORN.COM
© 2021 KIMLEY-HORN AND ASSOCIATES, INC.
TEXAS REGISTERED ENGINEERING FIRM #F-928

9/10/2021
STATE OF TEXAS
RYAN DELMOTTE
114242
LICENSED
PROFESSIONAL ENGINEER

KHA PROJECT 063543031
DATE 09/10/2021
SCALE AS SHOWN
DESIGNED BY RMD
DRAWN BY CDS
CHECKED BY LNA

**TOWN OF ADDISON**
ALPHA ROAD CONN.
FROM FARMERS BRANCH CREEK TO ALPHA ROAD

# BELLA LANE EXTENSION
## PLAN AND PROFILE
STA 12+00 TO END

SHEET NUMBER
C3.08

Plotted By: Strahan, Cody September 08, 2021 09:00:58pm K:\IAC_Civil\063543031_Addison Alpha Road Connector\CAD\ViewSheet\Design Plan&Profile.dwg
This document, together with the concepts and designs presented herein, as an instrument of service, is intended only for the specific purpose and client for which it was prepared. Reuse of and improper reliance on this document without written authorization and adaptation by Kimley-Horn and Associates, Inc. shall be without liability to Kimley-Horn and Associates, Inc.

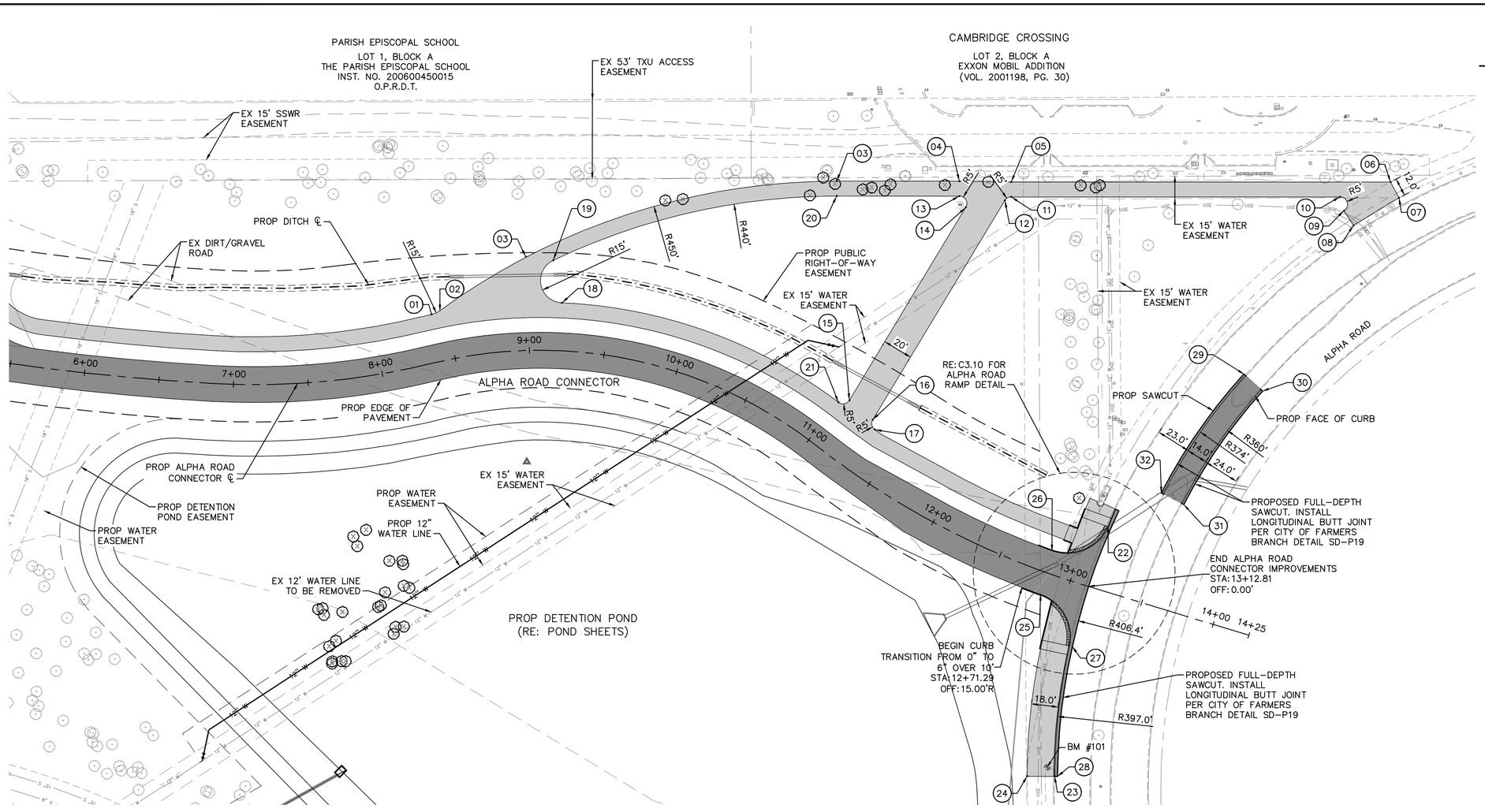


GRAPHIC SCALE IN FEET
0 20 40 80

NORTH

## LEGEND

- EX ROW
- EX EASEMENT
- PROP EASEMENT
- PROP STORM DRAIN
- PROP DITCH ℄
- PROP PAVEMENT
- PROP SIDEWALK
- PROP ASPHALT
- EX TREE
- EX TREE TO BE REMOVED

## NOTES

1. CONTRACTOR IS RESPONSIBLE FOR RELOCATION OF ANY SIGNS AND COORDINATION WITH THE CITY ON ANY NECESSARY MODIFICATIONS.
2. CONTRACTOR IS RESPONSIBLE FOR LOCATING ALL IRRIGATION FACILITIES WITHIN LOC.
3. THE EXISTENCE AND LOCATIONS OF ALL UNDERGROUND UTILITIES SHOWN ON THE DRAWINGS WERE OBTAINED FROM AVAILABLE RECORDS AND ARE APPROXIMATE. NEITHER THE OWNER NOR THE ENGINEER ASSUMES ANY RESPONSIBILITY FOR UTILITIES NOT SHOWN OR NOT IN THE LOCATION SHOWN. THE CONTRACTOR SHALL DETERMINE THE DEPTH AND LOCATION OF EXISTING UNDERGROUND UTILITIES PRIOR TO EXCAVATION AND SHALL BE REQUIRED TO TAKE ANY PRECAUTIONARY MEASURES TO PROTECT ALL LINES SHOWN AND/ OR ANY OTHER UNDERGROUND UTILITIES NOT OF RECORD OR NOT SHOWN ON THE PLANS. CONTRACTOR SHALL BE RESPONSIBLE FOR CONTACTING ALL FRANCHISE AND CITY UTILITIES PRIOR TO CONSTRUCTION.
4. ELEV ARE TOP OF PAVEMENT UNLESS OTHERWISE NOTED.

| | |
|---|---|
| EX | EXISTING |
| PROP | PROPOSED |
| STA | STATION |
| EL | ELEVATION |
| PI | POINT OF HORIZONTAL INFLECTION |
| PC | POINT OF HORIZONTAL CURVATURE |
| PT | POINT OF HORIZONTAL TANGENCY |
| PRC | POINT OF HORIZONTAL REVERSE CURVATURE |
| PVI | POINT OF VERTICAL INFLECTION |
| AD | ALGEBRAIC DIFFERENCE IN GRADES |
| VC | VERTICAL CURVE |
| BVCS/ EVCS | BEGIN/END VERTICAL CURVE STATION |
| BVCE/ EVCE | BEGIN/END VERTICAL CURVE ELEVATION |
| PGL | PROPOSED GRADE LINE |
| TCE | TEMPORARY CONSTRUCTION EASEMENT |
| TP | TOP OF PAVEMENT |

| POINT NO. | DESCRIPTION | ALIGNMENT | STATION | OFFSET | ELEV |
|---|---|---|---|---|---|
| 01 | PRC | ALPHA ROAD CONN | 8+40.94 | 32.00' L | 568.29' |
| 02 | PRC | ALPHA ROAD CONN | 8+46.33 | 33.30' L | 568.21' |
| 03 | PT | ALPHA ROAD CONN | 10+41.41 | 158.51' L | 569.20' |
| 04 | PI | ALPHA ROAD CONN | 10+86.01 | 199.59' L | 571.20' |
| 05 | PI | ALPHA ROAD CONN | 11+02.77 | 219.46' L | 571.30' |
| 06 | PI | ALPHA ROAD CONN | -- | -- | 576.17' |
| 07 | TIE TO EX | ALPHA ROAD CONN | -- | -- | 576.31' |
| 08 | TIE TO EX | ALPHA ROAD CONN | 14+12.10 | 282.92' L | 576.24' |
| 09 | PC | ALPHA ROAD CONN | 14+03.07 | 290.55' L | 576.12' |
| 10 | PT | ALPHA ROAD CONN | 13+97.78 | 298.55' L | 575.68' |
| 11 | PC | ALPHA ROAD CONN | 11+06.33 | 211.55' L | 571.11' |
| 12 | PT | ALPHA ROAD CONN | 11+05.22 | 207.01' L | 571.00' |
| 13 | PC | ALPHA ROAD CONN | 10+89.44 | 191.35' L | 570.95' |
| 14 | PT | ALPHA ROAD CONN | 10+94.27 | 187.64' L | 570.85' |
| 15 | PC | ALPHA ROAD CONN | 11+05.24 | 37.55' L | 569.90' |
| 16 | PC | ALPHA ROAD CONN | 11+26.67 | 36.60' L | 570.62' |
| 17 | PC | ALPHA ROAD CONN | 11+32.01 | 32.00' L | 570.96' |
| 18 | PC | ALPHA ROAD CONN | 9+20.23 | 32.00' L | 567.49' |
| 19 | PCC | ALPHA ROAD CONN | 9+14.35 | 60.30' L | 565.89' |
| 20 | PT | ALPHA ROAD CONN | 10+44.30 | 149.52' L | 569.00' |

| POINT NO. | DESCRIPTION | ALIGNMENT | STATION | OFFSET | ELEV |
|---|---|---|---|---|---|
| 21 | PRC | ALPHA ROAD CONN | 11+00.82 | 32.00' L | 569.87' |
| 22 | PT | ALPHA ROAD CONN | 13+13.70 | 42.13' L | 574.52' |
| 23 | TIE TO EX | ALPHA ROAD CONN | 13+28.08 | 128.20' R | 573.69' |
| 24 | TIE TO EX | ALPHA ROAD CONN | 13+10.50 | 133.45' R | 574.29' |
| 25 | PI | ALPHA ROAD CONN | 12+84.35 | 15.00' R | 574.34' |
| 26 | PT | ALPHA ROAD CONN | 12+81.60 | 15.00' L | 574.92' |
| 27 | PCC-SC | ALPHA ROAD CONN | 13+14.18 | 41.69' R | 574.12' |
| 28 | TIE TO EX | ALPHA ROAD CONN | 13+30.01 | 127.68' R | 573.66' |

| POINT NO. | DESCRIPTION | ALIGNMENT | STATION | OFFSET |
|---|---|---|---|---|
| 29 | PI-ME | ALPHA ROAD CONN | 13+70.76 | 166.39' L |
| 30 | PI-ME | ALPHA ROAD CONN | 13+86.14 | 159.15' L |
| 31 | PI-ME | ALPHA ROAD CONN | 13+57.85 | 71.06' L |
| 32 | PI-ME | ALPHA ROAD CONN | 13+41.13 | 74.13' L |

Know what's **below.**
**Call** before you dig.

| No. | REVISIONS | DATE | BY |
|---|---|---|---|
| | | | |

PROJECT NO. 2021-01C/ BID NO. 21-69

Kimley»Horn
2201 WEST ROYAL LANE, SUITE 275, IRVING, TX 75063
PHONE: 214-420-5600
WWW.KIMLEY-HORN.COM
© 2021 KIMLEY-HORN AND ASSOCIATES, INC.
TEXAS REGISTERED ENGINEERING FIRM #F-928

9/10/2021
STATE OF TEXAS
RYAN DELMOTTE
114242
LICENSED PROFESSIONAL ENGINEER

| KHA PROJECT 063543031 | | | |
|---|---|---|---|
| DATE 09/10/2021 | SCALE | AS SHOWN | |
| | DESIGNED BY | RMD | |
| | DRAWN BY | CDS | |
| | CHECKED BY | LNA | |

**TOWN OF ADDISON**
ALPHA ROAD CONN.
FROM FARMERS BRANCH
CREEK TO ALPHA ROAD

PAVING
PAVING AND
SIDEWALK LAYOUT

SHEET NUMBER
C3.09

Plotted By: Shettigh, Cody Sep 08, 2021 - 09:01:06pm K:\IAC_Civil\063543031_Addison_Alpha_Bryan_Connector\CADD\PrintSheet\Paving_PlanAndProfile.dwg
This document, together with the concepts and designs presented herein, as an instrument of service, is intended only for the specific purpose and client for which it was prepared. Reuse of and improper reliance on this document without written authorization and adaptation by Kimley-Horn and Associates, Inc. shall be without liability to Kimley-Horn and Associates, Inc.

Plotted By: Shattuck, Cody September 08, 2021 09:01:17am K:\AC_Civil\063543031_Addison-Alpha Road Connector\0400\Plan Sheets\Paving Plan&Profile.dgn
This document, together with the concepts and designs presented herein, as an instrument of service, is intended only for the specific purpose and client for which it was prepared. Reuse of and improper reliance on this document without written authorization and adaptation by Kimley-Horn and Associates, Inc. shall be without liability to Kimley-Horn and Associates, Inc.

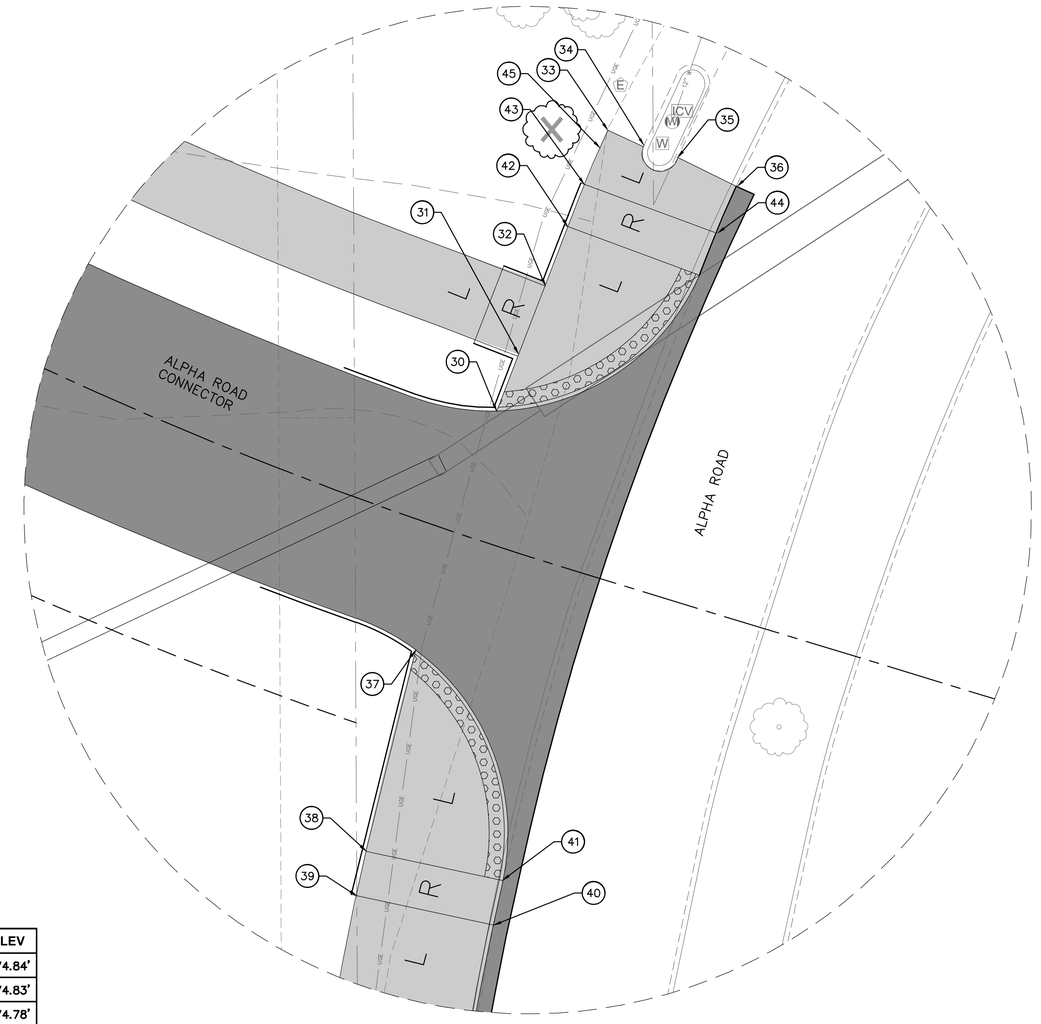


| POINT NO. | DESCRIPTION | ALIGNMENT | STATION | OFFSET | ELEV |
|---|---|---|---|---|---|
| 30 | SW | ALPHA ROAD CONN | 12+92.83 | 16.93' L | 574.84' |
| 31 | SW | ALPHA ROAD CONN | 12+93.16 | 25.00' L | 574.83' |
| 32 | SW | ALPHA ROAD CONN | 12+93.68 | 34.64' L | 574.78' |
| 33 | SW–ME | ALPHA ROAD CONN | 12+95.08 | 56.73' L | 574.70' |
| 34 | SW–ME | ALPHA ROAD CONN | 13+00.83 | 56.31' L | 574.83' |
| 35 | SW–ME | ALPHA ROAD CONN | 13+06.12 | 56.15' L | 574.96' |
| 36 | PI–ME | ALPHA ROAD CONN | 13+15.10 | 54.80' L | 574.59' |
| 37 | SW | ALPHA ROAD CONN | 12+92.81 | 16.36' R | 574.32' |
| 38 | SW | ALPHA ROAD CONN | 12+94.97 | 43.59' R | 574.24' |
| 39 | SW | ALPHA ROAD CONN | 12+95.57 | 49.57' R | 574.69' |
| 40 | PI–TP | ALPHA ROAD CONN | 13+12.74 | 47.81' R | 574.11' |
| 41 | PI–TP | ALPHA ROAD CONN | 13+12.12 | 41.84' R | 574.14' |
| 42 | SW | ALPHA ROAD CONN | 12+94.01 | 42.99' L | 574.74' |
| 43 | SW | ALPHA ROAD CONN | 12+94.37 | 48.96' L | 574.82' |
| 44 | PI–TP | ALPHA ROAD CONN | 13+14.42 | 48.16' L | 574.56' |
| 45 | SW | ALPHA ROAD CONN | 12+94.83 | 54.18' L | 574.77' |

NORTH

GRAPHIC SCALE IN FEET
0 ## ## ##

## LEGEND

- EX ROW
- EX EASEMENT
- PROP EASEMENT
- PROP STORM DRAIN
- PROP DITCH ℄
- PROP PAVEMENT
- PROP SIDEWALK
- PROP ASPHALT
- EX TREE
- EX TREE TO BE REMOVED

## NOTES

1. CONTRACTOR IS RESPONSIBLE FOR RELOCATION OF ANY SIGNS AND COORDINATION WITH THE CITY ON ANY NECESSARY MODIFICATIONS.
2. CONTRACTOR IS RESPONSIBLE FOR LOCATING ALL IRRIGATION FACILITIES WITHIN LOC.
3. THE EXISTENCE AND LOCATIONS OF ALL UNDERGROUND UTILITIES SHOWN ON THE DRAWINGS WERE OBTAINED FROM AVAILABLE RECORDS AND ARE APPROXIMATE. NEITHER THE OWNER NOR THE ENGINEER ASSUMES ANY RESPONSIBILITY FOR UTILITIES NOT SHOWN OR NOT IN THE LOCATION SHOWN. THE CONTRACTOR SHALL DETERMINE THE DEPTH AND LOCATION OF EXISTING UNDERGROUND UTILITIES PRIOR TO EXCAVATION AND SHALL BE REQUIRED TO TAKE ANY PRECAUTIONARY MEASURES TO PROTECT ALL LINES SHOWN AND/ OR ANY OTHER UNDERGROUND UTILITIES NOT OF RECORD OR NOT SHOWN ON THE PLANS. CONTRACTOR SHALL BE RESPONSIBLE FOR CONTACTING ALL FRANCHISE AND CITY UTILITIES PRIOR TO CONSTRUCTION.
4. ELEV ARE TOP OF PAVEMENT UNLESS OTHERWISE NOTED.

| | |
|---|---|
| EX | EXISTING |
| PROP | PROPOSED |
| STA | STATION |
| EL | ELEVATION |
| PI | POINT OF HORIZONTAL INFLECTION |
| PC | POINT OF HORIZONTAL CURVATURE |
| PT | POINT OF HORIZONTAL TANGENCY |
| PRC | POINT OF HORIZONTAL REVERSE CURVATURE |
| PVI | POINT OF VERTICAL INFLECTION |
| AD | ALGEBRAIC DIFFERENCE IN GRADES |
| VC | VERTICAL CURVE |
| BVCS/ EVCS | BEGIN/END VERTICAL CURVE STATION |
| BVCE/ EVCE | BEGIN/END VERTICAL CURVE ELEVATION |
| PGL | PROPOSED GRADE LINE |
| TCE | TEMPORARY CONSTRUCTION EASEMENT |
| TP | TOP OF PAVEMENT |

Know what's **below.**
**Call** before you dig.

| No. | REVISIONS | DATE | BY |
|---|---|---|---|
| | | | |

PROJECT NO. 2021-01C/ BID NO. 21-69

Kimley»Horn
2201 WEST ROYAL LANE, SUITE 275, IRVING, TX 75063
PHONE: 214-420-5600
WWW.KIMLEY-HORN.COM
© 2021 KIMLEY-HORN AND ASSOCIATES, INC.
TEXAS REGISTERED ENGINEERING FIRM #F-928

9/10/2021

STATE OF TEXAS
RYAN DELMOTTE
114242
LICENSED
PROFESSIONAL ENGINEER

KHA PROJECT 063543031
DATE 09/10/2021
SCALE AS SHOWN
DESIGNED BY RMD
DRAWN BY CDS
CHECKED BY LNA

# TOWN OF ADDISON
## ALPHA ROAD CONN. FROM FARMERS BRANCH CREEK TO ALPHA ROAD

## PAVING RAMP GRADING

SHEET NUMBER
C3.10

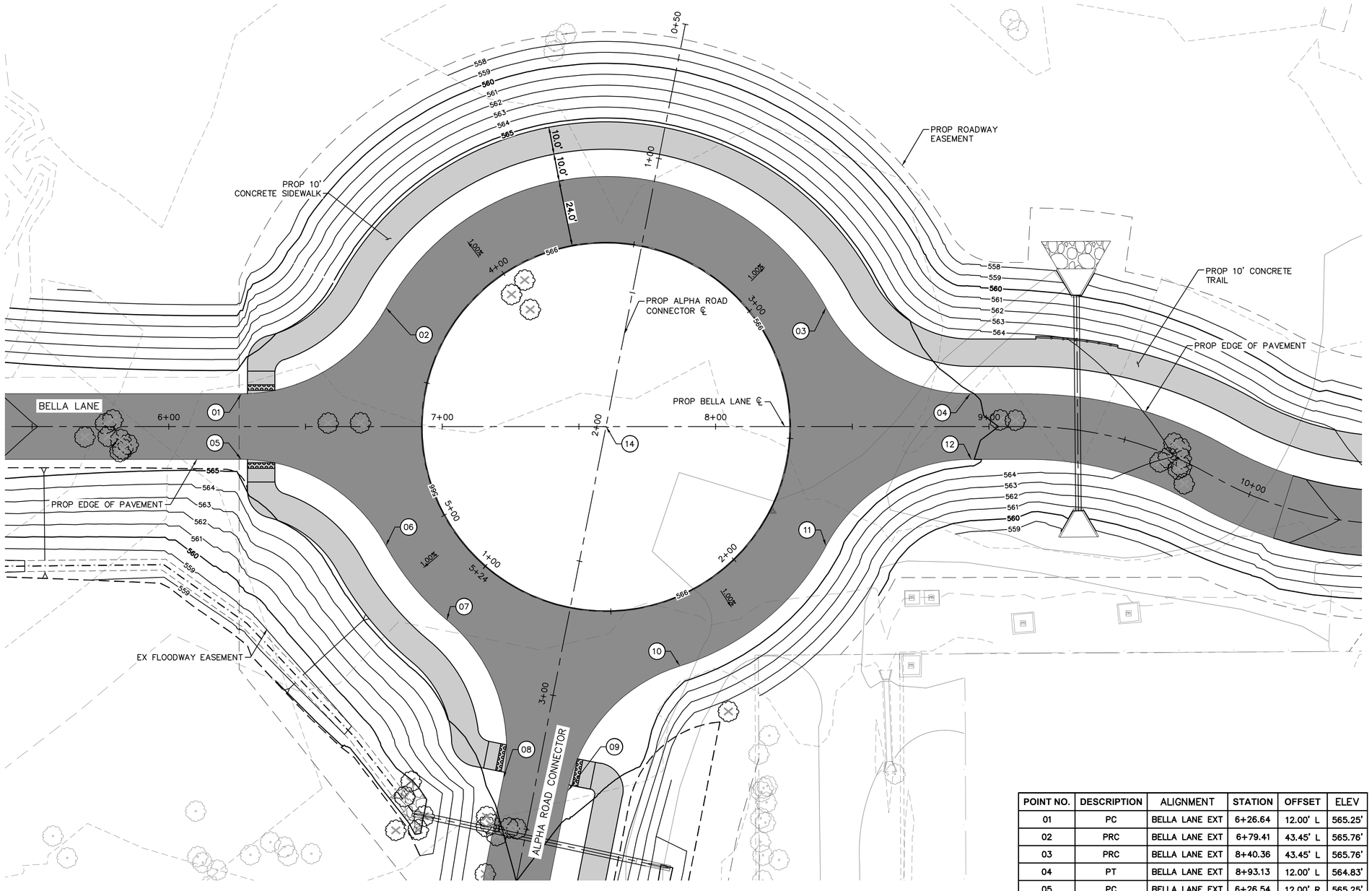


GRAPHIC SCALE IN FEET
0 10 20 40

NORTH

## LEGEND

- EX ROW
- EX EASEMENT
- PROP EASEMENT
- PROP STORM DRAIN
- PROP DITCH ℄
- PROP PAVEMENT
- PROP SIDEWALK
- PROP ASPHALT
- EX TREE
- EX TREE TO BE REMOVED

## NOTES

1. CONTRACTOR IS RESPONSIBLE FOR RELOCATION OF ANY SIGNS AND COORDINATION WITH THE CITY ON ANY NECESSARY MODIFICATIONS.
2. CONTRACTOR IS RESPONSIBLE FOR LOCATING ALL IRRIGATION FACILITIES WITHIN LOC.
3. THE EXISTENCE AND LOCATIONS OF ALL UNDERGROUND UTILITIES SHOWN ON THE DRAWINGS WERE OBTAINED FROM AVAILABLE RECORDS AND ARE APPROXIMATE. NEITHER THE OWNER NOR THE ENGINEER ASSUMES ANY RESPONSIBILITY FOR UTILITIES NOT SHOWN OR NOT IN THE LOCATION SHOWN. THE CONTRACTOR SHALL DETERMINE THE DEPTH AND LOCATION OF EXISTING UNDERGROUND UTILITIES PRIOR TO EXCAVATION AND SHALL BE REQUIRED TO TAKE ANY PRECAUTIONARY MEASURES TO PROTECT ALL LINES SHOWN AND/ OR ANY OTHER UNDERGROUND UTILITIES NOT OF RECORD OR NOT SHOWN ON THE PLANS. CONTRACTOR SHALL BE RESPONSIBLE FOR CONTACTING ALL FRANCHISE AND CITY UTILITIES PRIOR TO CONSTRUCTION.
4. ELEV ARE TOP OF PAVEMENT UNLESS OTHERWISE NOTED.

| | |
|---|---|
| EX | EXISTING |
| PROP | PROPOSED |
| STA | STATION |
| EL | ELEVATION |
| PI | POINT OF HORIZONTAL INFLECTION |
| PC | POINT OF HORIZONTAL CURVATURE |
| PT | POINT OF HORIZONTAL TANGENCY |
| PRC | POINT OF HORIZONTAL REVERSE CURVATURE |
| PVI | POINT OF VERTICAL INFLECTION |
| AD | ALGEBRAIC DIFFERENCE IN GRADES |
| VC | VERTICAL CURVE |
| BVCS/ EVCS | BEGIN/END VERTICAL CURVE STATION |
| BVCE/ EVCE | BEGIN/END VERTICAL CURVE ELEVATION |
| PGL | PROPOSED GRADE LINE |
| TCE | TEMPORARY CONSTRUCTION EASEMENT |
| TP | TOP OF PAVEMENT |

| POINT NO. | DESCRIPTION | ALIGNMENT | STATION | OFFSET | ELEV |
|---|---|---|---|---|---|
| 01 | PC | BELLA LANE EXT | 6+26.64 | 12.00' L | 565.25' |
| 02 | PRC | BELLA LANE EXT | 6+79.41 | 43.45' L | 565.76' |
| 03 | PRC | BELLA LANE EXT | 8+40.36 | 43.45' L | 565.76' |
| 04 | PT | BELLA LANE EXT | 8+93.13 | 12.00' L | 564.83' |
| 05 | PC | BELLA LANE EXT | 6+26.54 | 12.00' R | 565.25' |
| 06 | PRC | BELLA LANE EXT | 6+79.35 | 43.52' R | 565.76' |
| 07 | PRC | BELLA LANE EXT | 7+01.64 | 70.66' R | 565.76' |
| 08 | PT | BELLA LANE EXT | 7+22.31 | 128.55' R | 565.15' |
| 09 | PC | BELLA LANE EXT | 7+45.86 | 133.19' R | 565.21' |
| 10 | PRC | BELLA LANE EXT | 7+86.97 | 87.49' R | 565.76' |
| 11 | PRC | BELLA LANE EXT | 8+40.42 | 43.52' R | 565.76' |
| 12 | PT | BELLA LANE EXT | 8+93.60 | 12.00' R | 564.97' |
| 14 | PI | BELLA LANE EXT | 7+59.90 | 0.00' | 566.71' |

Know what's **below.**
**Call** before you dig.

| No. | REVISIONS | DATE | BY |
|---|---|---|---|
| | | | |

PROJECT NO. 2021-01C/ BID NO. 21-69


Kimley»Horn
2201 WEST ROYAL LANE, SUITE 275, IRVING, TX 75063
PHONE: 214-420-5600
WWW.KIMLEY-HORN.COM


© 2021 KIMLEY-HORN AND ASSOCIATES, INC.
TEXAS REGISTERED ENGINEERING FIRM #F-928


9/10/2021
STATE OF TEXAS
RYAN DELMOTTE
114242
LICENSED
PROFESSIONAL ENGINEER

| | |
|---|---|
| KHA PROJECT | 063543031 |
| DATE | 09/10/2021 |
| SCALE | AS SHOWN |
| DESIGNED BY | RMD |
| DRAWN BY | CDS |
| CHECKED BY | LNA |

# TOWN OF ADDISON
## ALPHA ROAD CONN. FROM FARMERS BRANCH CREEK TO ALPHA ROAD

## PAVING
## TRAFFIC CIRCLE
## GRADING PLAN

SHEET NUMBER
C3.11


Plotted By: Shyndahl, Cody Sep 14, 2021 - 09:01:48am K:\IAC Civil\063543031_Addison-Alpha Road Connector\CAD\Plan Sheets\Traffic Circle Layout.dwg
This document, together with the concepts and designs presented herein, as an instrument of service is intended only for the specific purpose and client for which it was prepared. Reuse of and improper reliance on this document without written authorization and adaptation by Kimley-Horn and Associates, Inc. shall be without liability to Kimley-Horn and Associates, Inc.

DISCLAIMER:
The use of this standard is governed by the "Texas Engineering Practice Act". No warranty of any kind is made by TxDOT for any purpose whatsoever. TxDOT assumes no responsibility for the conversion of this standard to other formats or for incorrect results or damages resulting from its use.

DATE:
FILE:

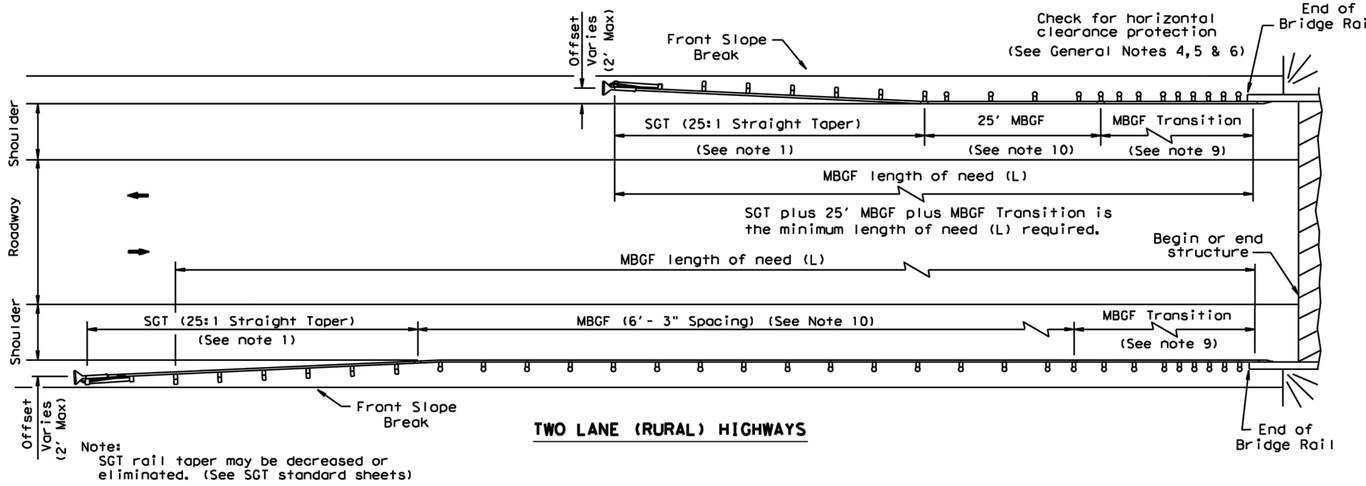


Note:
SGT rail taper may be decreased or eliminated. (See SGT standard sheets)

## TWO LANE (RURAL) HIGHWAYS

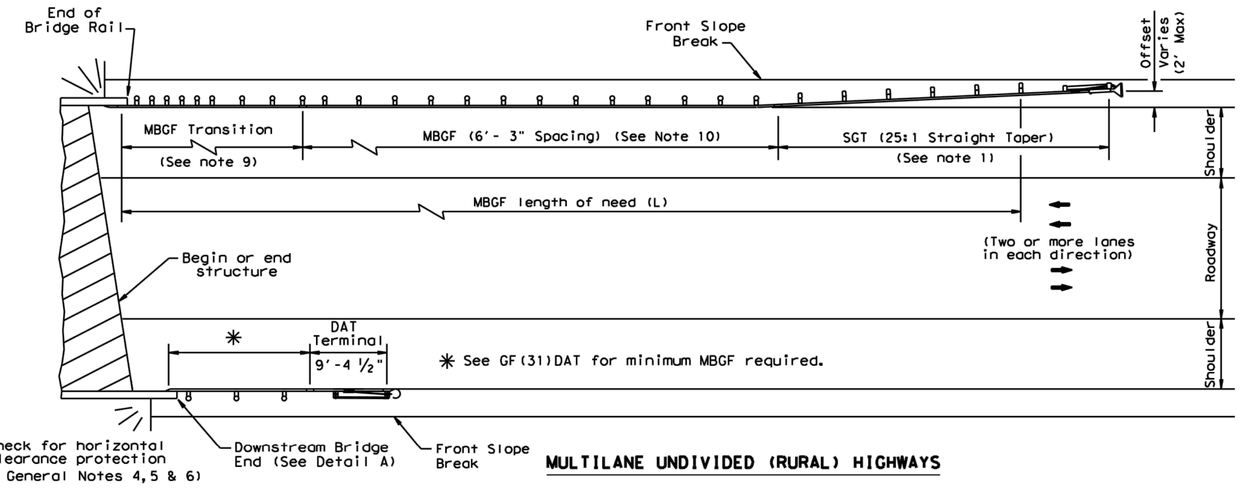


## MULTILANE UNDIVIDED (RURAL) HIGHWAYS

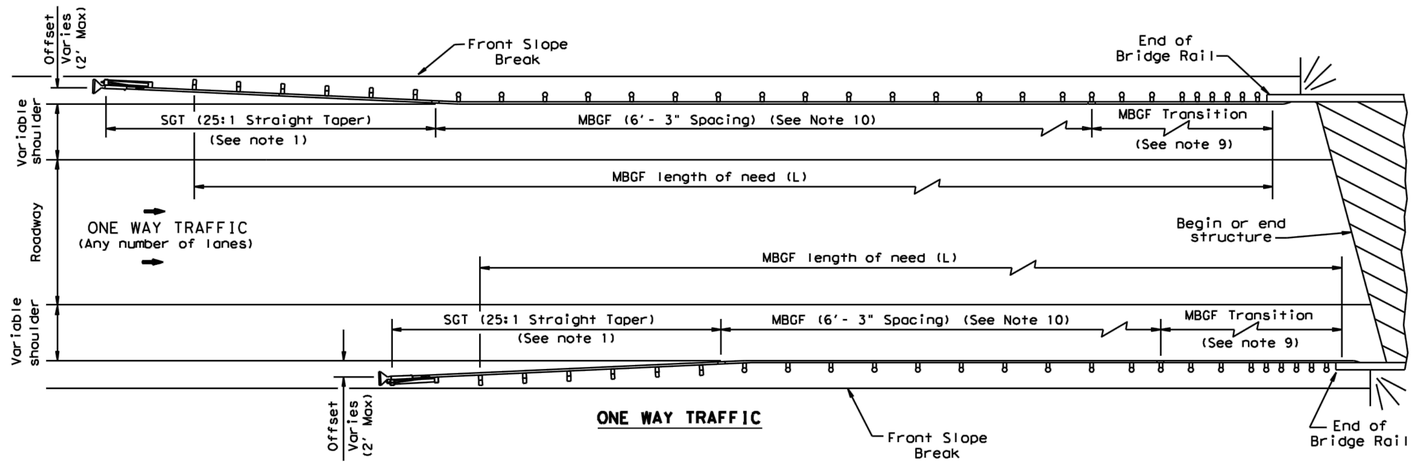


## ONE WAY TRAFFIC

## GENERAL NOTES

1. For more detail: See GF(31), SGT( )31, GF(31)TR, and GF(31)TL2 standard sheets.
2. Quantities of metal beam guard fence (MBGF) at individual bridge ends are as shown in the plans.
3. Use average daily traffic (ADT) for the current year to determine MBGF length of need in accordance with the Roadway Design Manual unless otherwise specified. Where significant traffic volume growth is anticipated on low volume (0-750 ADT) highways, use length determinations for the higher volume category.
4. MBGF may not be required to shield departure end of bridge unless other obstacles within the horizontal clearance limits or opposing traffic indicate a MBGF consideration.
5. Downstream anchor terminals (DAT) are only for downstream end anchorage use, outside the horizontal clearance area of opposing traffic.
6. Direct connection of MBGF to concrete rails are only for downstream rail connections outside the horizontal clearance area of opposing traffic. (This requires a minimum of three standard line posts plus the DAT terminal, See Detail A)
7. The crown shall be widened to accommodate MBGF. Typically the "front slope" break should be 2'- 0" from the back of the MBGF post. This applies to new construction on new alignment or where existing roadway cross section is to be widened to increase roadway width. This does not apply to rehabilitation work where existing roadway crown width is to be retained (See Typical Cross Section at MBGF).
8. For restrictive bridge widths: The MBGF should be properly transitioned from the existing bridge rail to the adjoining MBGF (See MBGF Transition Standards). Metal beam guard fence at these bridge location(s) shall be flared at the rate of 25:1 or flatter, and be of the length necessary to locate the terminal end at the 2 ft."maximum" offset from the shoulder edge in the approach direction.
9. Transition length and post spacing will vary depending on the transition type. Transition type will be shown elsewhere in the plans.
10. A minimum 25' length of MBGF will be required.

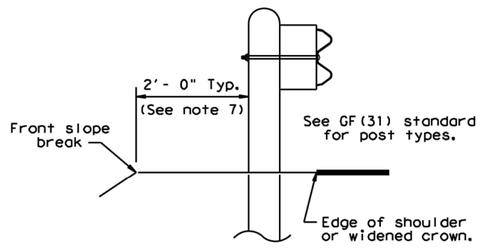


## TYPICAL CROSS SECTION AT MBGF

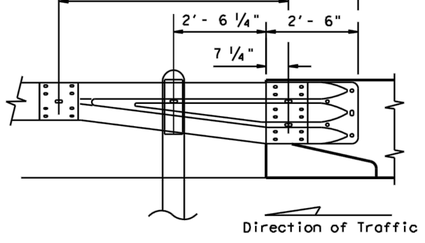


Note:
All rail elements shall be lapped in the direction of adjacent traffic.

## DETAIL A

Showing Downstream Rail Attachment

Texas Department of Transportation

Design Division Standard

# BRIDGE END DETAILS

## (METAL BEAM GUARD FENCE APPLICATIONS TO RIGID RAILS)

# BED-14

| FILE: bed14.dgn | DN: TxDOT | CK: AM | DW: BD/VP | CK: CGL |
|---|---|---|---|---|
| ©TxDOT: December 2011 | CONT | SECT | JOB | HIGHWAY |
| REVISIONS<br>REVISED APRIL 2014<br>SEE (MEMO 0414) | DIST | COUNTY | | SHEET NO. |

DISCLAIMER:
The use of this standard is governed by the "Texas Engineering Practice Act". No warranty of any kind is made by TxDOT for any purpose whatsoever. TxDOT assumes no responsibility for the conversion of this standard to other formats or for incorrect results or damages resulting from its use.

DATE:
FILE:

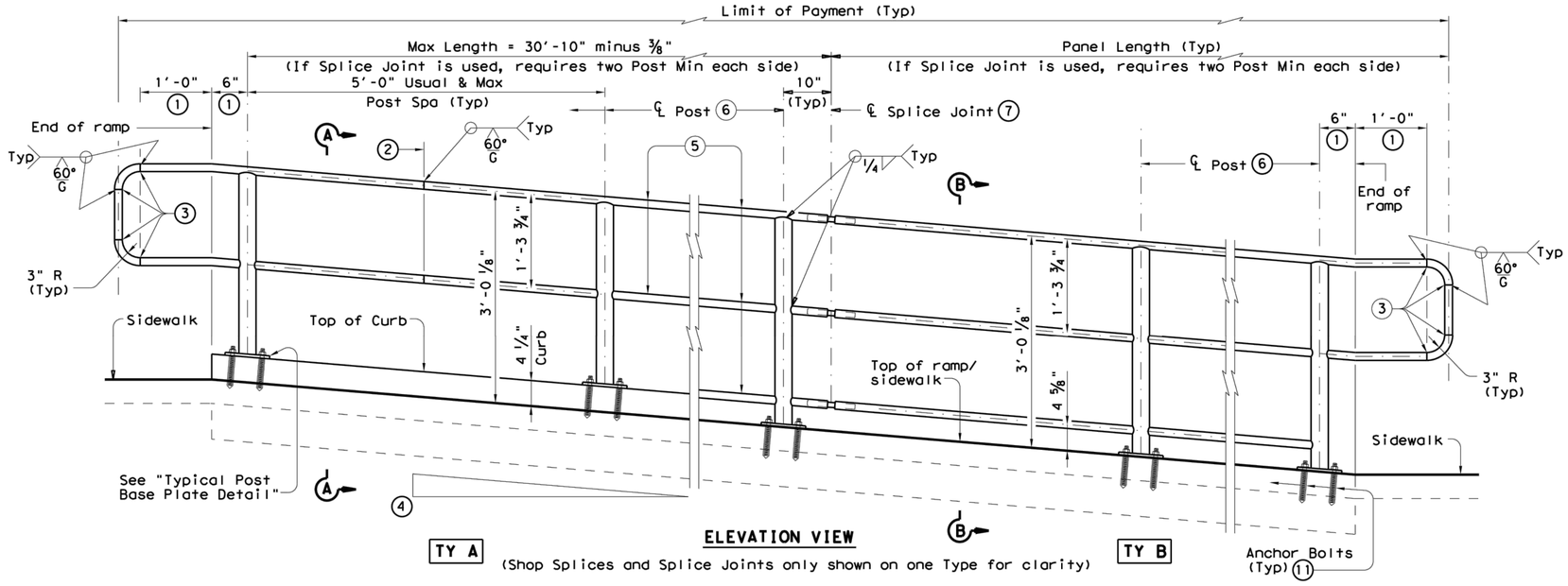


**ELEVATION VIEW**

(Shop Splices and Splice Joints only shown on one Type for clarity)

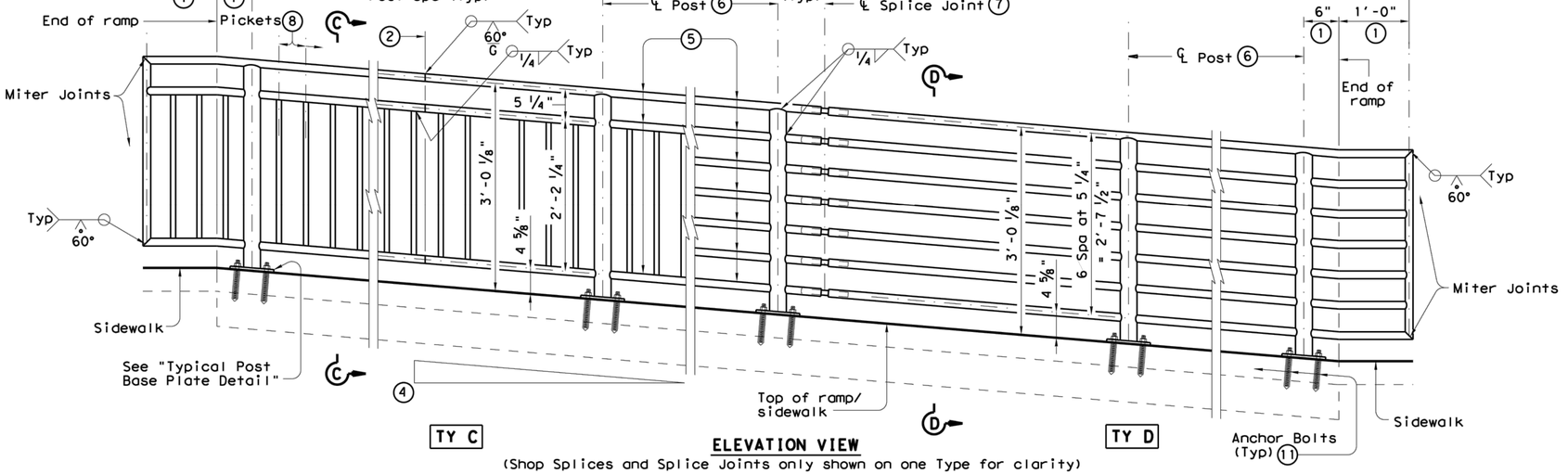


**ELEVATION VIEW**

(Shop Splices and Splice Joints only shown on one Type for clarity)

| RECOMMENDED USAGE ⑨⑩ | |
|---|---|
| Dropoff Height/ Condition | Recommended Rail Options |
| <30" dropoff | TY A, TY B, TY C, or TY D |
| ≥ 30" dropoff, or along Bike Path | TY E or TY F |

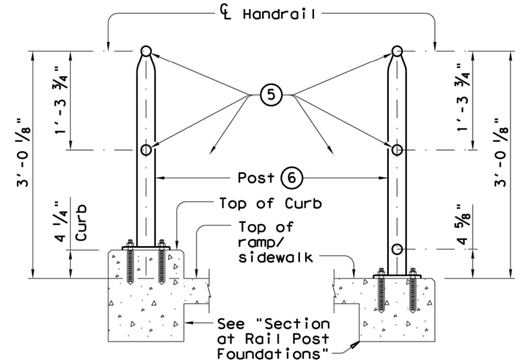


**SECTION A-A**
(Showing Handrail **TY A**)

**SECTION B-B**
(Showing Handrail **TY B**)

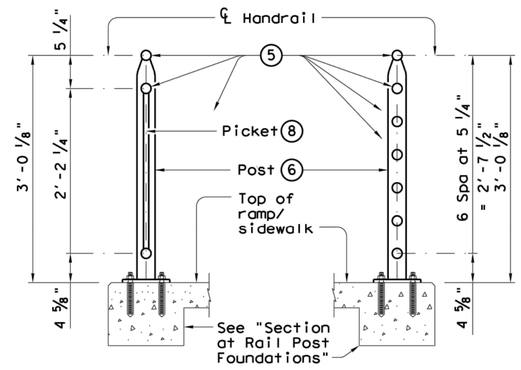


**SECTION C-C**
(Showing Handrail **TY C**)

**SECTION D-D**
(Showing Handrail **TY D**)

1. Parallel to ground.
2. One shop splice per panel is permitted with minimum 85 percent penetration. The weld may be square groove or single vee groove. Grind smooth.
3. Shop splice is permitted with minimum 85 percent penetration. The weld may be square groove or single vee groove. Grind smooth.
4. See Ramp Details located elsewhere in plans for ramp slope and dimensions. Maximum ramp slope will not exceed 8.3 percent. Level landing required for each 30" rise if grade exceeds 5 percent.
5. 1 ½" Dia. Standard Pipe (1.900" O.D., 0.145" wall thickness). Parallel to ramp / sidewalk. Provide holes as needed in 1 ½" Dia. pipe for galvanizing drainage and venting.
6. 2 ½" Dia. Standard Pipe (2.875" O.D., 0.203" wall thickness). See "Post Mount Detail" for crimping and trimming post to fit Dia. of top rail. Provide holes as needed in post for galvanizing drainage and venting. Plumb all posts.
7. See "Handrail Fabrication Details" for Splice Joints.
8. ℄ ⅝" Dia. Round Bar equal spacing at 4 ½" Max. Plumb all pickets.
9. When needed for accessibility (grade > 5 percent) or as needed for pedestrian safety.
10. Not to be used on bridges.
11. See "General Notes" for anchor bolt information.

SHEET 1 OF 3

Texas Department of Transportation

Design Division Standard

# PEDESTRIAN HANDRAIL DETAILS

# PRD-13

| FILE: prd13.dgn | DN: TxDOT | CK: AM | DW: JTR | CK: CGL |
|---|---|---|---|---|
| ©TxDOT December 2006 | CONT | SECT | JOB | HIGHWAY |
| REVISIONS | | | | |
| REVISED MAY, 2013 (VP) | DIST | COUNTY | | SHEET NO. |

DISCLAIMER:
The use of this standard is governed by the "Texas Engineering Practice Act". No warranty of any kind is made by TxDOT for any purpose whatsoever. TxDOT assumes no responsibility for the conversion of this standard to other formats or for incorrect results or damages resulting from its use.

DATE:
FILE:

**TYPE 1**

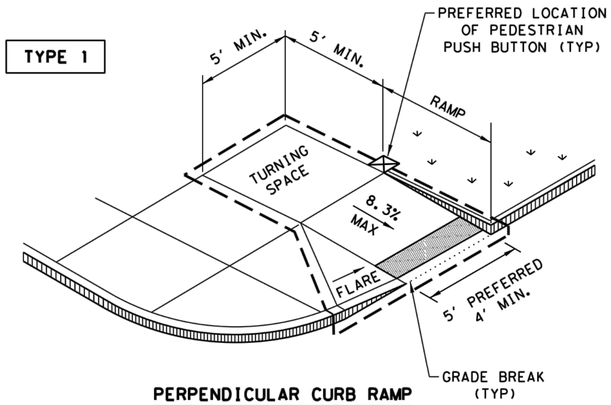


PERPENDICULAR CURB RAMP

**TYPE 2**

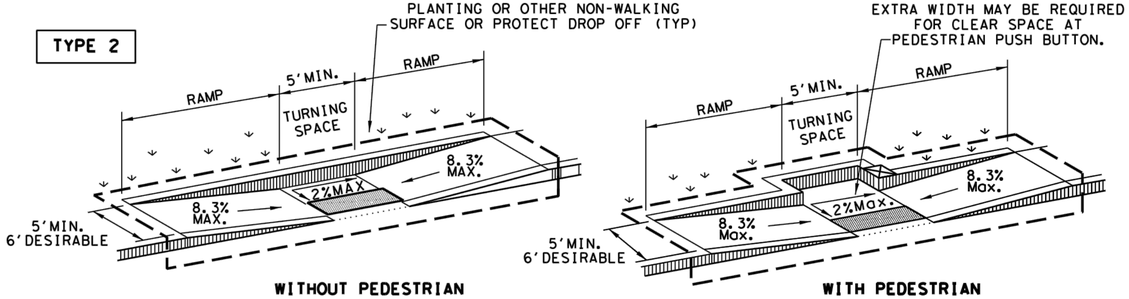


WITHOUT PEDESTRIAN PUSH BUTTON

WITH PEDESTRIAN PUSH BUTTON

PARALLEL CURB RAMP

**TYPE 3**

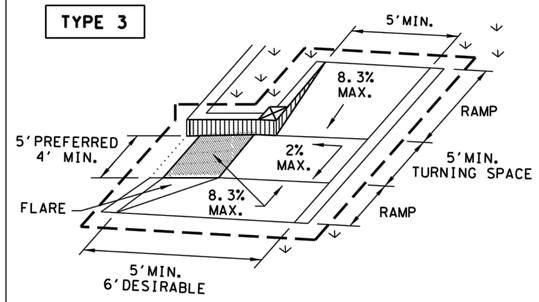


**TYPE 6**

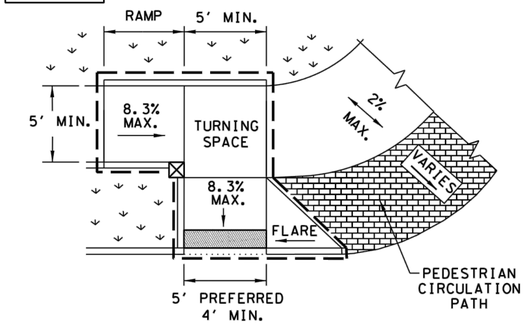


COMBINATION CURB RAMPS

**TYPE 20**

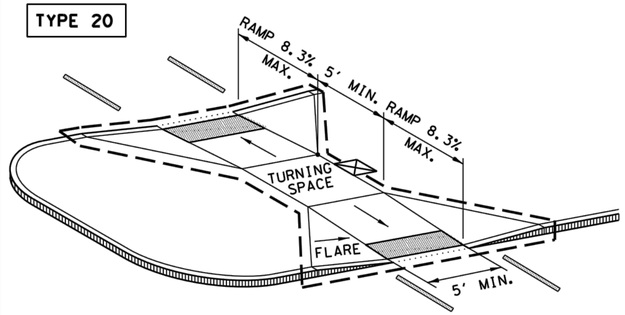


CURB RAMPS AT MEDIAN ISLANDS

**TYPE 7**
**(SIDEWALK SET BACK FROM CURB)**

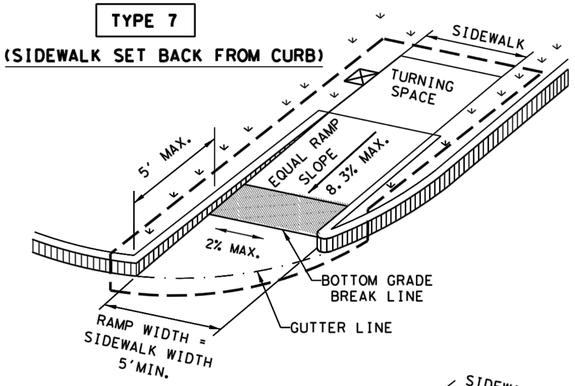


CROSS SLOPE NOT TO EXCEED 2% ON ANY PORTION OF RAMP, TURNING SPACE OR TRANSITION TO STREET.

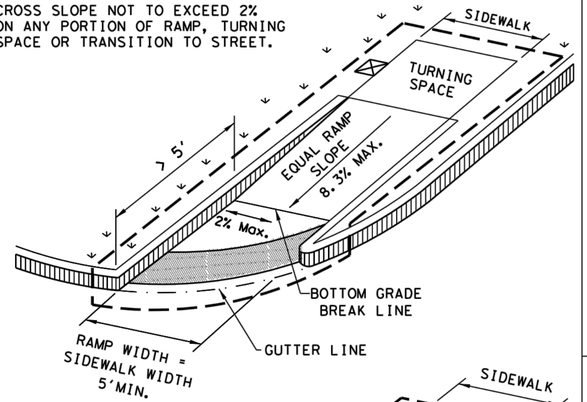


**TYPE 10**
**(SIDEWALK ADJACENT TO CURB)**

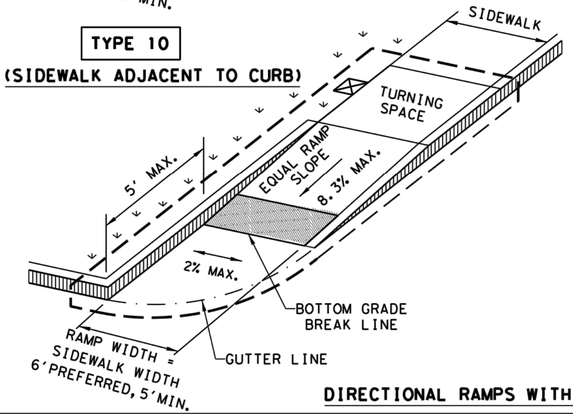


CROSS SLOPE NOT TO EXCEED 2% ON ANY PORTION OF RAMP, TURNING SPACE OR TRANSITION TO STREET.

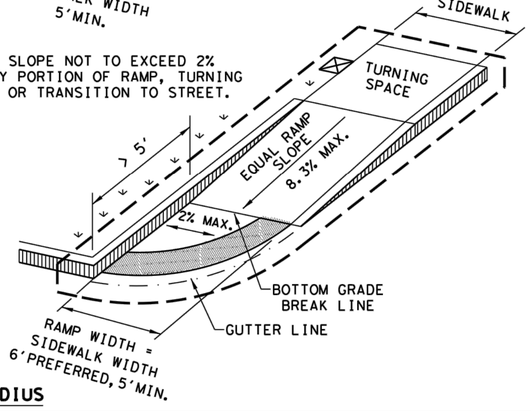


DIRECTIONAL RAMPS WITHIN RADIUS

**TYPE 5**

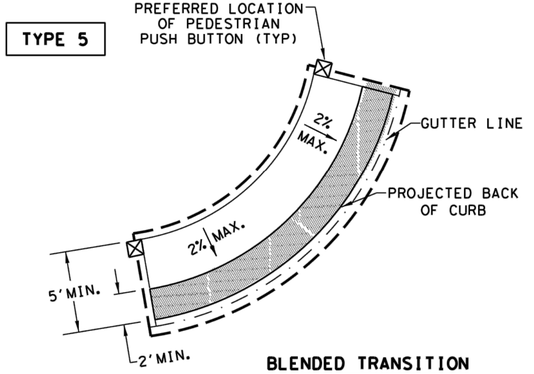


BLENDED TRANSITION
(FLUSH LANDING)

**TYPE 21**

INSTALL DETECTABLE WARNING SURFACE AT EACH END OF THE CUT-THROUGH RAMP WITH A MINIMUM 2' USUAL SIDEWALK SURFACE BETWEEN. IF MEDIAN IS LESS THAN 6' WIDE, ELIMINATE DETECTABLE WARNING SURFACES.

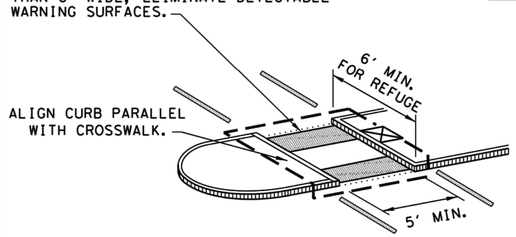


NOTE: CURB DETAILS ARE SHOWN ELSEWHERE IN THE PLANS.

**TYPE 22**

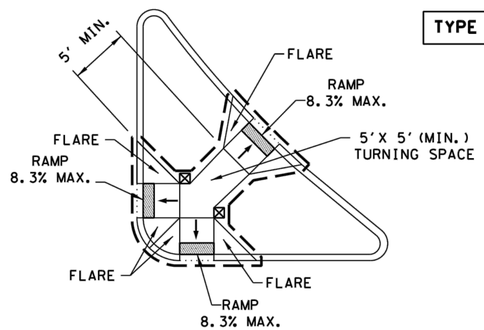


COMBINATION ISLAND RAMPS

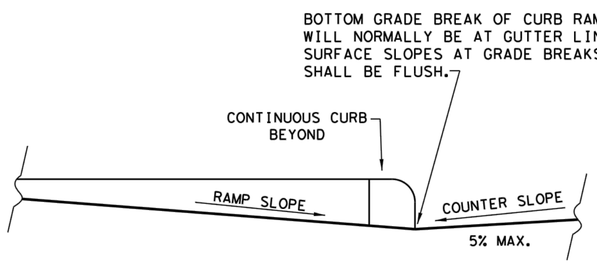


TYPICAL SECTION OF PERPENDICULAR CURB RAMP AT CONNECTION TO ROADWAY

**NOTES / LEGEND:**

SEE GENERAL NOTES ON SHEET 2 OF 4 FOR MORE INFORMATION.

DENOTES PLANTING OR NON-WALKING SURFACE NOT PART OF PEDESTRIAN CIRCULATION PATH.

DETECTABLE WARNING SURFACE

DENOTES PREFERRED LOCATION OF PEDESTRIAN PUSH BUTTON IF APPLICABLE.

GUTTER LINE

GRADE BREAK

RAMP LIMITS OF PAYMENT

SHEET 1 OF 4

Texas Department of Transportation

Design Division Standard

# PEDESTRIAN FACILITIES CURB RAMPS

# PED-18

| | | | | | |
|---|---|---|---|---|---|
| FILE: ped18 | DN: TxDOT | | DW: VP | CK: KM | CK: PK & JG |
| © TxDOT: MARCH, 2002 | CONT | SECT | JOB | | HIGHWAY |
| REVISIONS | | | | | |
| REVISED 08,2005<br>REVISED 06,2012<br>REVISED 01,2018 | DIST | COUNTY | | | SHEET NO. |
| | | | | | C3.14 |

DISCLAIMER:
The use of this standard is governed by the "Texas Engineering Practice Act". No warranty of any kind is made by TxDOT for any purpose whatsoever. TxDOT assumes no responsibility for the conversion of this standard to other formats or for incorrect results or damages resulting from its use.

DATE:
FILE:

# GENERAL NOTES

## CURB RAMPS

1. Install a curb ramp or blended transition at each pedestrian street crossing.
2. All slopes shown are maximum allowable. Cross slopes of 1.5% and lesser running should be used. Adjust curb ramp length or grade of approach sidewalks as directed.
3. Maximum allowable cross slope on sidewalk and curb ramp surfaces is 2%.
4. The minimum sidewalk width is 5'. Where the sidewalk is adjacent to the back of curb, a 6' sidewalk width is desirable. Where a 5' sidewalk cannot be provided due to site constraints, sidewalk width may be reduced to 4' for short distances. 5'x 5' passing areas at intervals not to exceed 200' are required.
5. Turning Spaces shall be 5'x 5' minimum. Cross slope shall be maximum 2%.
6. Clear space at the bottom of curb ramps shall be a minimum of 4'x 4' wholly contained within the crosswalk and wholly outside the parallel vehicular travel path.
7. Provide flared sides where the pedestrian circulation path crosses the curb ramp. Flared sides shall be sloped at 10% maximum, measured parallel to the curb. Returned curbs may be used only where pedestrians would not normally walk across the ramp, either because the adjacent surface is planted, substantially obstructed, or otherwise protected.
8. Additional information on curb ramp location, design, light reflective value and texture may be found in the latest draft of the Proposed Guidelines for Pedestrian Facilities in the Public Right of Way (PROWAG) as published by the U.S. Architectural and Transportation Barriers Compliance Board (Access Board).
9. To serve as a pedestrian refuge area, the median should be a minimum of 6' wide, measured from back of curbs. Medians should be designed to provide accessible passage over or through them.
10. Small channelization islands, which do not provide a minimum 5'x 5' landing at the top of curb ramps, shall be cut through level with the surface of the street.
11. Crosswalk dimensions, crosswalk markings and stop bar locations shall be as shown elsewhere in the plans. At intersections where crosswalk markings are not required, curb ramps shall align with theoretical crosswalks unless otherwise directed.
12. Provide curb ramps to connect the pedestrian access route at each pedestrian street crossing. Handrails are not required on curb ramps.
13. Curb ramps and landings shall be constructed and paid for in accordance with Item 531 "Sidewalks".
14. Place concrete at a minimum depth of 5" for ramps, flares and landings, unless otherwise directed.
15. Furnish and install No. 3 reinforcing steel bars at 18" o.c. both ways, unless otherwise directed.
16. Provide a smooth transition where the curb ramps connect to the street.
17. Curbs shown on sheet 1 within the limits of payment are considered part of the curb ramp for payment, whether it is concrete curb, gutter, or combined curb and gutter.
18. Existing features that comply with applicalble standards may remain in place unless otherwise shown on the plans.

## DETECTABLE WARNING MATERIAL

19. Curb ramps must contain a detectable warning surface that consists of raised truncated domes complying with PROWAG. The surface must contrast visually with adjoining surfaces, including side flares. Furnish and install an approved cast-in-place dark brown or dark red detectable warning surface material adjacent to uncolored concrete, unless specified elsewhere in the plans.
20. Detectable Warning Materials must meet TxDOT Departmental Materials Specification DMS 4350 and be listed on the Material Producer List. Install products in accordance with manufacturer's specifications.
21. Detectable warning surfaces must be firm, stable and slip resistant.
22. Detectable warning surfaces shall be a minimum of 24 inches in depth in the direction of pedestrian travel, and extend the full width of the curb ramp or landing where the pedestrian access route enters the street.
23. Detectable warning surfaces shall be located so that the edge nearest the curb line is at the back of curb and neither end of that edge is greater than 5 feet from the back of curb. Detectable warning surfaces may be curved along the corner radius.
24. Shaded areas on Sheet 1 of 4 indicate the approximate location for the detectable warning surface for each curb ramp type.

## DETECTABLE WARNING PAVERS (IF USED)

25. Furnish detectable warning paver units meeting all requirements of ASTM C-936, C-33. Lay in a two by two unit basket weave pattern or as directed.
26. Lay full-size units first followed by closure units consisting of at least 25 percent (25%) of a full unit. Cut detectable warning paver units using a power saw.

## SIDEWALKS

27. Provide clear ground space at operable parts, including pedestrian push buttons. Operable parts shall be placed within unobstructed reach range specified in PROWAG section R406.
28. Place traffic signal or illumination poles, ground boxes, controller boxes, signs, drainage facilities and other items so as not to obstruct the pedestrian access route or clear ground space.
29. Street grades and cross slopes shall be as shown elsewhere in the plans.
30. Changes in level greater than 1/4 inch are not permitted.
31. The least possible grade should be used to maximize accessibility. The running slope of sidewalks and crosswalks within the public right of way may follow the grade of the parallel roadway. Where a continuous grade greater than five percent (5%) must be provided, handrails may be desirable to improve accessibility. Handrails may also be needed to protect pedestrians from potentially hazardous conditions. If provided, handrails shall comply with PROWAG R409.
32. Handrail extensions shall not protrude into the usable landing area or into intersecting pedestrian routes.
33. Driveways and turnouts shall be constructed and paid for in accordance with Item "Intersections, Driveways and Turnouts". Sidewalks shall be constructed and paid for in accordance with Item, "Sidewalks".
34. Sidewalk details are shown elsewhere in the plans.

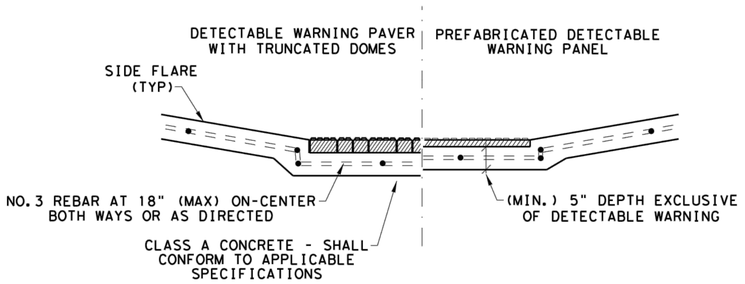


**SECTION VIEW DETAIL**
**CURB RAMP AT DETECTIBLE WARNINGS**

## DETECTABLE WARNING SURFACE DETAILS

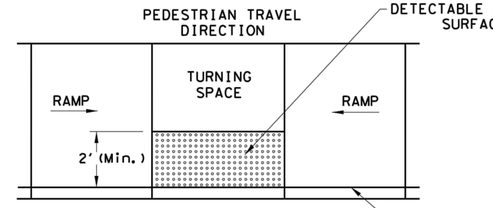


**PARALLEL CURB RAMP**
**TYPICAL PLACEMENT OF DETECTABLE WARNING SURFACE ON LANDING AT STREET EDGE.**

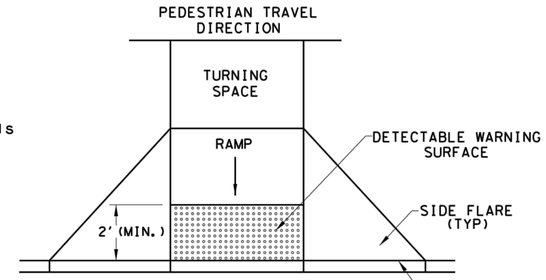


**PERPENDICULAR CURB RAMP**
**TYPICAL PLACEMENT OF DETECTABLE WARNING SURFACE ON SLOPING RAMP RUN.**

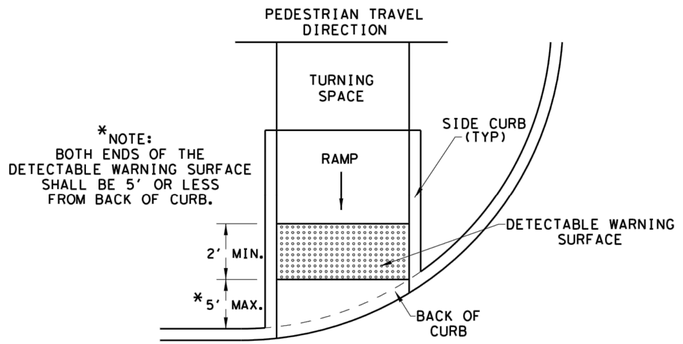


**DIRECTIONAL CURB RAMP**
TYPICAL PLACEMENT OF DETECTABLE WARNING SURFACE ON SLOPING RAMP RUN.

SHEET 2 OF 4

Texas Department of Transportation | Design Division Standard

# PEDESTRIAN FACILITIES CURB RAMPS

# PED-18

| | | | | |
|---|---|---|---|---|
| FILE: ped18 | DN: TxDOT | DW: VP | CK: KM | CK: PK & JG |
| © TxDOT: MARCH, 2002 | CONT | SECT | JOB | HIGHWAY |
| REVISIONS | | | | |
| REVISED 08,2005<br>REVISED 06,2012<br>REVISED 01,2018 | DIST | COUNTY | | SHEET NO. |
| | | | | C3.15 |

DISCLAIMER:
The use of this standard is governed by the "Texas Engineering Practice Act". No warranty of any kind is made by TxDOT for any purpose whatsoever. TxDOT assumes no responsibility for the conversion of this standard to other formats or for incorrect results or damages resulting from its use.

DATE:
FILE:

## SIDEWALK TREATMENT AT DRIVEWAYS

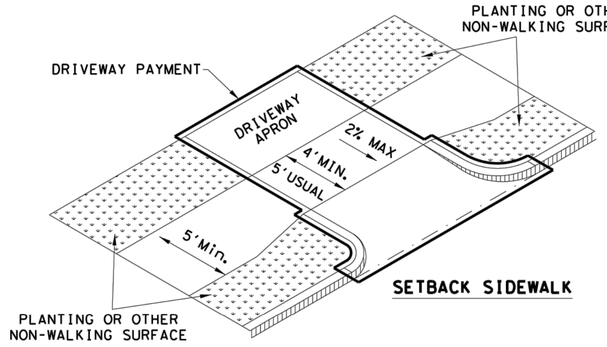


SETBACK SIDEWALK

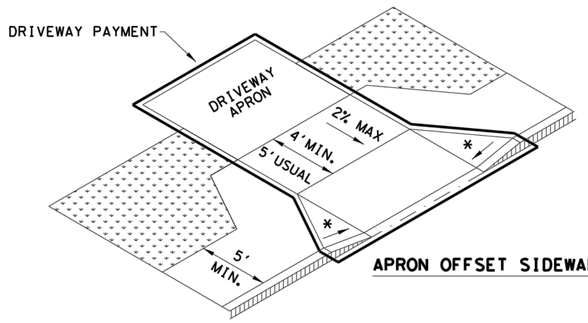


APRON OFFSET SIDEWALK




WIDE SIDEWALK

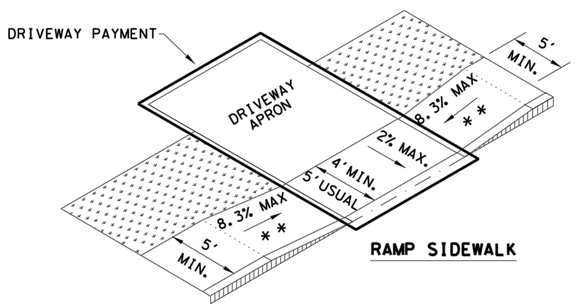


RAMP SIDEWALK

NOTES:

* WHERE DRIVEWAYS CROSS THE PEDESTRIAN ROUTE, SIDES SHALL BE FLARED AT 10% MAX SLOPE.

* * IF CURB HEIGHT IS GREATER THAN 6 INCHES, USE GRADE LESS THAN OR EQUAL TO 5%. HANDRAIL AND DETECTABLE WARNING ARE NOT REQUIRED.

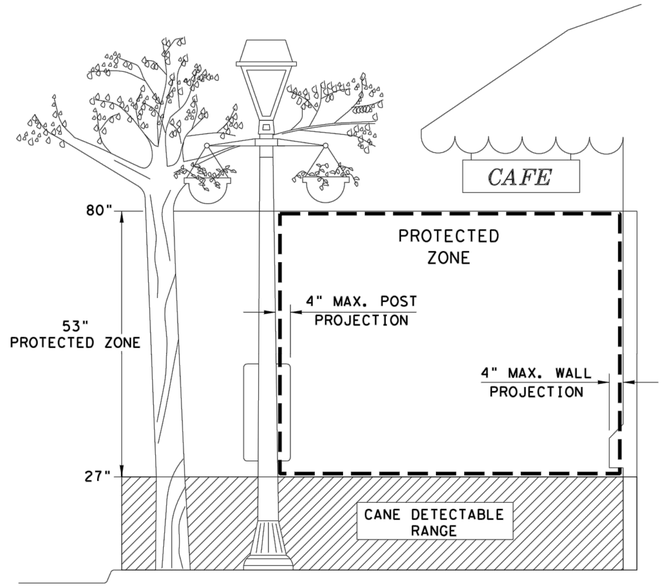


PROTECTED ZONE

NOTE: IN PEDESTRIAN CIRCULATION AREA, MAXIMUM 4" PROJECTION FOR POST OR WALL MOUNTED OBJECTS BETWEEN 27" AND 80" ABOVE THE SURFACE.

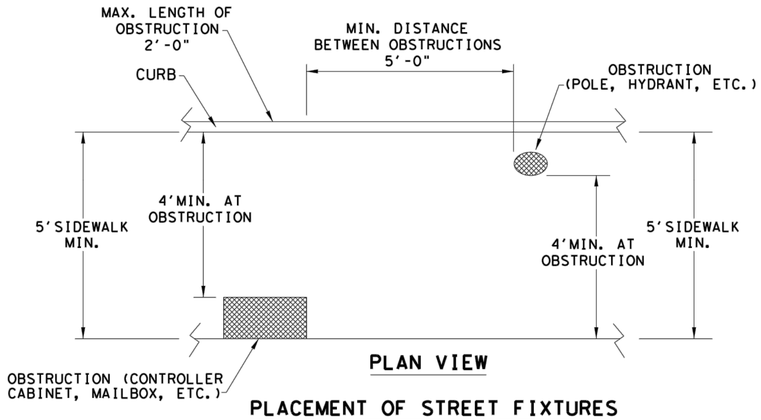


PLAN VIEW

PLACEMENT OF STREET FIXTURES

NOTE: ITEMS NOT INTENDED FOR PUBLIC USE. MINIMUM 4' X 4' CLEAR GROUND SPACE REQUIRED AT PUBLIC USE FIXTURES.

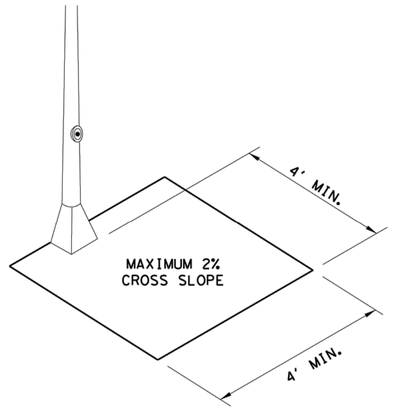


CLEAR SPACE ADJACENT TO PEDESTRIAN PUSH BUTTON

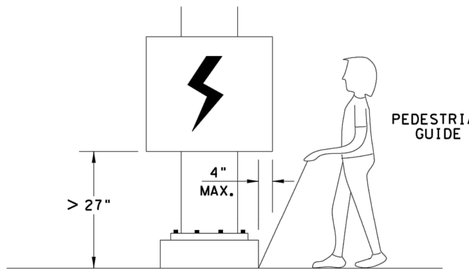


WHEN AN OBSTRUCTION OF A HEIGHT GREATER THAN 27" FROM THE SURFACE WOULD CREATE A PROTRUSION OF MORE THAN 4" INTO THE PEDESTRIAN CIRCULATION AREA, CONSTRUCT ADDITIONAL CURB OR FOUNDATION AT THE BOTTOM TO PROVIDE A MAXIMUM 4" OVERHANG.

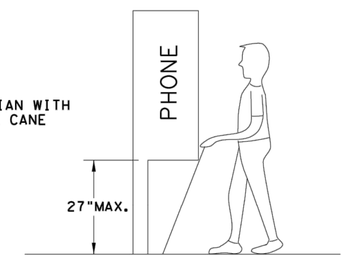


PROTRUDING OBJECTS OF A HEIGHT ≤27" ARE DETECTABLE BY CANE AND DO NOT REQUIRE ADDITIONAL TREATMENT.

DETECTION BARRIER FOR VERTICAL CLEARANCE < 80"



Texas Department of Transportation

Design Division Standard

# PEDESTRIAN FACILITIES CURB RAMPS

# PED-18

| FILE: ped18 | DN: TxDOT | DW: VP | CK: KM | CK: PK & JG |
|---|---|---|---|---|
| © TxDOT: MARCH, 2002 | CONT | SECT | JOB | HIGHWAY |
| REVISIONS | | | | |
| REVISED 08,2005<br>REVISED 06,2012<br>REVISED 01,2018 | DIST | COUNTY | | SHEET NO. |
| | | | | C3.16 |

DISCLAIMER:
The use of this standard is governed by the "Texas Engineering Practice Act". No warranty of any kind is made by TxDOT for any purpose whatsoever. TxDOT assumes no responsibility for the conversion of this standard to other formats or for incorrect results or damages resulting from its use.

DATE:
FILE:

# TYPICAL CROSSING LAYOUTS

SEE SHEET 1 OF 4 FOR DETAILS AND DIMENSIONS

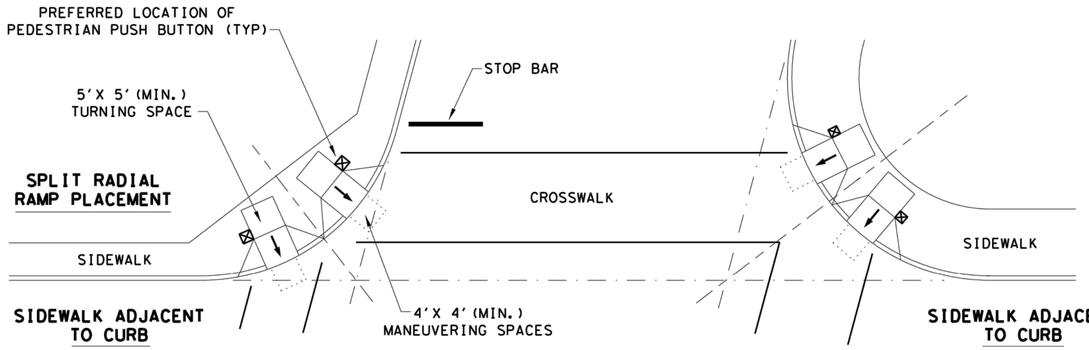


SKEWED INTERSECTION WITH "LARGE" RADIUS

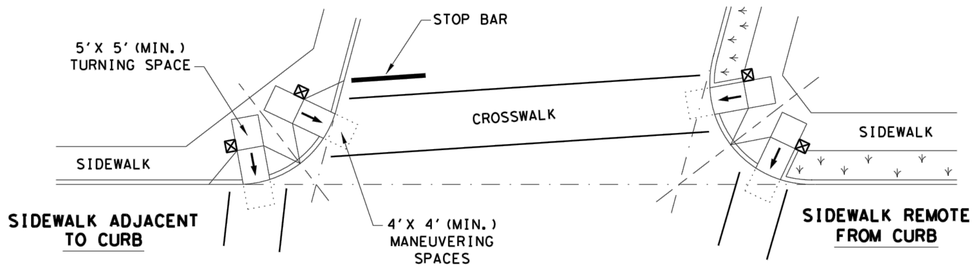


SKEWED INTERSECTION WITH "SMALL" RADIUS

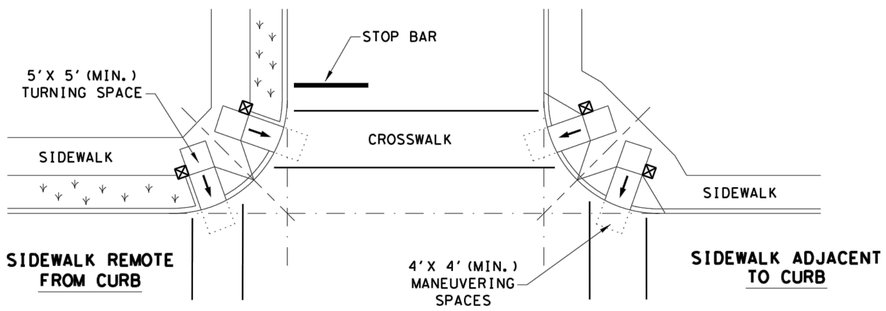


NORMAL INTERSECTION WITH "SMALL" RADIUS

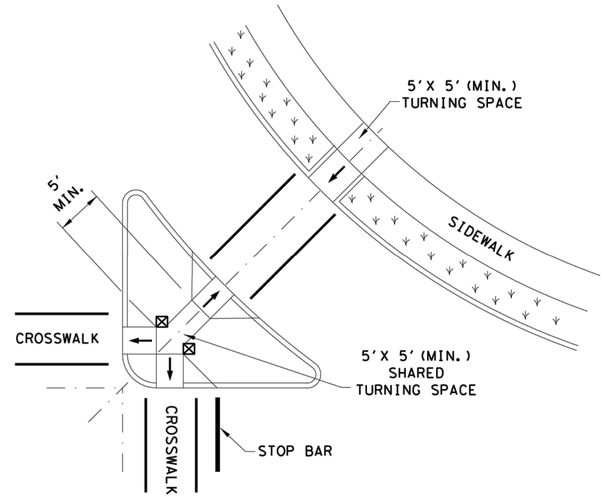


AT INTERSECTION
W/FREE RIGHT TURN & ISLAND

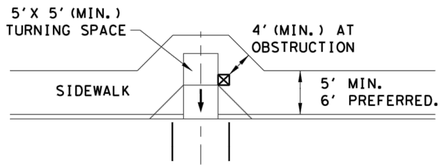


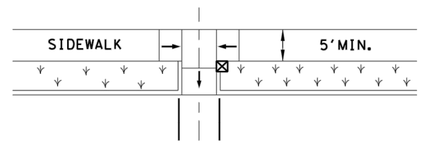


MID-BLOCK PLACEMENT
PERPENDICULAR RAMPS

**LEGEND:**

SHOWS DOWNWARD SLOPE. →

DENOTES PREFERRED LOCATION OF PEDESTRIAN PUSH BUTTON (IF APPLICABLE). ☒

DENOTES PLANTING OR NON-WALKING SURFACE NOT PART OF PEDESTRIAN CIRCULATION PATH.



Texas Department of Transportation | Design Division Standard

# PEDESTRIAN FACILITIES CURB RAMPS

# PED-18

| | | | | | |
|---|---|---|---|---|---|
| FILE: ped18 | DN: TxDOT | | DW: VP | CK: KM | CK: PK & JG |
| © TxDOT: MARCH, 2002 | CONT | SECT | JOB | | HIGHWAY |
| REVISIONS | | | | | |
| REVISED 08,2005 | DIST | COUNTY | | | SHEET NO. |
| REVISED 06,2012 | | | | | C3.17 |
| REVISED 01,2018 | | | | | |

Plotted By:Shabolt, Cody September 08, 2021 09:02:19am K:\LAC_Civil\063543031_Addison_Alpha_Road_Connector\CADD\PlanSheets\Paving_Details.dwg
This document, together with the concepts and designs presented herein, as an instrument of service, is intended only for the specific purpose and client for which it was prepared. Reuse of and improper reliance on this document without written authorization and adaptation by Kimley-Horn and Associates, Inc. shall be without liability to Kimley-Horn and Associates, Inc.

## PAVING – GENERAL NOTES

1. GENERAL:
   PAVEMENT THICKNESS IS AS SHOWN IN ITEM 7. SUBGRADE DESIGN SHALL CONFORM TO TOWN OF ADDISON PUBLIC WORKS REQUIREMENTS IN ITEM 3, AND SHALL EXTEND 12" MIN. BEHIND THE BACK OF CURB.
2. REINFORCED CONCRETE PAVEMENT:
   A. CONCRETE STRENGTH SHALL BE AS SHOWN IN ITEM 7 (NCTCOG LATEST EDITION).
   B. ALL CURBS SHALL BE INTEGRAL WITH PAVEMENT AND SHALL BE OF THE SAME STRENGTH AS CONCRETE PAVEMENT.
   C. DETAIL AND ARRANGEMENT OF PAVEMENT JOINTS, ALL TYPES, SHALL BE AS SHOWN ON THE TOWN STANDARD CONSTRUCTION DETAILS.
   D. BAR LAPS SHALL BE THIRTY DIAMETERS.
   E. REINFORCING STEEL SHALL BE #3 REBAR (3/8") ON 18" CENTERS FOR 8" OR LESS. #4 FOR 10" OR ABOVE
3. SUBGRADE:
   SUBGRADE UNDER ALL PAVEMENT SHALL BE 6" THICK AND SHALL BE STABILIZED WITH AT LEAST 30 LBS. PER SQ. YD. HYDRATED LIME, COMPACTED TO A DENSITY NOT LESS THAN 95 PERCENT. LABORATORY TESTS MUST BE SUBMITTED TO THE PUBLIC WORKS DEPARTMENT FOR APPROVAL TO DETERMINE AMOUNT OF LIME REQUIRED. LABORATORY TEST MAY BE WAIVED PROVIDED AT LEAST 36 LBS. OF LIME PER SQ. YD. IS USED. SEE NCTCOG ITEM 301.2 "LIME TREATMENT". FLEXIBLE BASE (CRUSHED STONE/CONCRETE) PER NCTCOG ITEM 301.5 MAY BE SUBSTITUTED FOR LIME TREATMENT WITH THE APPROVAL OF THE TOWN ENGINEER.
4. REBAR SHALL BE SUPPORTED BY BAR CHAIRS OR OTHER DEVICES APPROVED BY TOWN ENGINEER.
5. NO TRAFFIC ON FINISHED SUBGRADE SHALL BE PERMITTED AFTER REINFORCING STEEL IS INSTALLED ABOVE SUBGRADE. NO TRAFFIC SHALL BE PERMITTED BEFORE OR DURING THE PLACING OF CONCRETE.
6. CROSS SLOPE OF STRAIGHT CROWN STREETS SHALL BE 1/4" PER FOOT UNLESS APPROVED BY THE TOWN ENGINEER.
7. PAVEMENT THICKNESS AND STRENGTHS SHALL BE AS FOLLOWS:
   MAJOR ARTERIAL – 10" CLASS "P1" OR "P2."
   MINOR ARTERIAL – 8" CLASS "P1" OR "P2."
   COMMERCIAL/INDUSTRIAL COLLECTOR – 8" CLASS "P1" OR "P2."
   RESIDENTIAL COLLECTOR – 8" CLASS "P1" OR "P2."
   RESIDENTIAL LOCAL – 8" CLASS "P1" OR "P2."
   SIDEWALK AND BFR's–4"–CLASS "A"
   DRIVE APPROACH–8"–CLASS "P2"
   ALLEY–6" CLASS "P1" OR "P2."
8. CONCRETE MIX DESIGN SHALL BE AS DEFINED BY NCTCOG 303.3.
9. ALL MEDIANS AND PARKWAYS SHALL BE PROVIDED WITH BERMUDA GROUND COVER.
10. ONCE A CURB ABUTTING A THOROUGHFARE HAS BEEN SAWCUT AND REMOVED, THE CONTRACTOR MUST REPLACE THE CONCRETE WITH A NEW POUR (i.e. DRIVEWAY) WITHIN 14 CALENDAR DAYS. LIQUIDATED DAMAGES WILL BE ASSESSED AT $500 PER DAY FOR EACH CALENDAR DAY IN EXCESS OF 14 CALENDAR DAYS. PAYMENT SHALL BE MADE PRIOR TO ACCEPTANCE OR ISSUANCE OF A CERTIFICATE OF OCCUPANCY.
11. ALL SIDEWALKS AND ACCESSIBLE ROUTES SHALL HAVE A MAXIMUM LONGITUDINAL SLOPE OF 5% AND A MAXIMUM CROSS SLOPE OF 2%.
12. ALLEYS AND DRIVEWAYS
    A. CONCRETE FOR ALLEY RETURNS AND DRIVEWAYS SHALL HAVE A MINIMUM COPRESSIVE STRENGTH AT 28 DAYS IDENTICAL TO THAT SPECIFIED FOR THE STREET PAVEMENT OR BASE WHEN BUILT AS COMPONENTS OF A CONCRETE PAVING PROJECT. WHEN BUILT SEPARATELY, THE STRENGTH SHALL BE AS SPECIFIED ON THE CONSTRUCTION PLAN.
    B. SPACING AND CONSTRUCTION OF JOINTS SHALL CONFORM TO PARABOLIC STREET PAVEMENT.

Addison! PUBLIC WORKS DEPARTMENT | PAVING GENERAL NOTES | STANDARD CONSTRUCTION DETAILS PAVING | DATE: AUGUST, 2010 | REV DATE: – | SHEET : SD–P01

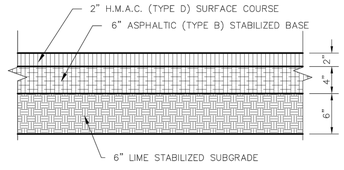


ASPHALT PAVING CROSS SECTION

NOTE:
CUT OF 6" INTO EXISTING PAVEMENT IS REQUIRED FOR CONSTRUCTION JOINT WITH NEW POURS TO GET A SMOOTH FINISH.

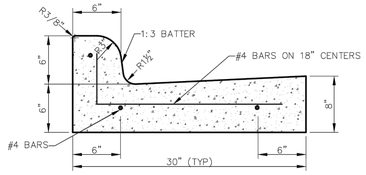


Addison! PUBLIC WORKS DEPARTMENT | CURB AND GUTTER & ASPHALT PAVING CROSS SECTION | STANDARD CONSTRUCTION DETAILS PAVING | DATE: AUGUST, 2010 | REV DATE: – | SHEET : SD–P06

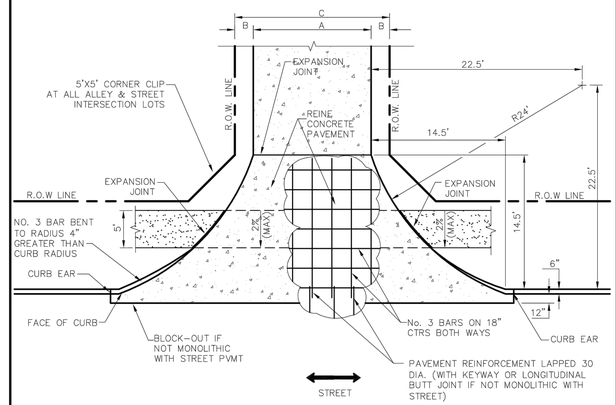


*** ACCESSIBLE PATH MUST NOT BE OBSTRUCTED BY CURB AND MUST NOT EXCEED 2% CROSS–SLOPE.**

| ALLEY WIDTH | A | B | C |
|---|---|---|---|
| 12' | 12' | 2'–0" | 16' |
| 16' | 16' | 2'–0" | 20' |
| 20' | 20' | 2'–0" | 24' |

ALLEY RETURN DETAILS
NTS

Addison! DEPARTMENT OF PUBLIC WORKS | ALLEY RETURN DETAIL | STANDARD CONSTRUCTION DETAILS PAVING | DATE: AUGUST, 2010 | REV DATE: – | SHEET : SD–P12

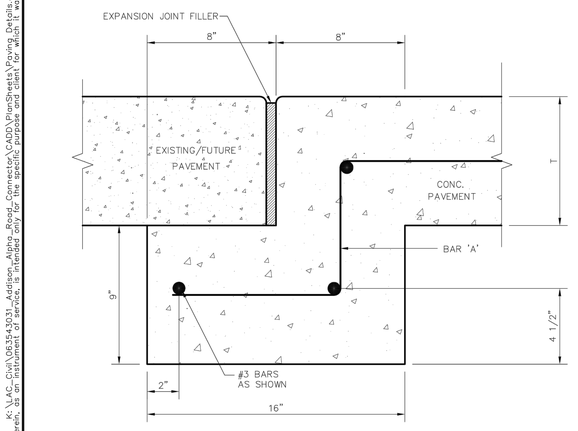


NOTES:
1. PAVEMENT BARS TO BE BENT DOWN INTO HEADER.
2. HEADER AND PAVEMENT TO BE MONOLITHIC.

T=PAVEMENT THICKNESS

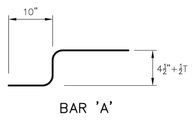


STREET HEADER
NTS

Addison! PUBLIC WORKS DEPARTMENT | STREET HEADER | STANDARD CONSTRUCTION DETAILS PAVING | DATE: AUGUST, 2010 | REV DATE: – | SHEET : SD–P15

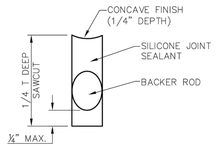


JOINT DETAIL
NTS

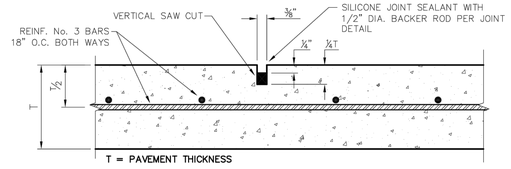


SAWED DUMMY JOINTS
NTS

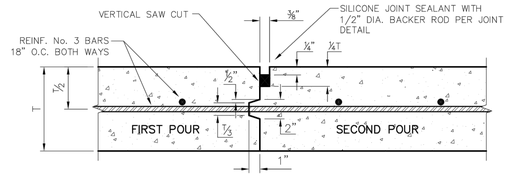


NOTE: CONTRACTOR SHALL PROTECT KEYWAY PRIOR TO SECOND POUR. IF LONGITUDINAL KEYWAY IS DAMAGED, CONTRACTOR SHALL REPAIR WITH THE USE OF LONGITUDINAL BUTT JOINT. DRILL AND GROUT DOWELS INTO FIRST POUR.

CONSTRUCTION JOINTS FOR PAVEMENT
NTS
TRANSVERSE AND LONGITUDINAL JOINTS

Addison! PUBLIC WORKS DEPARTMENT | JOINT DETAILS | STANDARD CONSTRUCTION DETAILS PAVING | DATE: AUGUST, 2010 | REV DATE: – | SHEET : SD–P18

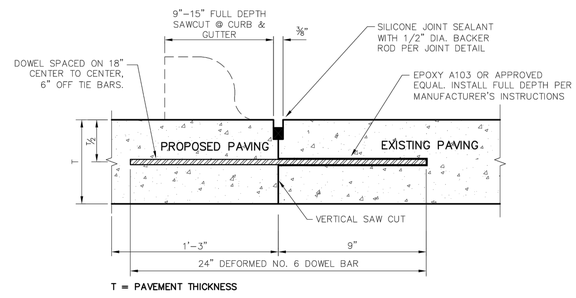


NOTES:
1. NO. 5 DEFORMED BAR MAY BE USED IN 6 INCH PAVEMENT.
2. LONGITUDINAL BUTT CONSTRUCTION MAY BE UTILIZED IN PLACE OF LONGITUDINAL HINGED (KEYWAY) JOINT AT CONTRACTORS OPTION.
3. DOWEL BARS SHALL BE DRILLED INTO PAVEMENT HORIZONTALLY BY USE OF A MECHANICAL RIG.
4. DRILLING BY HAND IS NOT ACCEPTABLE. PUSHING DOWEL BARS INTO GREEN CONCRETE IS NOT ACCEPTABLE.

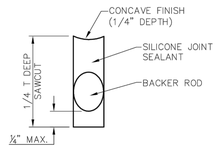


JOINT DETAIL
NTS

LONGITUDINAL BUTT JOINT
NTS

Addison! PUBLIC WORKS DEPARTMENT | LONGITUDINAL BUTT JOINT | STANDARD CONSTRUCTION DETAILS PAVING | DATE: AUGUST, 2010 | REV DATE: – | SHEET : SD–P19

811 Know what's below. Call before you dig.

| No. | REVISIONS | DATE | BY |
|---|---|---|---|
| | | | |

PROJECT NO. 2021–01C/ BID NO. 21–69

Kimley»Horn
2201 WEST ROYAL LANE, SUITE 275, IRVING, TX 75063
PHONE: 214-420-5600
WWW.KIMLEY-HORN.COM
© 2021 KIMLEY-HORN AND ASSOCIATES, INC.
TEXAS REGISTERED ENGINEERING FIRM #F-928

9/10/2021

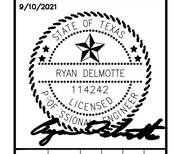


| KHA PROJECT 063543031 | DATE 09/10/2021 | SCALE AS SHOWN | DESIGNED BY RMD | DRAWN BY CDS | CHECKED BY LNA |
|---|---|---|---|---|---|

**TOWN OF ADDISON**
ALPHA ROAD CONN.
FROM FARMERS BRANCH CREEK TO ALPHA ROAD

PAVING
STANDARD DETAILS
TOWN OF ADDISON
SHEET 1 OF 4

SHEET NUMBER
C3.18

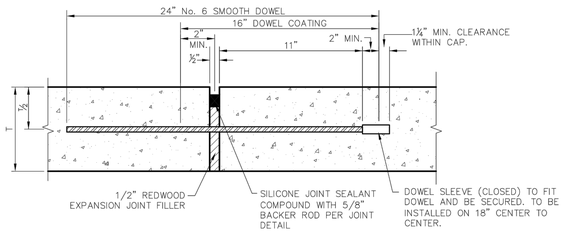


T=PAVEMENT THICKNESS

NOTES:
1. DOWELS AND REINFORCING BARS SHALL BE SUPPORTED BY AN APPROVED DEVICE AND MUST BE TIED OR CHAIRED ON EACH SIDE.
2. DOWELS MUST BE PERPENDICULAR TO FACE OF CONCRETE..
3. NO. 5 SMOOTH DOWEL BARS MAY BE USED IN 6" PAVEMENT.
4. TRANSVERSE EXPANSION JOINTS SHALL HAVE A MAXIMUM SPACING OF 600 FT.
5. TRANSVERSE EXPANSION JOINTS SHALL BE LOCATED AT INTERSECTIONS.

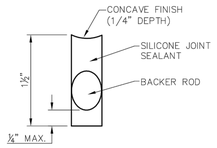


JOINT DETAIL
NTS

TRANSVERSE EXPANSION JOINT
N.T.S.

| Addison! PUBLIC WORKS DEPARTMENT | TRANSVERSE EXPANSION JOINT | STANDARD CONSTRUCTION DETAILS PAVING | | |
|---|---|---|---|---|
| | | DATE: AUGUST, 2010 | REV DATE: – | SHEET : SD–P20 |

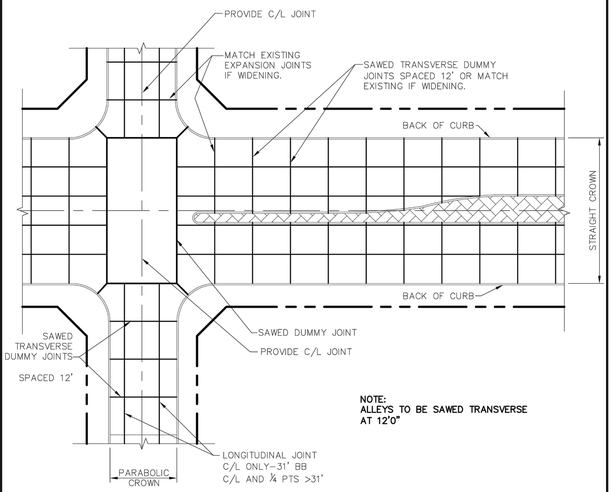


NOTE:
ALLEYS TO BE SAWED TRANSVERSE AT 12'0"

SPACING DIAGRAM FOR TRANSVERSE JOINTS
NTS

| Addison! PUBLIC WORKS DEPARTMENT | SPACING DIAGRAM FOR TRANSVERSE JOINTS | STANDARD CONSTRUCTION DETAILS PAVING | | |
|---|---|---|---|---|
| | | DATE: AUGUST, 2010 | REV DATE: – | SHEET : SD–P22 |

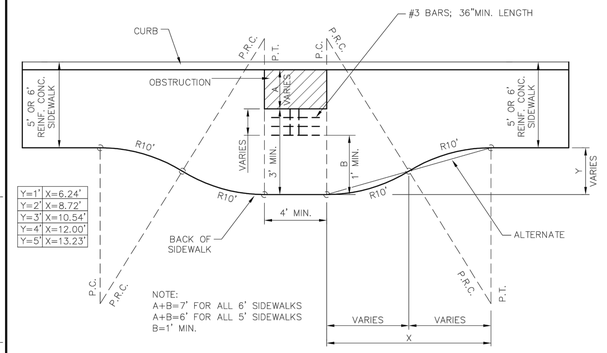


SIDEWALK WIDENING REQUIRED AROUND OBSTACLE IN SIDEWALK
NTS

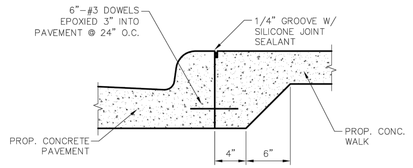


JOINT DETAIL FOR SIDEWALKS ADJACENT TO CURB
NTS

| Addison! PUBLIC WORKS DEPARTMENT | SIDEWALK WIDENING REQUIRED AROUND OBSTACLE IN SIDEWALK & JOINT DETAIL FOR SIDEWALKS ADJACENT TO CURB | STANDARD CONSTRUCTION DETAILS PAVING | | |
|---|---|---|---|---|
| | | DATE: AUGUST, 2010 | REV DATE: – | SHEET : SD–P25 |

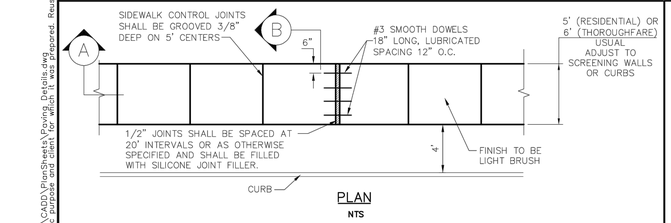


PLAN
NTS

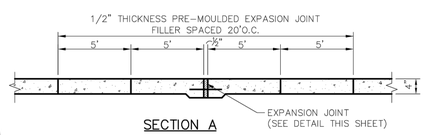


SECTION A
NTS

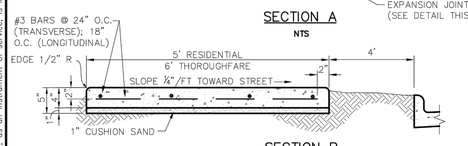


SECTION B
NTS

NOTE:
WHEN CONCRETE WALK IS ADJACENT TO CURB, DEPTH OF EXPANSION JOINT MATERIAL SHALL BE SUFFICIENT TO PREVENT CONCRETE TO CONCRETE CONTACT BETWEEN WALK AND CURB.

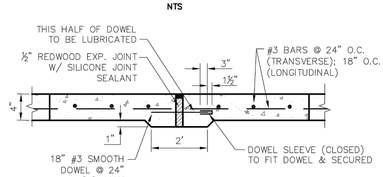


EXPANSION JOINT DETAIL
NTS

| Addison! PUBLIC WORKS DEPARTMENT | CONCRETE SIDEWALK | STANDARD CONSTRUCTION DETAILS PAVING | | |
|---|---|---|---|---|
| | | DATE: AUGUST, 2010 | REV DATE: – | SHEET : SD–P26 |

ARTERIAL

6' SIDEWALK EDGE SHALL BE LOCATED ON THE R.O.W. LINE OF ARTERIAL STREETS.

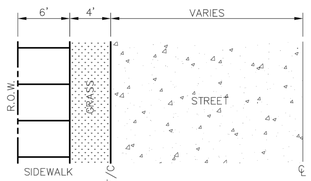


RESIDENTIAL/COLLECTOR

5' SIDEWALK SHALL BE LOCATED 1' INSIDE R.O.W. OF RESIDENTIAL STREETS.

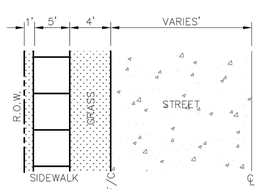


| Addison! PUBLIC WORKS DEPARTMENT | CONCRETE SIDEWALK CONTINUED | STANDARD CONSTRUCTION DETAILS PAVING | | |
|---|---|---|---|---|
| | | DATE: AUGUST, 2010 | REV DATE: – | SHEET : SD–P27 |

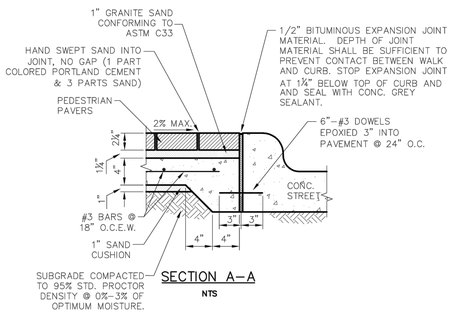


SECTION A–A
NTS

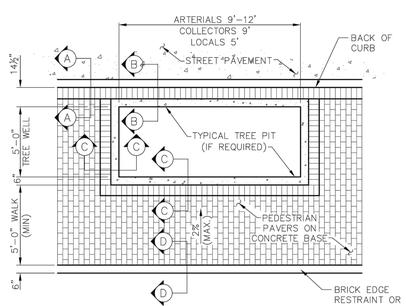


SIDEWALK PLAN: BRICK PAVERS
NTS

NOTE:
SEE SD–P29 FOR ADDITIONAL SECTIONS AND GENERAL NOTES

| Addison! PUBLIC WORKS DEPARTMENT | SIDEWALK BRICK PAVERS | STANDARD CONSTRUCTION DETAILS PAVING | | |
|---|---|---|---|---|
| | | DATE: AUGUST, 2010 | REV DATE: – | SHEET : SD–P28 |

Know what's below. Call before you dig.

| No. | REVISIONS | DATE | BY |
|---|---|---|---|
| | | | |

PROJECT NO. 2021–01C/ BID NO. 21–69

Kimley»Horn
2201 WEST ROYAL LANE, SUITE 275, IRVING, TX 75063
PHONE: 214-420-5600
WWW.KIMLEY-HORN.COM
© 2021 KIMLEY-HORN AND ASSOCIATES, INC.
TEXAS REGISTERED ENGINEERING FIRM #F-928

9/10/2021

STATE OF TEXAS
RYAN DELMOTTE
114242
LICENSED PROFESSIONAL ENGINEER

KHA PROJECT 063543031
DATE 09/10/2021
SCALE AS SHOWN
DESIGNED BY RMD
DRAWN BY CDS
CHECKED BY LNA

**TOWN OF ADDISON**
ALPHA ROAD CONN.
FROM FARMERS BRANCH CREEK TO ALPHA ROAD

PAVING
STANDARD DETAILS
TOWN OF ADDISON
SHEET 2 OF 4

SHEET NUMBER
C3.19

Plotted By: Shadbolt, Cody September 08, 2021 - 09:02:22am K:\LAC_Civil\063543031_Addison_Alpha_Road_Connector\CADD\PlanSheets\Paving Details.dwg
This document, together with the concepts and designs presented herein, as an instrument of service, is intended only for the specific purpose and client for which it was prepared. Reuse of and improper reliance on this document without written authorization and adaptation by Kimley-Horn and Associates, Inc. shall be without liability to Kimley-Horn and Associates, Inc.

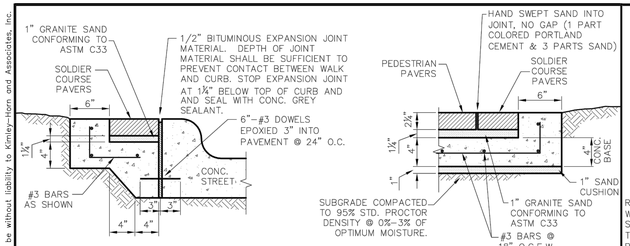


SECTION B–B

NTS




SECTION C–C

NTS

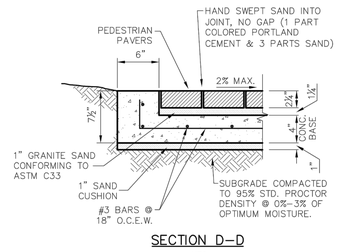


SECTION D–D

NTS

NOTES:

1. PEDESTRIAN PAVERS AND SOLDIER COURSE PAVERS SHALL BE LIGHT TRAFFIC PAVING BRICK MEETING ASTM C902, CLASS SX, TYPE II, APPLICATION PX, W/ DIMENSIONS (W)4"X(L)8"X(T)2¼".
2. PEDESTRIAN PAVERS SHALL BE APPROVED BY PUBLIC WORKS.
3. PROVIDE BRICK WITHOUT FROGS OR CORES, IN SURFACES EXPOSED TO VIEW IN COMLETED WORK.

Addison!

PUBLIC WORKS DEPARTMENT

SIDEWALK BRICK PAVERS CONTINUED

STANDARD CONSTRUCTION DETAILS PAVING

| DATE: | REV DATE: | SHEET : |
|---|---|---|
| AUGUST, 2010 | – | SD–P29 |

*** DRAIN PIPE MAY BE OFFSET FURTHER FROM CENTER IF DESIRED. OFFSET IS TO AVOID CONFLICT WITH LIGHT POLE GROUNDING ROD WHEN TREES ARE IN LINE WITH LIGHTS.**

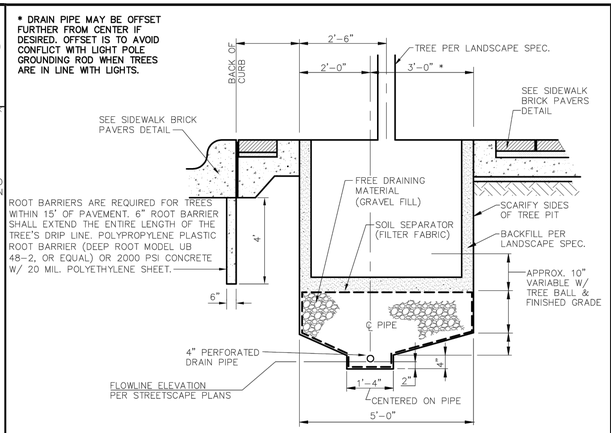


SECTION PERPENDICULAR TO CURB

NTS

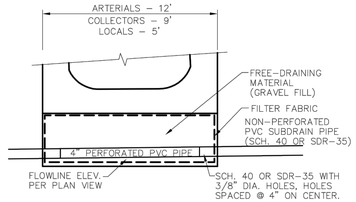


SECTION PARALLEL TO CURB

NTS

Addison!

PUBLIC WORKS DEPARTMENT

SUBSURFACE DRAIN SYSTEM

STANDARD CONSTRUCTION DETAILS PAVING

| DATE: | REV DATE: | SHEET : |
|---|---|---|
| AUGUST, 2010 | – | SD–P30 |

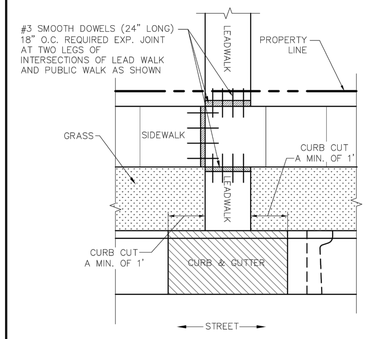


NOTES:

1. ALL SIDEWALKS AND DRIVEWAY REINFORCEMENT SHALL BE #3 STEEL 18" O.C.E.W. TIED TO #3 SMOOTH DOWELS AND SET UPON CHAIRS.
2. 1–INCH CUSHION SAND REQUIRED ON SUBGRADE COMPACTED WITHIN 95% STANDARD PROCTOR DENSITY.
3. POURS SHALL REQUIRE A PRE–POUR INSPECTION FOR FORMWORK, REINFORCEMENT AND GEOMETRY. VISUAL INSPECTIONS MAY BE MADE AFTER THE POUR TO ADDRESS TOOLED JOINTS, FINISH, SUBGRADE INTEGRITY, ETC.
4. ENSURE THAT FLATWORK DOES NOT OBSCURE ABOVE–GROUND APPURTENANCES (I.E. VALVES, MH LIDS)
5. EXPOSED AGGREGATE CONCRETE IS NOT ACCEPTABLE FOR SIDEWALK WITHIN PUBLIC RIGHT–OF–WAY.
6. SIDEWALKS SHALL BE 5' WIDE (MIN.) WITH 42" (MIN.) UNOBSTRUCTED. SIDEWALKS ALONG ARTERIAL (THOROUGHFARE) ROADWAYS SHALL BE 6' MIN.
7. FOR CURB DETAIL SEE CURB AND GUTTER & ASPHALT PAVING CROSS SECTION

Addison!

PUBLIC WORKS DEPARTMENT

CURB AND LEAD WALK REPAIR

STANDARD CONSTRUCTION DETAILS PAVING

| DATE: | REV DATE: | SHEET : |
|---|---|---|
| AUGUST, 2010 | – | SD–P34 |

NOTES:

1. THE FINISHED GRADE IN ALL AREAS DISTURBED DURING DRIVEWAY CONSTRUCTION SHALL RECEIVE SOLID SOD.
2. WHEN SIDEWALK CROSSES DRIVEWAYS, THE CROSS SLOPE SHALL NOT EXCEED 2%.

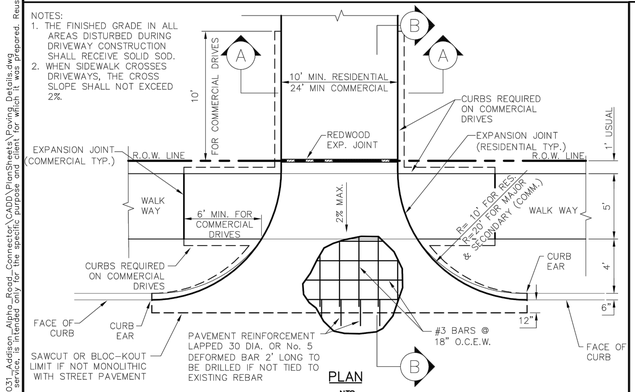


PLAN

NTS

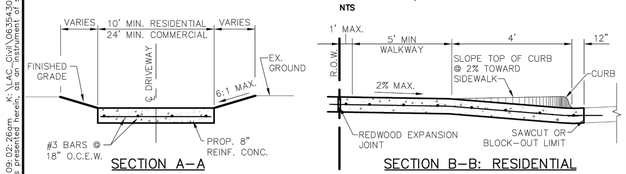


SECTION A–A

NTS




SECTION B–B: RESIDENTIAL

NTS

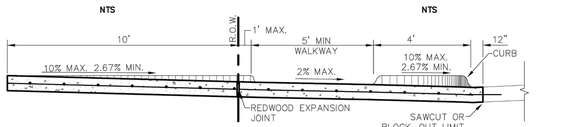


SECTION B–B: COMMERCIAL

NTS

Addison!

PUBLIC WORKS DEPARTMENT

DRIVEWAY RETURN DETAILS

STANDARD CONSTRUCTION DETAILS PAVING

| DATE: | REV DATE: | SHEET : |
|---|---|---|
| AUGUST, 2010 | – | SD–P35 |

GENERAL NOTES FOR PEDESTRIAN FACILITIES

1. ALL SLOPES ARE MAXIMUM ALLOWABLE. THE LEAST POSSIBLE SLOPE THAT WILL STILL DRAIN PROPERLY SHOULD BE USED. ADJUST CURB RAMP LENGTH OR GRADE OF APPROACH SIDEWALKS AS DIRECTED.
2. LANDINGS SHALL BE 5'X5' MINIMUM WITH A MAXIMUM 2% SLOPE IN ANY DIRECTION.
3. MANEUVERING SPACE AT THE BOTTOM OF CURB RAMPS SHALL BE A MINIMUM OF 4'X4' WHOLLY CONTAINED WITHIN THE CROSSWALK AND WHOLLY OUTSIDE THE PARALLEL VEHICULAR TRAVEL PATH.
4. MAXIMUM ALLOWABLE CROSS SLOPE ON SIDEWALK AND CURB RAMP SURFACES IS 2%
5. CURB RAMPS WITH RETURNED CURBS MAY BE USED ONLY WHERE PEDESTRIANS WOULD NOT NORMALLY WALK ACROSS THE RAMP, EITHER BECAUSE THE ADJACENT SURFACE IS PLANTING OR OTHER NON–WALKING SURFACE OR BECAUSE THE SIDE APPROACH IS SUBSTANTIALLY OBSTRUCTED. OTHERWISE, PROVIDE FLARED SIDES.
6. ADDITIONAL INFORMATION ON CURB RAMP LOCATION, DESIGN, LIGHT REFLECTIVE VALUE AND TEXTURE MAY BE FOUND IN THE CURRENT EDITION OF THE TEXAS ACCESSIBILITY STANDARDS (TAS) AND 16 TAC §68.102.
7. CURB RAMPS SHALL BE ALIGNED WITH THEORETICAL CROSSWALKS, OR AS DIRECTED BY THE TOWN ENGINEER.
8. HANDRAILS ARE NOT REQUIRED ON CURB RAMPS. PROVIDE CURB RAMPS WHEREVER ON ACCESSIBLE ROUTE CROSSES (PENETRATES) A CURB.
9. FLARE SLOPE SHALL NOT EXCEED 10% MEASURED ALONG CURB LINE.
10. BARRIER FREE RAMPS SHALL BE CONSTRUCTED IN ACCORDANCE WITH THE CURRENT EDITION OF THE TEXAS ACCESSIBILITY STANDARDS (TAS).
11. ALL BARRIER FREE RAMPS MUST PASS AN INDEPENDENT INSPECTION. A LETTER OF COMPLIANCE ACCEPTANCE IS REQUIRED PRIOR TO FINAL ACCEPTANCE BY THE TOWN OF ADDISON.
12. STREETS ON STEEP GRADE WILL REQUIRE LONGER TRANSITION ON UPGRADE SIDE.
13. MAXIMUM SLOPE ON RAMP PORTION SHALL NOT EXCEED 1" PER FOOT AT ANY LOCATION. VERTICAL DISTANCE BETWEEN STREET AND RAMP SHALL NOT EXCEED ¼".

GENERAL NOTES FOR DETECTABLE WARNINGS

1. CURB RAMPS MUST CONTAIN A DETECTABLE WARNING SURFACE THAT CONSIST OF RAISED TRUNCATED DOMES COMPLYING WITH SECTION 4.29 OF THE TEXAS ACCESSIBILITY STANDARDS (TAS). THE SURFACE MUST CONTRAST VISUALLY WITH THE ADJOINING SURFACES, INCLUDING SIDE FLARES. FURNISH DARK RED COLORED DETECTABLE WARNING SURFACE ADJACENT TO UNCOLORED CONCRETE AND CREAM COLORED DETECTABLE WARNING SURFACE ADJACENT TO DARK RED COLORED BRICK PAVERS.
2. DETECTABLE WARNING SURFACES MUST BE SLIP RESISTANT AND NOT ALLOW WATER TO ACCUMULATE.
3. ALIGN TRUNCATED DOMES IN THE DIRECTION OF PEDESTRIAN TRAVEL WHEN ENTERING THE STREET.
4. DETECTABLE WARNING SURFACES SHALL BE A MINIMUM OF 24" IN DEPTH IN THE DIRECTION OF PEDESTRIAN TRAVEL, AND EXTEND THE FULL WIDTH OF THE CURB RAMP OR LANDING WHERE THE PEDESTRIAN ACCESS ROUTE ENTERS THE STREET.
5. DETECTABLE WARNING SURFACES SHALL BE LOCATED SO THAT THE EDGE NEAREST THE CURB LINE IS A MINIMUM OF 6" AND A MAXIMUM OF 8" FROM THE EXTENSION OF THE FACE OF CURB AND SHALL BE AN INTEGRAL PART OF THE WALKING SURFACE. DETECTABLE WARNING SURFACES MAY BE CURVED ALONG THE CORNER RADIUS.

GENERAL NOTES FOR DETECTABLE WARNING PAVER UNITS

1. DETECTABLE WARNING PAVER UNITS SHALL MEET OR EXCEED ALL REQUIREMENTS OF ASTM C–936, C–33, AND BE LAID IN A TWO BY TWO UNIT BASKET WEAVE PATTERN OR AS DIRECTED.
2. LAY FULL–SIZE UNITS FIRST FOLLOWED BY CLOSURE UNITS CONSISTING OF AT LEAST 25 PERCENT OF A FULL UNIT. CUT DETECTABLE WARNING PAVER UNITS USING A POWER SAW.

Addison!

PUBLIC WORKS DEPARTMENT

PEDESTRIAN FACILITIES GENERAL NOTES

STANDARD CONSTRUCTION DETAILS PAVING

| DATE: | REV DATE: | SHEET : |
|---|---|---|
| AUGUST, 2010 | – | SD–P37 |

811

Know what's below.
Call before you dig.

| No. | REVISIONS | DATE | BY |
|---|---|---|---|
| | | | |

PROJECT NO. 2021–01C/ BID NO. 21–69


Kimley»Horn

2201 WEST ROYAL LANE, SUITE 275, IRVING, TX 75063
PHONE: 214-420-5600
WWW.KIMLEY-HORN.COM



© 2021 KIMLEY-HORN AND ASSOCIATES, INC.
TEXAS REGISTERED ENGINEERING FIRM #F-928


9/10/2021

STATE OF TEXAS
RYAN DELMOTTE
114242
LICENSED PROFESSIONAL ENGINEER

| KHA PROJECT 063543031 | DATE 09/10/2021 | SCALE AS SHOWN | DESIGNED BY RMD | DRAWN BY CDS | CHECKED BY LNA |
|---|---|---|---|---|---|

**TOWN OF ADDISON**
ALPHA ROAD CONN.
FROM FARMERS BRANCH CREEK TO ALPHA ROAD

PAVING
STANDARD DETAILS
TOWN OF ADDISON
SHEET 3 OF 4

SHEET NUMBER
C3.20


Plotted By:Shadbolt, Cody, September 08, 2021 - 09:02:26am K:\LAC_Civil\063543031_Addison_Alpha_Road_Connector\CADD\PlanSheets\Paving Details.dwg
This document, together with the concepts and designs presented herein, as an instrument of service, is intended only for the specific purpose and client for which it was prepared. Reuse of and improper reliance on this document without written authorization and adaptation by Kimley-Horn and Associates, Inc. shall be without liability to Kimley-Horn and Associates, Inc.

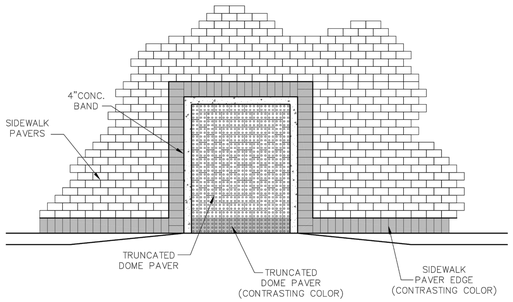


NOTE:
ALL PAVER COLORS TO BE APPROVED BY TOWN OF ADDISON.

Addison!
PUBLIC WORKS DEPARTMENT

TYPICAL PATTERN FOR PAVER SIDEWALK AND CURB RAMP

| STANDARD CONSTRUCTION DETAILS PAVING | | |
|---|---|---|
| DATE: AUGUST, 2010 | REV DATE: – | SHEET : SD-P40 |

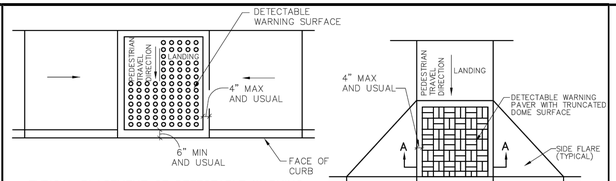


TYPICAL PLACEMENT OF DETECTABLE WARNING SURFACE ON LANDING AT STREET EDGE.




TRUNCATED DOME PATTERN CURB RAMP

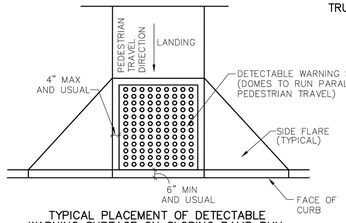


TYPICAL PLACEMENT OF DETECTABLE WARNING SURFACE ON SLOPING RAMP RUN.

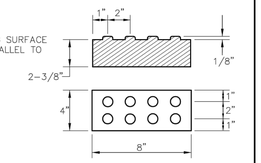


DETECTABLE WARNING PAVER

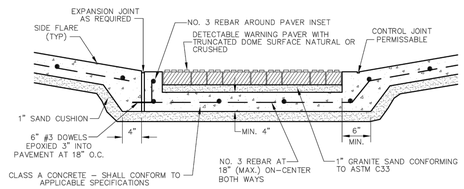


SECTION A–A

DETECTABLE WARNING PAVER (OPTION)

Addison!
PUBLIC WORKS DEPARTMENT

DETECTABLE WARNING PAVER

| STANDARD CONSTRUCTION DETAILS PAVING | | |
|---|---|---|
| DATE: AUGUST, 2010 | REV DATE: – | SHEET : SD-P41 |

811
Know what's below.
Call before you dig.

| No. | REVISIONS | DATE | BY |
|---|---|---|---|
| | | | |

PROJECT NO. 2021-01C/ BID NO. 21-69

Kimley»Horn
2201 WEST ROYAL LANE, SUITE 275, IRVING, TX 75063
PHONE: 214-420-5600
WWW.KIMLEY-HORN.COM
© 2021 KIMLEY-HORN AND ASSOCIATES, INC.
TEXAS REGISTERED ENGINEERING FIRM #F-928

9/10/2021

STATE OF TEXAS
RYAN DELMOTTE
114242
LICENSED
PROFESSIONAL ENGINEER

| KHA PROJECT 063543031 | DATE 09/10/2021 |
|---|---|
| SCALE | AS SHOWN |
| DESIGNED BY | RMD |
| DRAWN BY | CDS |
| CHECKED BY | LNA |

**TOWN OF ADDISON**
ALPHA ROAD CONN.
FROM FARMERS BRANCH CREEK TO ALPHA ROAD

PAVING
STANDARD DETAILS
TOWN OF ADDISON
SHEET 4 OF 4

SHEET NUMBER
C3.21

Plotted By:Shadbolt, Cody September 08, 2021 09:02:27am K:\LAC_Civil\063543031_Addison_Alpha_Road_Connector\CADD\PlanSheets\Paving Details.dwg
This document, together with the concepts and designs presented herein, as an instrument of service, is intended only for the specific purpose and client for which it was prepared. Reuse of and improper reliance on this document without written authorization and adaptation by Kimley-Horn and Associates, Inc. shall be without liability to Kimley-Horn and Associates, Inc.

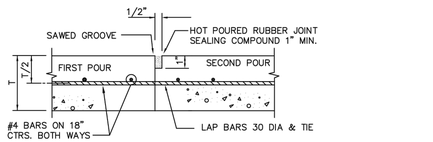


## CONSTRUCTION JOINT

N.T.S.

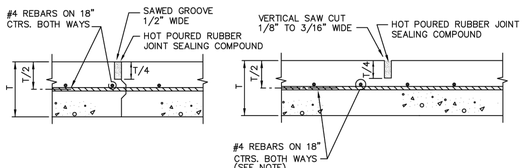


## KEYWAY JOINT

(FOR PAVEMENT THICKNESS > 6")

N.T.S.

## SAWED CONTRACTION JOINT

N.T.S.

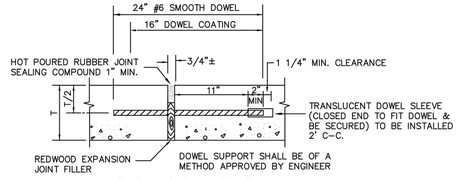


## EXPANSION JOINT

(SPACED 600 FT. MAXIMUM; LOCATE AT STRUCTURES AND AT INTERSECTION P.C.'S & P.T.'S)

N.T.S.

1. REINFORCEMENT SHALL BE NO. 3 FOR PAVEMENT THICKNESS 7" OR BELOW.
2. REINFORCEMENT SHALL BE NO. 4 FOR PAVEMENT THICKNESS 8" OR ABOVE.

| PAVEMENT JOINTS | | REPLACING N.C.T.C.O.G. DWG. NAME: | 2050 |
|---|---|---|---|
| PAVING | STREETS | SCALE: N.T.S. / DRAWN BY: BSJ / APPROVED BY: MOB | DATE: JULY 2020 / F.B. DWG. NAME: FB-P-250.DWG |

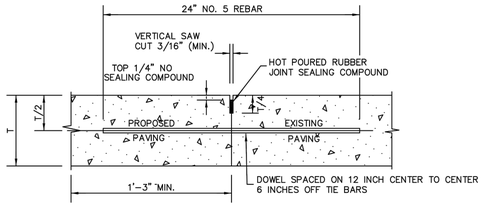


## LONGITUDINAL BUTT JOINT

NO SCALE

NOTE:
DOWEL BARS SHALL BE DRILLED INTO PAVEMENT HORIZONTALLY BY USE OF A MECHANICAL RIG.

| LONGITUDINAL BUTT JOINT | | REPLACING N.C.T.C.O.G. DWG. NAME: | 2050 |
|---|---|---|---|
| PAVING | STREETS | SCALE: N.T.S. / DRAWN BY: BSJ / APPROVED BY: MOB | DATE: AUG 2019 / F.B. DWG. NAME: FB-P-250B.DWG |

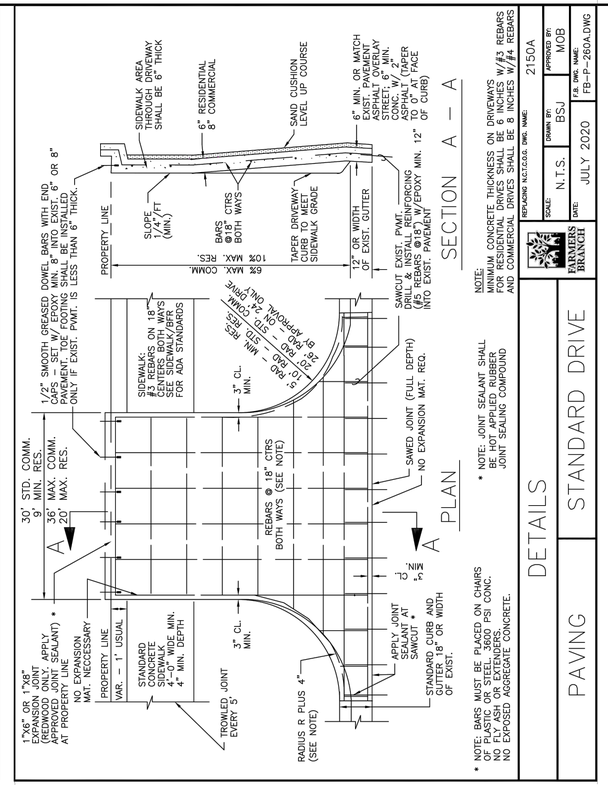


| DETAILS | | REPLACING N.C.T.C.O.G. DWG. NAME: | 2150A |
|---|---|---|---|
| PAVING | STANDARD DRIVE | SCALE: N.T.S. / DRAWN BY: BSJ / APPROVED BY: MOB | DATE: JULY 2020 / F.B. DWG. NAME: FB-P-260A.DWG |

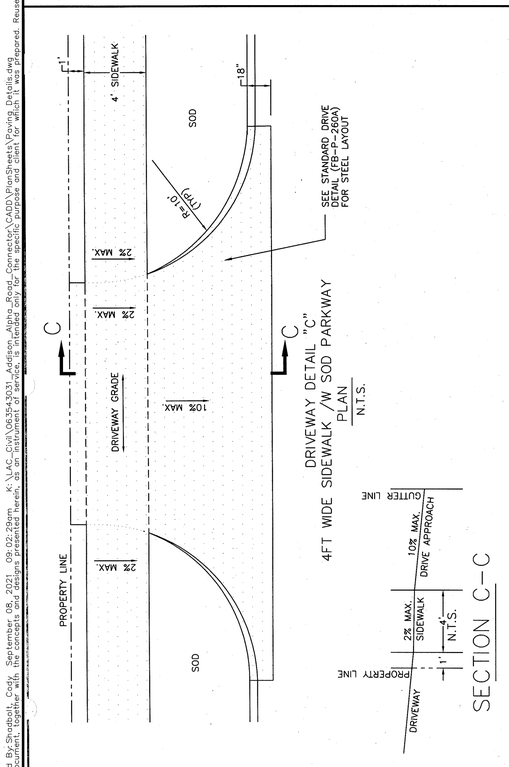


| DRIVE: @ SIDEWALK AWAY FROM CURB TYPE C | | REPLACING N.C.T.C.O.G. DWG. NAME: | |
|---|---|---|---|
| PAVING | SIDEWALK | SCALE: N.T.S. / DRAWN BY: BSJ / APPROVED BY: JVM | DATE: August 2008 / F.B. DWG. NAME: FB-P-280C.DWG |

SIDEWALK NOTES:

1. CONCRETE SHALL BE 3600 PSI @ 28 DAYS;
2. REINFORCEMENT SHALL BE #3 BARS ON 18 INCH CENTERS, ON CHAIRS OR STEEL POSTS (NO WELDED WIRE FABRIC WILL BE ACCEPTABLE AS A SUBSTITUE FOR STEEL BARS);
3. FINISH OF THE TOP SURFACE SHALL BE "LIGHT BROOM FINISH" WITH SCORED TOOL JOINTS.
4. SLOPE OF WALK SHALL BE 2% MAX. OR APPROVED BY THE CITY ENGINEER.
5. MIN. CONCRETE THICKNESS ON SIDEWALK SHALL BE 4 INCHES. MIN. CONCRETE THICKNESS ON BARRIER FREE RAMP PAY LIMIT AREA SHALL BE 6 INCHES.
6. INSTALL REDWOOD EXPANSION JOINTS @ 40' O.C. ON SIDEWALKS
7. IF AN ACCESSIBLE ROUTE HAS LESS THAN 60 IN. (1525 MM) CLEAR WIDTH THEN PASSING SPACES AT LEAST 60 IN BY 60 IN (1525 MM BY 1525 MM) SHALL BE LOCATED AT REASONABLE INTERVALS NOT TO EXCEED 200 FT (61 M).

| SIDEWALK NOTES | | REPLACING N.C.T.C.O.G. DWG. NAME: | |
|---|---|---|---|
| PAVING | SIDEWALK | SCALE: N.T.S. / DRAWN BY: BSJ / APPROVED BY: JVM | DATE: August 2008 / F.B. DWG. NAME: FB-P-310.DWG |

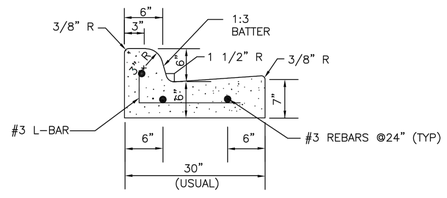


## SEPARATE CURB AND GUTTER

| SEPARATE CURB & GUTTER | | REPLACING N.C.T.C.O.G. DWG. NAME: | 2120 |
|---|---|---|---|
| PAVING | STREETS | SCALE: N.T.S. / DRAWN BY: BSJ / APPROVED BY: MOB | DATE: JULY 2020 / F.B. DWG. NAME: FB-P-250A.DWG |

Know what's **below.** **Call** before you dig.

| No. | REVISIONS | DATE | BY |
|---|---|---|---|
| | | | |

PROJECT NO. 2021-01C/ BID NO. 21-69

Kimley»Horn
2201 WEST ROYAL LANE, SUITE 275, IRVING, TX 75063
PHONE: 214-420-5600
WWW.KIMLEY-HORN.COM
© 2021 KIMLEY-HORN AND ASSOCIATES, INC.
TEXAS REGISTERED ENGINEERING FIRM #F-928

9/10/2021




| KHA PROJECT 063543031 | DATE 09/10/2021 | SCALE AS SHOWN | DESIGNED BY RMD |
|---|---|---|---|
| | | DRAWN BY CDS | CHECKED BY LNA |

**TOWN OF ADDISON**
ALPHA ROAD CONN.
FROM FARMERS BRANCH CREEK TO ALPHA ROAD

PAVING
STANDARD DETAILS
CITY OF FARMERS BRANCH

SHEET NUMBER
C3.22

Plotted By: Shadbolt, Cody September 08, 2021 09:02:28am K:\IAC_Civil\063543031_Addison_Alpha_Road_Connector\CADD\PlanSheets\Paving Details.dwg
This document, together with the concepts and designs presented herein, as an instrument of service, is intended only for the specific purpose and client for which it was prepared. Reuse of and improper reliance on this document without written authorization and adaptation by Kimley-Horn and Associates, Inc. shall be without liability to Kimley-Horn and Associates, Inc.

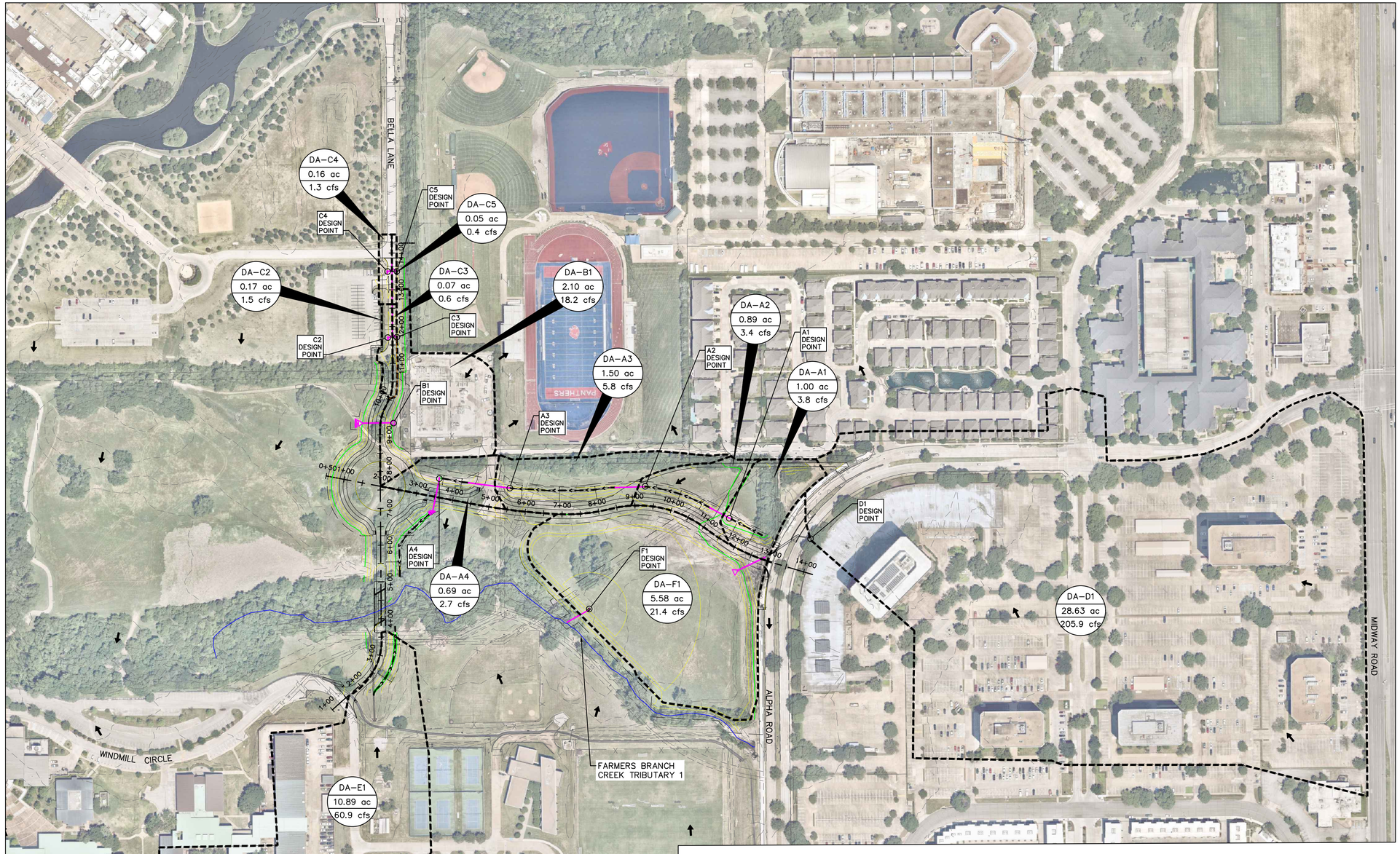


NORTH

GRAPHIC SCALE IN FEET
0 37.5 150 300

LEGEND

- # — DRAINAGE AREA NUMBER
- XX ac — DRAINAGE AREA SIZE (ACRES)
- XX cfs — 100-YEAR EXISTING RUNOFF FROM AREA (CFS)
- FLOW DIRECTION
- DRAINAGE AREA BOUNDARY

DRAINAGE AREA CALCULATIONS

| DRAINAGE AREA NO. | AREA (ac) | RUNOFF COEFFICIENT "C" | TIME OF CONCENTRATION (minutes) | RAINFALL INTENSITY "I"100 (in/hr) | TOTAL FLOW Q100 (cfs) | DESIGN/COLLECTION POINT |
|---|---|---|---|---|---|---|
| DA–A1 | 1.00 | 0.40 | 10.0 | 9.60 | 3.8 | DITCH TO STORM DRAIN |
| DA–A2 | 0.89 | 0.40 | 10.0 | 9.60 | 3.4 | DITCH TO STORM DRAIN |
| DA–A3 | 1.50 | 0.40 | 10.0 | 9.60 | 5.8 | DITCH TO STORM DRAIN |
| DA–A4 | 0.69 | 0.40 | 10.0 | 9.60 | 2.7 | STORM DRAIN |
| DA–B1 | 2.10 | 0.90 | 10.0 | 9.60 | 18.2 | STORM DRAIN |
| DA–C2 | 0.17 | 0.90 | 10.0 | 9.27 | 1.5 | CURB INLET |
| DA–C3 | 0.07 | 0.90 | 10.0 | 9.27 | 0.6 | CURB INLET |
| DA–C4 | 0.16 | 0.90 | 10.0 | 9.27 | 1.3 | STORM DRAIN |
| DA–C5 | 0.05 | 0.90 | 10.0 | 9.27 | 0.4 | STORM DRAIN |
| DA–D1 | 28.63 | 0.90 | 15.0 | 7.99 | 205.9 | STORM DRAIN |
| DA–E1 | 10.89 | 0.70 | 15.0 | 7.99 | 60.9 | DITCH |
| DA–F1 | 5.58 | 0.40 | 10.0 | 9.60 | 21.4 | POND OUTFALL |

NOTE:

- FLOWS FOR DRAINAGE AREAS LOCATED WITHIN FARMERS BRANCH ARE CALCULATED USING AN INTENSITY VALUE OF 9.60 IN/HR FOR A TIME OF CONCENTRATION OF 10 MINUTES AND 7.99 IN/HR FOR A TIME OF CONCENTRATION OF 15 MINUTES, PER THE CITY OF FARMERS BRANCH.
- FLOWS FOR DRAINAGE AREAS LOCATED WITHIN THE TOWN OF ADDISON ARE CALCULATED USING AN INTENSITY VALUE OF 9.27 IN/HR FOR A TIME OF CONCENTRATION OF 10 MINUTES PER THE TOWN OF ADDISON

811 Know what's below. Call before you dig.

| No. | REVISIONS | DATE | BY |
|---|---|---|---|

PROJECT NO. 2021-01C/ BID NO. 21-69

Kimley»Horn
2201 WEST ROYAL LANE, SUITE 275, IRVING, TX 75063
PHONE: 214-420-5600
WWW.KIMLEY-HORN.COM
© 2021 KIMLEY-HORN AND ASSOCIATES, INC.
TEXAS REGISTERED ENGINEERING FIRM #F-928

9/10/2021
STATE OF TEXAS
RYAN DELMOTTE
114242
LICENSED
PROFESSIONAL ENGINEER

| KHA PROJECT 063543031 | DATE 09/10/2021 |
|---|---|
| SCALE AS SHOWN | DESIGNED BY RMD |
| DRAWN BY CDS | CHECKED BY LNA |

# TOWN OF ADDISON
## ALPHA ROAD CONN. FROM FARMERS BRANCH CREEK TO ALPHA ROAD

## DRAINAGE
PROPOSED DRAINAGE AREA MAP

SHEET NUMBER
C4.01

Plotted By: Shettigh, Cody Sep 1 ember 08, 2021 - 09:03:06pm K:\IAC_Civil\063543031_Addison-Alpha_Road_Connection\CADD\Plan Sheets\Proj_Drainage Area Map.dwg
This document, together with the concepts and designs presented herein, as an instrument of service is intended only for the specific purpose and client for which it was prepared. Reuse of and improper reliance on this document without written authorization and adaptation by Kimley-Horn and Associates, Inc. shall be without liability to Kimley-Horn and Associates, Inc.

Plotted By-Shondahl, Cody Generated- 08, 2021 - 09:03:06pm K:\IrC_Civil\063543031 Addison-Alpha Road Connection\C400\Plan Sheets\Proj Drainage Area Map.dwg
This document, together with the concepts and designs presented herein, as an instrument of service is intended only for the specific purpose and client for which it was prepared. Reuse of and improper reliance on this document without written authorization and adaptation by Kimley-Horn and Associates, Inc. shall be without liability to Kimley-Horn and Associates, Inc.

## STORM DRAIN CALCULATION TABLE

### SYSTEM C

| From Sta | To Sta | Line Length | Drainage Area | | | Runoff Coefficient | Incr CxA | Total CxA | Time of Concentration | | | 100 Year Intensity | 100 Year Runoff (Q100) | Inlet Carryover (To Inlet) | Inlet Carryover (From Inlet) | "Qpipe" | Pipe Size Diameter | Box Size | | n | Sf | HGL | | Head Loss Calculations | | | | Ki | Ki*V^2/2g | Hk | Design HGL | Invert Elevations | | T/C Elev |
|---|---|---|---|---|---|---|---|---|---|---|---|---|---|---|---|---|---|---|---|---|---|---|---|---|---|---|---|---|---|---|---|---|
| | | | No. | Area | Total Area | | | | Inlet Time | Travel Time | Total Time | | | | | | | Width | Height | | | U/S | D/S | V1 (in) | V2 (out) | V1^2/2g | V2^2/2g | | | | | From | To | |
| (ft) | (ft) | (ft) | | (ac) | (ac) | (C) | | | (min) | (min) | (min) | (cfs) | (cfs) | (cfs) | (cfs) | (cfs) | (in) | (in) | (in) | (%) | (%) | (ft) | (ft) | (ft/s) | (ft/s) | (ft) | (ft) | | | | | (ft) | (ft) | |
| 1 | 2 | 3 | 4 | 5 | 6 | 7 | 8 | 9 | 10 | 11 | 12 | 13 | 14 | 15 | 16 | 17 | 18 | 19 | 20 | 21 | 22 | 23 | 24 | 25 | 26 | 27 | 28 | 29 | 30 | 31 | 32 | 33 | 34 | 35 |
| INSTALL: (1) 6' CURB INLET BELLA LANE STA 11+68.93, 11.44 RT | INSTALL: (1) 60' 18"x18" WYE BELLA LANE STA 11+75.25, 0.00 RT | 13.000 | C2 | 0.20 | 0.20 | 0.90 | 0.18 | 0.18 | 10.0 | 0.23 | 10.23 | 9.27 | 1.67 | 0.00 | 0.00 | 1.67 | 18 | - | - | 0.013 | 0.053 | 558.40 | 558.40 | 1.53 | 1.42 | 0.04 | 0.03 | 1.25 | 0.04 | 0.05 | 558.45 | 557.51 | 557.45 | 562.00 |
| INSTALL: (1) 60' 18"x18" WYE BELLA LANE STA 11+75.25, 0.00 RT | INSTALL: (1) 45° 18"X18" WYE BELLA LANE STA 11+60.37, 0.00' | 5.087 | - | - | 0.20 | - | - | 0.18 | 10.23 | 0.09 | 10.32 | 9.20 | 1.66 | - | - | 1.66 | 18 | - | - | 0.013 | 0.049 | 558.38 | 558.38 | 1.45 | 1.41 | 0.03 | 0.03 | 0.70 | 0.02 | 0.02 | 558.40 | 557.45 | 557.43 | - |
| INSTALL: (1) 6' CURB INLET BELLA LANE STA 11+68.93, 11.44 RT | INSTALL: (1) 45° 18"X18" WYE BELLA LANE STA 11+60.37, 0.00' | 16.175 | C3 | 0.07 | 0.07 | 0.90 | 0.06 | 0.06 | 10.0 | 0.82 | 10.82 | 9.27 | 0.58 | 0.00 | 0.00 | 0.58 | 18 | - | - | 0.013 | 0.000 | 558.00 | 558.38 | 2.52 | 0.51 | 0.10 | 0.10 | 1.25 | 0.13 | - | 558.00 | 557.72 | 557.45 | 562.00 |
| INSTALL: (1) 45° 18"X18" WYE BELLA LANE STA 11+60.37, 0.00' | INSTALL: (1) 60' 18"X18" WYE BELLA LANE STA 13+55.53, 0.00' | 175.166 | - | - | 0.27 | - | - | 0.24 | 10.82 | 2.30 | 13.12 | 9.03 | 2.19 | - | - | 2.19 | 18 | - | - | 0.013 | 0.070 | 558.33 | 558.24 | 1.98 | 1.24 | 0.06 | 0.02 | 0.75 | 0.02 | 0.05 | 558.38 | 557.43 | 556.73 | - |
| INSTALL: (1) 6' CURB INLET BELLA LANE STA 13+48.93, 11.44 L | INSTALL: (1) 60' 18"X18" WYE BELLA LANE STA 13+55.53, 0.00' | 13.207 | C4 | 0.16 | 0.16 | 0.90 | 0.14 | 0.14 | 10.0 | 0.29 | 10.29 | 9.27 | 1.34 | 0.00 | 0.00 | 1.34 | 18 | - | - | 0.013 | 0.030 | 558.23 | 558.24 | 1.31 | 0.76 | 0.03 | 0.01 | 1.25 | 0.01 | 0.03 | 558.27 | 557.39 | 556.73 | 562.00 |
| INSTALL: (1) 60' 18"X18" WYE BELLA LANE STA 13+48.93, 11.44 R | INSTALL: (1) 60' 18"X18" WYE BELLA LANE STA 13+60.37, 0.00' | 4.833 | - | - | 0.43 | - | - | 0.39 | 13.12 | 0.04 | 13.16 | 8.42 | 3.26 | - | - | 3.26 | 18 | - | - | 0.013 | 0.093 | 558.22 | 558.22 | 1.85 | 1.84 | 0.05 | 0.05 | 0.43 | 0.02 | 0.02 | 558.24 | 556.73 | 556.71 | - |
| INSTALL: (1) 6' CURB INLET BELLA LANE STA 13+48.93, 11.44 R | INSTALL: (1) 60' 18"X18" WYE BELLA LANE STA 13+60.37, 0.00' | 16.175 | C5 | 0.05 | 0.05 | 0.90 | 0.05 | 0.05 | 10.0 | 1.14 | 11.14 | 9.27 | 0.42 | 0.00 | 0.00 | 0.42 | 18 | - | - | 0.013 | 0.000 | 557.63 | 558.22 | 2.31 | 0.24 | 0.08 | 0.08 | 0.43 | 0.03 | - | 557.63 | 557.39 | 556.73 | 562.00 |
| INSTALL: (1) 60' 18"X18" WYE BELLA LANE STA 13+60.37, 0.00' | CONNECT TO EX 18" BY OTHERS | 16.083 | - | - | 0.48 | - | - | 0.43 | 13.16 | 0.12 | 13.28 | 8.41 | 3.63 | - | - | 3.63 | 18 | - | - | 0.013 | 0.113 | 558.17 | 558.15 | 2.07 | 2.06 | 0.07 | 0.07 | 0.75 | 0.05 | 0.05 | 558.22 | 556.71 | 556.65 | - |

### INLET CALCULATIONS - SYSTEM C

| Inlet ID | Location | Street | Area (acres) | Q100 (cfs) | CO (Carryover) (cfs) | Qa (cfs) | x-slope | z | n | s ft/ft | y (depth of flow) (ft) | Width Conveying Flow | La (ft) | Qi (Sag) (Intercepted) (cfs) | Qa-Qi (cfs) |
|---|---|---|---|---|---|---|---|---|---|---|---|---|---|---|---|
| 2 | Sag | Bella Lane | 0.17 | 1.42 | 0.00 | 1.42 | 0.02 | 50.00 | 0.0175 | 0.007 | 0.18 | 9.09 | 6.00 | 1.42 | 0.00 |
| 3 | Sag | Bella Lane | 0.07 | 0.58 | 0.00 | 0.58 | 0.02 | 50.00 | 0.0175 | 0.007 | 0.13 | 6.51 | 6.00 | 0.86 | 0.00 |
| 4 | Sag | Bella Lane | 0.16 | 1.33 | 0.00 | 1.33 | 0.02 | 50.00 | 0.0175 | 0.007 | 0.18 | 8.88 | 6.00 | 1.37 | 0.00 |
| 5 | Sag | Bella Lane | 0.05 | 0.42 | 0.00 | 0.42 | 0.02 | 50.00 | 0.0175 | 0.007 | 0.11 | 5.74 | 6.00 | 0.71 | 0.00 |

Know what's **below.**
**Call** before you dig.

| No. | REVISIONS | DATE | BY |
|---|---|---|---|

PROJECT NO. 2021-01C/ BID NO. 21-69

Kimley»Horn
2201 WEST ROYAL LANE, SUITE 275, IRVING, TX 75063
PHONE: 214-420-5600
WWW.KIMLEY-HORN.COM
© 2021 KIMLEY-HORN AND ASSOCIATES, INC.
TEXAS REGISTERED ENGINEERING FIRM #F-928

9/10/2021

STATE OF TEXAS
RYAN DELMOTTE
114242
LICENSED
PROFESSIONAL ENGINEER

KHA PROJECT 063543031
DATE 09/10/2021
SCALE AS SHOWN
DESIGNED BY RMD
DRAWN BY CDS
CHECKED BY LNA

**TOWN OF ADDISON**
ALPHA ROAD CONN.
FROM FARMERS BRANCH CREEK TO ALPHA ROAD

DRAINAGE
DRAINAGE CALCULATIONS

SHEET NUMBER
C4.02

Printed By:Shyndahl, Cody Sent:Friday, 08, 2021 09:03:06pm K:\AC_Civil\063543031_Addison_Alpha_Road_Connection\C4003\Plan Sheets\Proj. Portfolio_Area Map.dwg
This document, together with the concepts and designs presented herein, as an instrument of service, is intended only for the specific purpose and client for which it was prepared. Reuse of and improper reliance on this document without written authorization and adaptation by Kimley-Horn and Associates, Inc. shall be without liability to Kimley-Horn and Associates, Inc.

### Rating Curve Plot for Crossing: Crossing 1

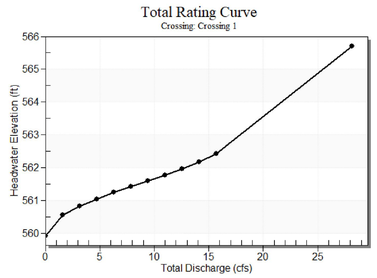


### Table 1 - Culvert Summary Table: Culvert 1

| Total Discharge (cfs) | Culvert Discharge (cfs) | Headwater Elevation (ft) | Inlet Control Depth (ft) | Outlet Control Depth (ft) | Flow Type | Normal Depth (ft) | Critical Depth (ft) | Outlet Depth (ft) | Tailwater Depth (ft) | Outlet Velocity (ft/s) | Tailwater Velocity (ft/s) |
|---|---|---|---|---|---|---|---|---|---|---|---|
| 0.00 | 0.00 | 559.94 | 0.000 | 0.000 | 0-NF | 0.000 | 0.000 | 0.000 | 0.000 | 0.000 | 0.000 |
| 1.57 | 1.57 | 560.55 | 0.615 | 0.0* | 1-S2 | 0.372 | 0.431 | 0.372 | 0.231 | 3.904 | 1.382 |
| 3.14 | 3.14 | 560.83 | 0.888 | 0.0* | 1-S2 | 0.526 | 0.616 | 0.526 | 0.340 | 4.744 | 1.722 |
| 4.71 | 4.71 | 561.05 | 1.112 | 0.186 | 1-S2 | 0.647 | 0.761 | 0.655 | 0.424 | 5.246 | 1.948 |
| 6.28 | 6.28 | 561.25 | 1.307 | 0.385 | 1-S2 | 0.758 | 0.887 | 0.758 | 0.495 | 5.769 | 2.122 |
| 7.85 | 7.85 | 561.42 | 1.483 | 0.590 | 1-S2 | 0.856 | 0.997 | 0.856 | 0.557 | 6.109 | 2.263 |
| 9.42 | 9.42 | 561.60 | 1.655 | 0.802 | 1-S2 | 0.951 | 1.093 | 0.956 | 0.612 | 6.359 | 2.385 |
| 10.99 | 10.99 | 561.77 | 1.834 | 1.030 | 1-S2 | 1.041 | 1.185 | 1.041 | 0.663 | 6.649 | 2.491 |
| 12.56 | 12.56 | 561.97 | 2.028 | 1.275 | 1-S2 | 1.131 | 1.272 | 1.131 | 0.710 | 6.854 | 2.586 |
| 14.13 | 14.13 | 562.18 | 2.244 | 1.532 | 1-S2 | 1.220 | 1.350 | 1.224 | 0.754 | 7.016 | 2.672 |
| 15.70 | 15.70 | 562.42 | 2.484 | 1.805 | 1-S2 | 1.312 | 1.424 | 1.312 | 0.795 | 7.178 | 2.751 |

### Water Surface Profile Plot for Culvert: Culvert 1

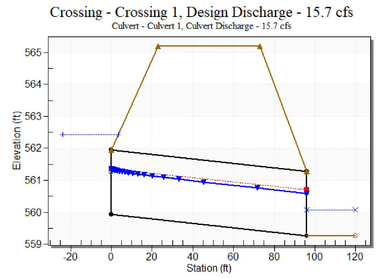


### Site Data - Culvert 1

Site Data Option: Culvert Invert Data
Inlet Station: 0.00 ft
Inlet Elevation: 559.94 ft
Outlet Station: 96.00 ft
Outlet Elevation: 559.27 ft
Number of Barrels: 1

### Culvert Data Summary - Culvert 1

Barrel Shape: Circular
Barrel Diameter: 2.00 ft
Barrel Material: Concrete
Embedment: 0.00 in
Barrel Manning's n: 0.0120
Culvert Type: Straight
Inlet Configuration: Mitered to Conform to Slope
Inlet Depression: NONE

Know what's **below.**
**Call** before you dig.

| No. | REVISIONS | DATE | BY |
|---|---|---|---|

PROJECT NO. 2021-01C/ BID NO. 21-69

Kimley»Horn
2201 WEST ROYAL LANE, SUITE 275, IRVING, TX 75063
PHONE: 214-420-5600
WWW.KIMLEY-HORN.COM
© 2021 KIMLEY-HORN AND ASSOCIATES, INC.
TEXAS REGISTERED ENGINEERING FIRM #F-928

9/10/2021
STATE OF TEXAS
RYAN DELMOTTE
114242
LICENSED
PROFESSIONAL ENGINEER

| KHA PROJECT 063543031 | DATE 09/10/2021 | SCALE AS SHOWN | DESIGNED BY RMD | DRAWN BY CDS | CHECKED BY LNA |
|---|---|---|---|---|---|

**TOWN OF ADDISON**
ALPHA ROAD CONN.
FROM FARMERS BRANCH
CREEK TO ALPHA ROAD

# DRAINAGE
CULVERT 1
CALCULATIONS

SHEET NUMBER
C4.03

## Rating Curve Plot for Crossing: Crossing 2

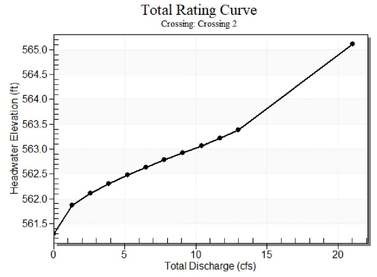


## Table 2 - Culvert Summary Table: Culvert 2

| Total Discharge (cfs) | Culvert Discharge (cfs) | Headwater Elevation (ft) | Inlet Control Depth (ft) | Outlet Control Depth (ft) | Flow Type | Normal Depth (ft) | Critical Depth (ft) | Outlet Depth (ft) | Tailwater Depth (ft) | Outlet Velocity (ft/s) | Tailwater Velocity (ft/s) |
|---|---|---|---|---|---|---|---|---|---|---|---|
| 0.00 | 0.00 | 561.30 | 0.000 | 0.000 | 0-NF | 0.000 | 0.000 | 0.000 | 0.000 | 0.000 | 0.000 |
| 1.30 | 1.30 | 561.87 | 0.565 | 0.0* | 1-S2 | 0.334 | 0.390 | 0.334 | 0.207 | 3.716 | 1.298 |
| 2.60 | 2.60 | 562.11 | 0.807 | 0.0* | 1-S2 | 0.473 | 0.558 | 0.482 | 0.306 | 4.428 | 1.624 |
| 3.90 | 3.90 | 562.30 | 0.999 | 0.0* | 1-S2 | 0.586 | 0.688 | 0.591 | 0.383 | 5.058 | 1.841 |
| 5.20 | 5.20 | 562.48 | 1.176 | 0.124 | 1-S2 | 0.682 | 0.800 | 0.686 | 0.448 | 5.445 | 2.007 |
| 6.50 | 6.50 | 562.63 | 1.333 | 0.296 | 1-S2 | 0.770 | 0.903 | 0.773 | 0.504 | 5.818 | 2.143 |
| 7.80 | 7.80 | 562.78 | 1.478 | 0.471 | 1-S2 | 0.851 | 0.994 | 0.851 | 0.555 | 6.112 | 2.259 |
| 9.10 | 9.10 | 562.92 | 1.620 | 0.652 | 1-S2 | 0.931 | 1.075 | 0.931 | 0.602 | 6.355 | 2.361 |
| 10.40 | 10.40 | 563.07 | 1.766 | 0.846 | 1-S2 | 1.005 | 1.152 | 1.005 | 0.645 | 6.575 | 2.452 |
| 11.70 | 11.70 | 563.22 | 1.920 | 1.048 | 1-S2 | 1.080 | 1.223 | 1.080 | 0.685 | 6.760 | 2.535 |
| 13.00 | 13.00 | 563.39 | 2.087 | 1.265 | 5-S2 | 1.154 | 1.294 | 1.154 | 0.723 | 6.928 | 2.611 |

## Water Surface Profile Plot for Culvert: Culvert 2

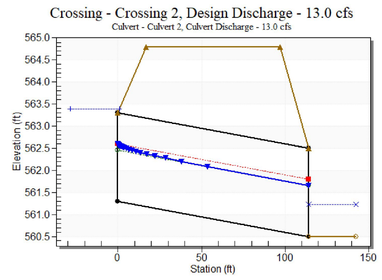


### Site Data - Culvert 2

Site Data Option: Culvert Invert Data
Inlet Station: 0.00 ft
Inlet Elevation: 561.30 ft
Outlet Station: 114.00 ft
Outlet Elevation: 560.50 ft
Number of Barrels: 1

### Culvert Data Summary - Culvert 2

Barrel Shape: Circular
Barrel Diameter: 2.00 ft
Barrel Material: Concrete
Embedment: 0.00 in
Barrel Manning's n: 0.0120
Culvert Type: Straight
Inlet Configuration: Mitered to Conform to Slope
Inlet Depression: NONE

811 Know what's below. Call before you dig.

| No. | REVISIONS | DATE | BY |
|---|---|---|---|

PROJECT NO. 2021-01C/ BID NO. 21-69


Kimley»Horn
2201 WEST ROYAL LANE, SUITE 275, IRVING, TX 75063
PHONE: 214-420-5600
WWW.KIMLEY-HORN.COM


© 2021 KIMLEY-HORN AND ASSOCIATES, INC.
TEXAS REGISTERED ENGINEERING FIRM #F-928


9/10/2021

STATE OF TEXAS
RYAN DELMOTTE
114242
LICENSED
PROFESSIONAL ENGINEER

KHA PROJECT 063543031
DATE 09/10/2021
SCALE AS SHOWN
DESIGNED BY RMD
DRAWN BY CDS
CHECKED BY LNA

**TOWN OF ADDISON**
ALPHA ROAD CONN.
FROM FARMERS BRANCH
CREEK TO ALPHA ROAD

DRAINAGE
CULVERT 2
CALCULATIONS

SHEET NUMBER
C4.04


Plotted By:Shadbolt, Cody September 08, 2021 09:03:10am K:\LAC_Civil\063543031_Addison_Alpha_Road_Connector\CADD\PlanSheets\Prop Drainage Area Map.dwg
This document, together with the concepts and designs presented herein, as an instrument of service, is intended only for the specific purpose and client for which it was prepared. Reuse of and improper reliance on this document without written authorization and adaptation by Kimley-Horn and Associates, Inc. shall be without liability to Kimley-Horn and Associates, Inc.

## Rating Curve Plot for Crossing: Crossing 3

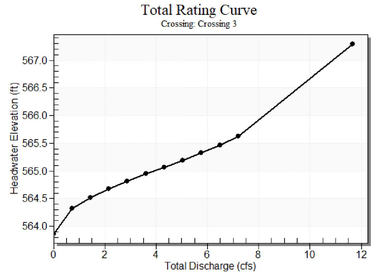


## Table 4 - Culvert Summary Table: Culvert 3

| Total Discharge (cfs) | Culvert Discharge (cfs) | Headwater Elevation (ft) | Inlet Control Depth (ft) | Outlet Control Depth (ft) | Flow Type | Normal Depth (ft) | Critical Depth (ft) | Outlet Depth (ft) | Tailwater Depth (ft) | Outlet Velocity (ft/s) | Tailwater Velocity (ft/s) |
|---|---|---|---|---|---|---|---|---|---|---|---|
| 0.00 | 0.00 | 563.87 | 0.000 | 0.000 | 0-NF | 0.000 | 0.000 | 0.000 | 0.000 | 0.000 | 0.000 |
| 0.72 | 0.72 | 564.33 | 0.457 | 0.0* | 1-S2 | 0.278 | 0.313 | 0.278 | 0.148 | 3.202 | 1.062 |
| 1.44 | 1.44 | 564.52 | 0.650 | 0.0* | 1-S2 | 0.392 | 0.448 | 0.392 | 0.220 | 3.901 | 1.343 |
| 2.16 | 2.16 | 564.68 | 0.806 | 0.067 | 1-S2 | 0.482 | 0.549 | 0.482 | 0.276 | 4.385 | 1.531 |
| 2.88 | 2.88 | 564.82 | 0.948 | 0.214 | 1-S2 | 0.565 | 0.644 | 0.565 | 0.324 | 4.739 | 1.676 |
| 3.60 | 3.60 | 564.94 | 1.074 | 0.363 | 1-S2 | 0.638 | 0.725 | 0.641 | 0.367 | 4.995 | 1.796 |
| 4.32 | 4.32 | 565.07 | 1.196 | 0.517 | 1-S2 | 0.708 | 0.796 | 0.712 | 0.405 | 5.233 | 1.899 |
| 5.04 | 5.04 | 565.19 | 1.320 | 0.678 | 1-S2 | 0.776 | 0.859 | 0.777 | 0.440 | 5.454 | 1.988 |
| 5.76 | 5.76 | 565.32 | 1.451 | 0.854 | 1-S2 | 0.842 | 0.922 | 0.842 | 0.473 | 5.637 | 2.068 |
| 6.48 | 6.48 | 565.47 | 1.596 | 1.042 | 5-S2 | 0.909 | 0.982 | 0.909 | 0.503 | 5.792 | 2.141 |
| 7.20 | 7.20 | 565.63 | 1.755 | 1.239 | 5-S2 | 0.976 | 1.036 | 0.976 | 0.532 | 5.909 | 2.207 |

## Water Surface Profile Plot for Culvert: Culvert 3

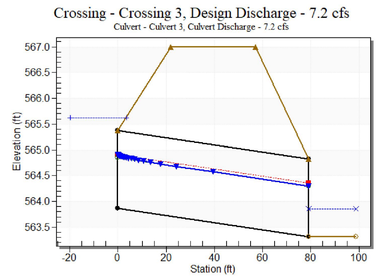


### Site Data - Culvert 3

Site Data Option: Culvert Invert Data
Inlet Station: 0.00 ft
Inlet Elevation: 563.87 ft
Outlet Station: 79.00 ft
Outlet Elevation: 563.32 ft
Number of Barrels: 1

### Culvert Data Summary - Culvert 3

Barrel Shape: Circular
Barrel Diameter: 1.50 ft
Barrel Material: Concrete
Embedment: 0.00 in
Barrel Manning's n: 0.0120
Culvert Type: Straight
Inlet Configuration: Mitered to Conform to Slope
Inlet Depression: NONE

811 Know what's below. Call before you dig.

| No. | REVISIONS | DATE | BY |
|---|---|---|---|

PROJECT NO. 2021-01C/ BID NO. 21-69


Kimley»Horn
2201 WEST ROYAL LANE, SUITE 275, IRVING, TX 75063
PHONE: 214-420-5600
WWW.KIMLEY-HORN.COM


© 2021 KIMLEY-HORN AND ASSOCIATES, INC.
TEXAS REGISTERED ENGINEERING FIRM #F-928


9/10/2021

STATE OF TEXAS
RYAN DELMOTTE
114242
LICENSED
PROFESSIONAL ENGINEER

KHA PROJECT 063543031
DATE 09/10/2021
SCALE AS SHOWN
DESIGNED BY RMD
DRAWN BY CDS
CHECKED BY LNA

**TOWN OF ADDISON**
ALPHA ROAD CONN.
FROM FARMERS BRANCH
CREEK TO ALPHA ROAD

DRAINAGE
CULVERT 3
CALCULATIONS

SHEET NUMBER
C4.05


Plotted By:Shadbolt, Cody September 08, 2021 09:03:11am K:\LAC_Civil\063543031_Addison_Alpha_Road_Connector\CADD\PlanSheets\Prop Drainage Area Map.dwg
This document, together with the concepts and designs presented herein, as an instrument of service, is intended only for the specific purpose and client for which it was prepared. Reuse of and improper reliance on this document without written authorization and adaptation by Kimley-Horn and Associates, Inc. shall be without liability to Kimley-Horn and Associates, Inc.

Plotted By: Shepherd, Cody September 08, 2021 09:03:13am K:\Ald_Civil\063543031_Addison-Alpha Road Connector\C400\ProjSheets\Proj Drainage Area Map.dwg
This document, together with the concepts and designs presented herein, as an instrument of service is intended only for the specific purpose and client for which it was prepared. Reuse of and improper reliance on this document without written authorization and adaptation by Kimley-Horn and Associates, Inc. shall be without liability to Kimley-Horn and Associates, Inc.

## Rating Curve Plot for Crossing: Crossing 4

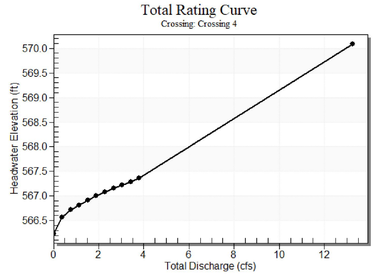


## Table 3 - Culvert Summary Table: Culvert 4

| Total Discharge (cfs) | Culvert Discharge (cfs) | Headwater Elevation (ft) | Inlet Control Depth (ft) | Outlet Control Depth (ft) | Flow Type | Normal Depth (ft) | Critical Depth (ft) | Outlet Depth (ft) | Tailwater Depth (ft) | Outlet Velocity (ft/s) | Tailwater Velocity (ft/s) |
|---|---|---|---|---|---|---|---|---|---|---|---|
| 0.00 | 0.00 | 566.24 | 0.000 | 0.000 | 0-NF | 0.000 | 0.000 | 0.000 | 0.000 | 0.000 | 0.000 |
| 0.38 | 0.38 | 566.56 | 0.322 | 0.0* | 1-S2 | 0.161 | 0.223 | 0.161 | 0.102 | 4.908 | 0.848 |
| 0.76 | 0.76 | 566.72 | 0.477 | 0.0* | 1-S2 | 0.227 | 0.318 | 0.227 | 0.152 | 4.397 | 1.083 |
| 1.14 | 1.14 | 566.82 | 0.577 | 0.0* | 1-S2 | 0.286 | 0.395 | 0.286 | 0.192 | 4.902 | 1.243 |
| 1.52 | 1.52 | 566.92 | 0.679 | 0.0* | 1-S2 | 0.326 | 0.457 | 0.326 | 0.227 | 5.310 | 1.367 |
| 1.90 | 1.90 | 567.00 | 0.758 | 0.0* | 1-S2 | 0.367 | 0.516 | 0.374 | 0.257 | 5.492 | 1.469 |
| 2.28 | 2.28 | 567.08 | 0.840 | 0.0* | 1-S2 | 0.407 | 0.566 | 0.407 | 0.285 | 5.879 | 1.558 |
| 2.66 | 2.66 | 567.18 | 0.915 | 0.0* | 1-S2 | 0.438 | 0.616 | 0.443 | 0.310 | 6.152 | 1.636 |
| 3.04 | 3.04 | 567.23 | 0.986 | 0.0* | 1-S2 | 0.469 | 0.663 | 0.477 | 0.334 | 6.260 | 1.705 |
| 3.42 | 3.42 | 567.29 | 1.052 | 0.0* | 1-S2 | 0.499 | 0.705 | 0.507 | 0.356 | 6.483 | 1.768 |
| 3.80 | 3.80 | 567.36 | 1.117 | 0.0* | 1-S2 | 0.530 | 0.745 | 0.537 | 0.378 | 6.689 | 1.826 |

## Water Surface Profile Plot for Culvert: Culvert 4

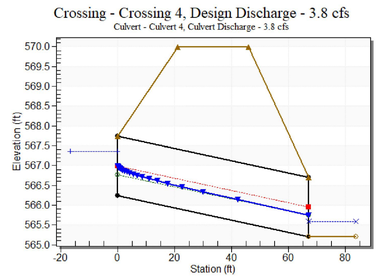


### Site Data - Culvert 4

Site Data Option: Culvert Invert Data
Inlet Station: 0.00 ft
Inlet Elevation: 566.24 ft
Outlet Station: 67.00 ft
Outlet Elevation: 565.21 ft
Number of Barrels: 1

### Culvert Data Summary - Culvert 4

Barrel Shape: Circular
Barrel Diameter: 1.50 ft
Barrel Material: Concrete
Embedment: 0.00 in
Barrel Manning's n: 0.0120
Culvert Type: Straight
Inlet Configuration: Mitered to Conform to Slope
Inlet Depression: NONE

811 Know what's **below.** **Call** before you dig.

| No. | REVISIONS | DATE | BY |
|---|---|---|---|

PROJECT NO. 2021-01C/ BID NO. 21-69

Kimley»Horn
2201 WEST ROYAL LANE, SUITE 275, IRVING, TX 75063
PHONE: 214-420-5600
WWW.KIMLEY-HORN.COM
© 2021 KIMLEY-HORN AND ASSOCIATES, INC.
TEXAS REGISTERED ENGINEERING FIRM #F-928

9/10/2021

STATE OF TEXAS
RYAN DELMOTTE
114242
LICENSED
PROFESSIONAL ENGINEER

| KHA PROJECT 063543031 | DATE 09/10/2021 | |
|---|---|---|
| SCALE | AS SHOWN | |
| DESIGNED BY | RMD | |
| DRAWN BY | CDS | |
| CHECKED BY | LNA | |

**TOWN OF ADDISON**
ALPHA ROAD CONN.
FROM FARMERS BRANCH
CREEK TO ALPHA ROAD

DRAINAGE
CULVERT 4
CALCULATIONS

SHEET NUMBER
C4.06

## Rating Curve Plot for Crossing: Culvert B

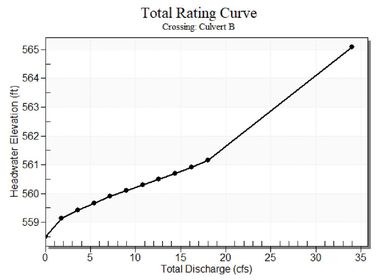


## Table 5 - Culvert Summary Table: Culvert B

| Total Discharge (cfs) | Culvert Discharge (cfs) | Headwater Elevation (ft) | Inlet Control Depth (ft) | Outlet Control Depth (ft) | Flow Type | Normal Depth (ft) | Critical Depth (ft) | Outlet Depth (ft) | Tailwater Depth (ft) | Outlet Velocity (ft/s) | Tailwater Velocity (ft/s) |
|---|---|---|---|---|---|---|---|---|---|---|---|
| 0.00 | 0.00 | 558.51 | 0.000 | 0.000 | 0-NF | 0.000 | 0.000 | 0.000 | 0.000 | 0.000 | 0.000 |
| 1.80 | 1.80 | 559.14 | 0.628 | 0.0* | 1-S2 | 0.372 | 0.462 | 0.372 | 0.134 | 4.484 | 1.001 |
| 3.60 | 3.60 | 559.42 | 0.909 | 0.0* | 1-S2 | 0.525 | 0.659 | 0.530 | 0.174 | 5.381 | 1.191 |
| 5.40 | 5.40 | 559.67 | 1.159 | 0.194 | 1-S2 | 0.646 | 0.817 | 0.656 | 0.202 | 6.005 | 1.318 |
| 7.20 | 7.20 | 559.90 | 1.386 | 0.413 | 1-S2 | 0.756 | 0.953 | 0.765 | 0.226 | 6.534 | 1.416 |
| 9.00 | 9.00 | 560.10 | 1.589 | 0.636 | 1-S2 | 0.854 | 1.069 | 0.867 | 0.245 | 6.892 | 1.497 |
| 10.80 | 10.80 | 560.29 | 1.782 | 0.873 | 1-S2 | 0.949 | 1.175 | 0.962 | 0.263 | 7.223 | 1.567 |
| 12.60 | 12.60 | 560.49 | 1.976 | 1.126 | 1-S2 | 1.039 | 1.274 | 1.053 | 0.278 | 7.513 | 1.628 |
| 14.40 | 14.40 | 560.69 | 2.179 | 1.394 | 5-S2 | 1.128 | 1.363 | 1.144 | 0.292 | 7.760 | 1.684 |
| 16.20 | 16.20 | 560.91 | 2.398 | 1.679 | 5-S2 | 1.217 | 1.446 | 1.233 | 0.306 | 7.976 | 1.734 |
| 18.00 | 18.00 | 561.15 | 2.638 | 2.222 | 5-S2 | 1.309 | 1.526 | 1.323 | 0.318 | 8.170 | 1.780 |

## Water Surface Profile Plot for Culvert: Culvert B

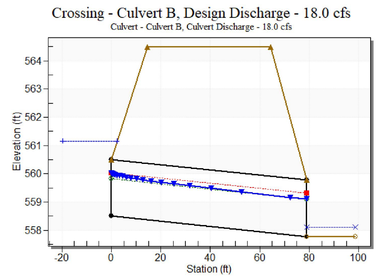


### Site Data - Culvert B

Site Data Option: Culvert Invert Data
Inlet Station: 0.00 ft
Inlet Elevation: 558.51 ft
Outlet Station: 79.00 ft
Outlet Elevation: 557.78 ft
Number of Barrels: 1

### Culvert Data Summary - Culvert B

Barrel Shape: Circular
Barrel Diameter: 2.00 ft
Barrel Material: Concrete
Embedment: 0.00 in
Barrel Manning's n: 0.0120
Culvert Type: Straight
Inlet Configuration: Square Edge with Headwall
Inlet Depression: NONE

Know what's below. Call before you dig.

| No. | REVISIONS | DATE | BY |
|---|---|---|---|

PROJECT NO. 2021-01C/ BID NO. 21-69


Kimley»Horn
2201 WEST ROYAL LANE, SUITE 275, IRVING, TX 75063
PHONE: 214-420-5600
WWW.KIMLEY-HORN.COM


© 2021 KIMLEY-HORN AND ASSOCIATES, INC.
TEXAS REGISTERED ENGINEERING FIRM #F-928


9/10/2021

STATE OF TEXAS
RYAN DELMOTTE
114242
LICENSED
PROFESSIONAL ENGINEER

KHA PROJECT 063543031
DATE 09/10/2021
SCALE AS SHOWN
DESIGNED BY RMD
DRAWN BY CDS
CHECKED BY LNA

**TOWN OF ADDISON**
ALPHA ROAD CONN.
FROM FARMERS BRANCH
CREEK TO ALPHA ROAD

DRAINAGE
CULVERT B
CALCULATIONS

SHEET NUMBER
C4.07


Plotted By:Shadbolt, Cody September 08, 2021 09:03:16am K:\LAC_Civil\063543031_Addison_Alpha_Road_Connector\CADD\PlanSheets\Prop Drainage Area Map.dwg
This document, together with the concepts and designs presented herein, as an instrument of service, is intended only for the specific purpose and client for which it was prepared. Reuse of and improper reliance on this document without written authorization and adaptation by Kimley-Horn and Associates, Inc. shall be without liability to Kimley-Horn and Associates, Inc.

Plotted By:Shadbolt, Cody September 08, 2021 09:03:50am K:\LAC_Civil\063543031_Addison_Alpha_Road_Connector\CADD\PlanSheets\Drainage Plan&Profile.dwg
This document, together with the concepts and designs presented herein, as an instrument of service, is intended only for the specific purpose and client for which it was prepared. Reuse of and improper reliance on this document without written authorization and adaptation by Kimley-Horn and Associates, Inc. shall be without liability to Kimley-Horn and Associates, Inc.

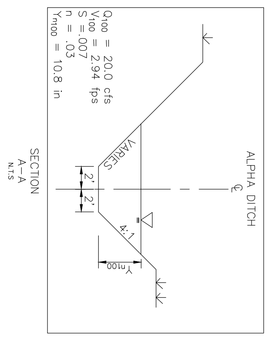


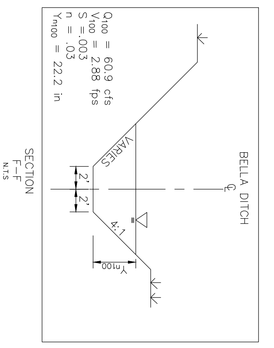


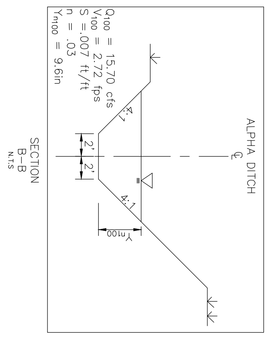


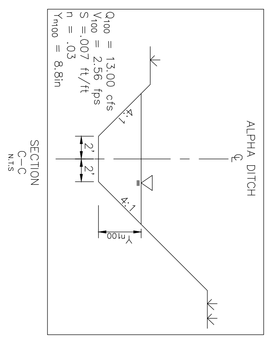


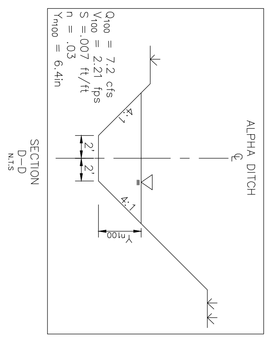


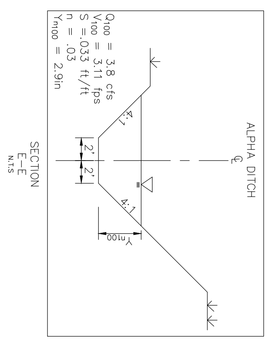


Know what's below.
Call before you dig.

811

C4.08
SHEET NUMBER

DRAINAGE
DITCH SECTIONS

**TOWN OF ADDISON**
ALPHA ROAD CONN.
FROM FARMERS BRANCH
CREEK TO ALPHA ROAD

| | |
|---|---|
| KHA PROJECT | 063543031 |
| DATE | 09/10/2021 |
| SCALE | AS SHOWN |
| DESIGNED BY | RMD |
| DRAWN BY | CDS |
| CHECKED BY | LNA |

STATE OF TEXAS
RYAN DELMOTTE
114242
LICENSED
PROFESSIONAL ENGINEER
9/10/2021

Kimley»Horn
2201 WEST ROYAL LANE, SUITE 275, IRVING, TX 75063
PHONE: 214-420-5600
WWW.KIMLEY-HORN.COM
© 2021 KIMLEY-HORN AND ASSOCIATES, INC.
TEXAS REGISTERED ENGINEERING FIRM #F-928

| No. | REVISIONS | DATE | BY |
|---|---|---|---|
| | | | |

PROJECT NO. 2021-01C/ BID NO. 21-69

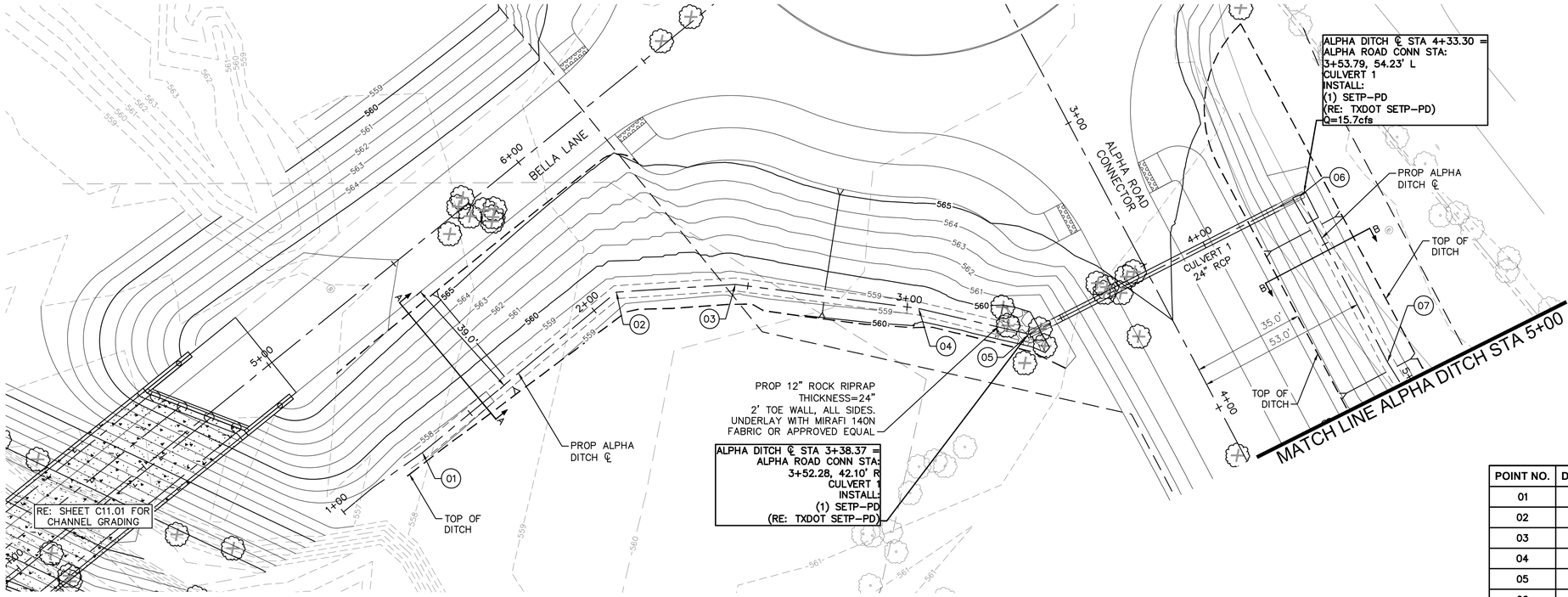


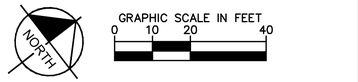


LEGEND

- EX ROW
- EX EASEMENT
- PROP EASEMENT
- PROP STORM DRAIN

| POINT NO. | DESCRIPTION | ALIGNMENT | STATION | OFFSET |
|---|---|---|---|---|
| 01 | PI | ALPHA ROAD CONN | 2+96.62 | 225.45' R |
| 02 | PI | ALPHA ROAD CONN | 2+80.70 | 148.85' R |
| 03 | PI | ALPHA ROAD CONN | 2+95.89 | 114.97' R |
| 04 | PI | ALPHA ROAD CONN | 3+29.14 | 68.15' R |
| 05 | PI | ALPHA ROAD CONN | 3+52.29 | 41.44' R |
| 06 | PI | ALPHA ROAD CONN | 3+53.77 | 52.95' L |
| 07 | PI | ALPHA ROAD CONN | 4+12.02 | 53.00' L |

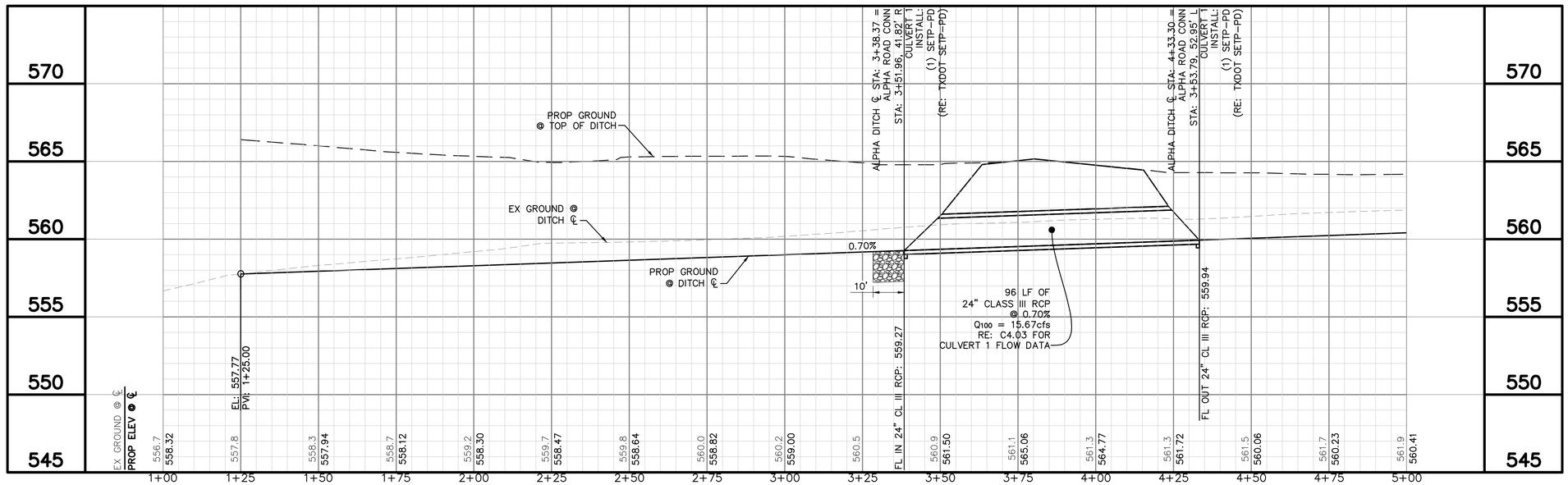


Know what's **below.** **Call** before you dig.


Kimley»Horn
2201 WEST ROYAL LANE, SUITE 275, IRVING, TX 75063
PHONE: 214-420-5600
WWW.KIMLEY-HORN.COM


© 2021 KIMLEY-HORN AND ASSOCIATES, INC.

TEXAS REGISTERED ENGINEERING FIRM #F-928

9/10/2021

STATE OF TEXAS
RYAN DELMOTTE
114242
LICENSED PROFESSIONAL ENGINEER

| No. | REVISIONS | DATE | BY |
|---|---|---|---|

PROJECT NO. 2021-01C/ BID NO. 21-69

KHA PROJECT 063543031
DATE 09/10/2021
SCALE AS SHOWN
DESIGNED BY RMD
DRAWN BY CDS
CHECKED BY LNA

**TOWN OF ADDISON**
ALPHA ROAD CONN.
FROM FARMERS BRANCH CREEK TO ALPHA ROAD

# DRAINAGE
ALPHA DITCH
BEGIN TO STA 5+00

SHEET NUMBER
C4.09


Plotted By: Ghatlett Date: September 09, 2021 01:37:17pm K:\ADC Civil\063543031 Addison Alpha Road Connector\CADD\Plan Sheets\Drainage Plan&Profile.dwg
This document, together with the concepts and designs presented herein, as an instrument of service, is intended only for the specific purpose and client for which it was prepared. Reuse of and improper reliance on this document without written authorization and adaptation by Kimley-Horn and Associates, Inc. shall be without liability to Kimley-Horn and Associates, Inc.

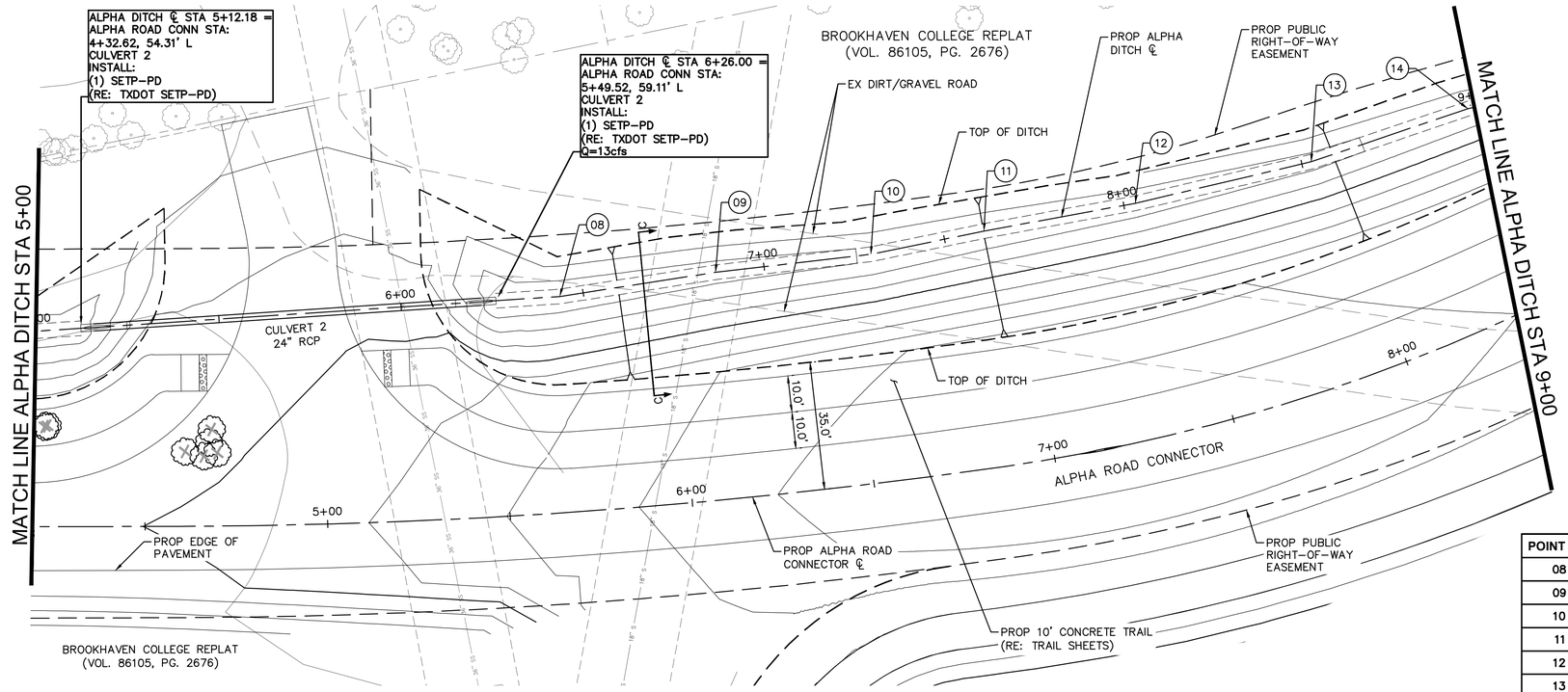


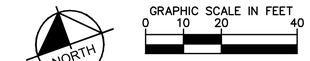


LEGEND

- EX ROW
- EX EASEMENT
- PROP EASEMENT
- PROP STORM DRAIN

| POINT NO. | DESCRIPTION | ALIGNMENT | STATION | OFFSET |
|---|---|---|---|---|
| 08 | PI | ALPHA ROAD CONN | 5+67.67 | 59.16' L |
| 09 | PI | ALPHA ROAD CONN | 6+12.38 | 62.22' L |
| 10 | PI | ALPHA ROAD CONN | 6+56.90 | 62.43' L |
| 11 | PI | ALPHA ROAD CONN | 6+90.00 | 64.58' L |
| 12 | PI | ALPHA ROAD CONN | 7+38.32 | 63.92' L |
| 13 | PI | ALPHA ROAD CONN | 7+94.70 | 60.45' L |
| 14 | PI | ALPHA ROAD CONN | 8+43.08 | 56.90' L |

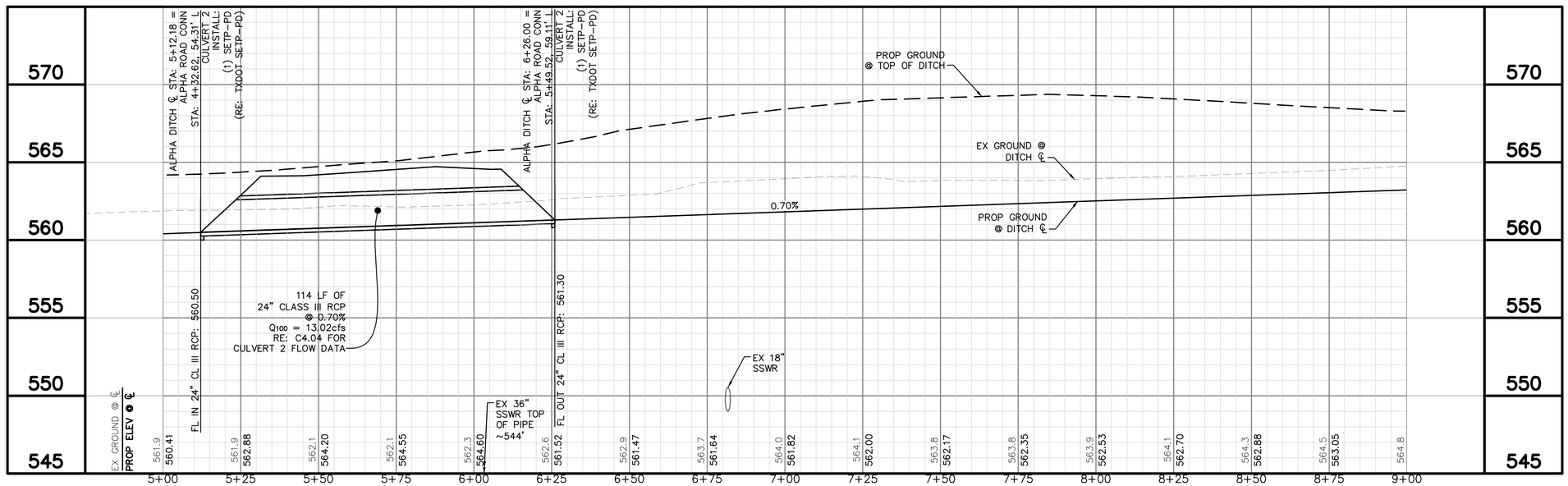


811 Know what's below. Call before you dig.

PROJECT NO. 2021-01C/ BID NO. 21-69

| No. | REVISIONS | DATE | BY |
|---|---|---|---|

Kimley»Horn
2201 WEST ROYAL LANE, SUITE 275, IRVING, TX 75063
PHONE: 214-420-5600
WWW.KIMLEY-HORN.COM
© 2021 KIMLEY-HORN AND ASSOCIATES, INC.
TEXAS REGISTERED ENGINEERING FIRM #F-928

9/10/2021
STATE OF TEXAS
RYAN DELMOTTE
114242
LICENSED
PROFESSIONAL ENGINEER

KHA PROJECT 063543031
DATE 09/10/2021
SCALE AS SHOWN
DESIGNED BY RMD
DRAWN BY CDS
CHECKED BY LNA

# TOWN OF ADDISON
ALPHA ROAD CONN.
FROM FARMERS BRANCH CREEK TO ALPHA ROAD

# DRAINAGE
ALPHA DITCH
STA 5+00 TO STA 9+00

SHEET NUMBER
C4.10

Plotted By:Shadbolt, Cody September 08, 2021 09:04:15am K:\LAC_Civil\063543031_Addison_Alpha_Road_Connector\CADD\PlanSheets\Drainage Plan&Profile.dwg
This document, together with the concepts and designs presented herein, as an instrument of service, is intended only for the specific purpose and client for which it was prepared. Reuse of and improper reliance on this document without written authorization and adaptation by Kimley-Horn and Associates, Inc. shall be without liability to Kimley-Horn and Associates, Inc.

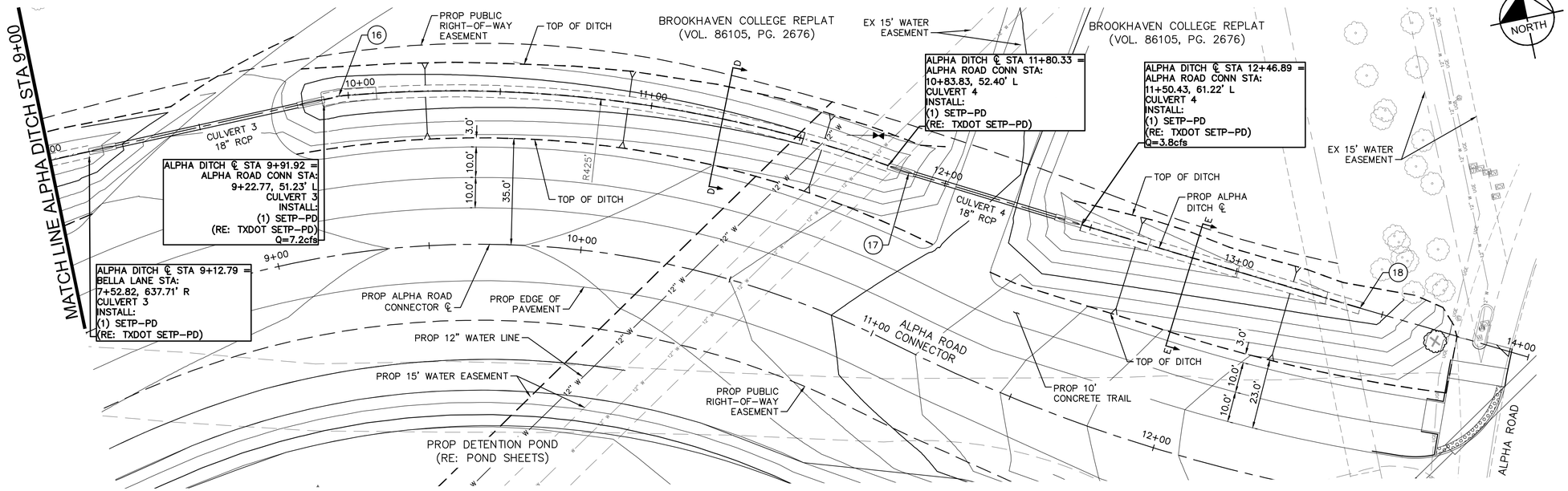


| POINT NO. | DESCRIPTION | ALIGNMENT | STATION | OFFSET |
|---|---|---|---|---|
| 16 | PC | ALPHA ROAD CONN | 9+26.98 | 51.79' L |
| 17 | PT | ALPHA ROAD CONN | 10+90.00 | 53.01' L |
| 18 | PI | ALPHA ROAD CONN | 12+58.10 | 61.13' L |

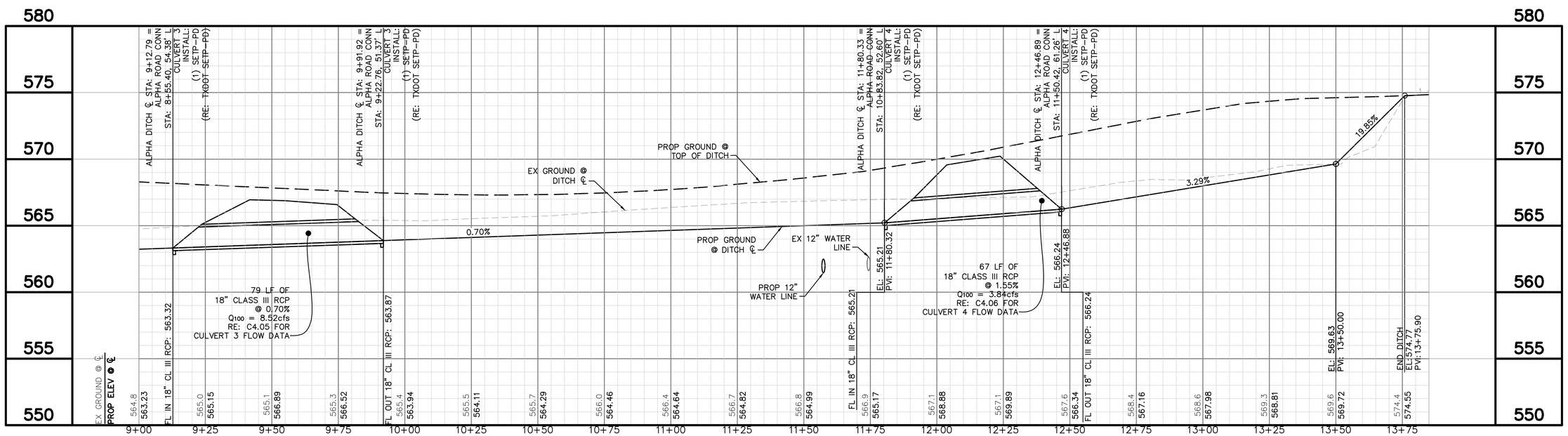


Know what's **below.** **Call** before you dig.

Kimley»Horn
2201 WEST ROYAL LANE, SUITE 275, IRVING, TX 75063
PHONE: 214-420-5600
WWW.KIMLEY-HORN.COM
© 2021 KIMLEY-HORN AND ASSOCIATES, INC.
TEXAS REGISTERED ENGINEERING FIRM #F-928

9/10/2021
STATE OF TEXAS
RYAN DELMOTTE
114242
LICENSED
PROFESSIONAL ENGINEER

PROJECT NO. 2021-01C/ BID NO. 21-69

| No. | REVISIONS | DATE | BY |
|---|---|---|---|

KHA PROJECT 063543031
DATE 09/10/2021
SCALE AS SHOWN
DESIGNED BY RMD
DRAWN BY CDS
CHECKED BY LNA

**TOWN OF ADDISON**
ALPHA ROAD CONN.
FROM FARMERS BRANCH CREEK TO ALPHA ROAD

DRAINAGE
ALPHA DITCH
STA 9+00 TO END

SHEET NUMBER
C4.11

Plotted By: Shettachi, Cody September 08, 2021 - 09:04:26pm K:\IVG_Civil\063543031 - Addison Alpha Road Connector\CAD\Pro-Sheets\Drainage Pro-Sheets\Pro-Sheet-Drainage
This document, together with the concepts and designs presented herein, as an instrument of service is intended only for the specific purpose and client for which it was prepared. Reuse of and improper reliance on this document without written authorization and adaptation by Kimley-Horn and Associates, Inc. shall be without liability to Kimley-Horn and Associates, Inc.

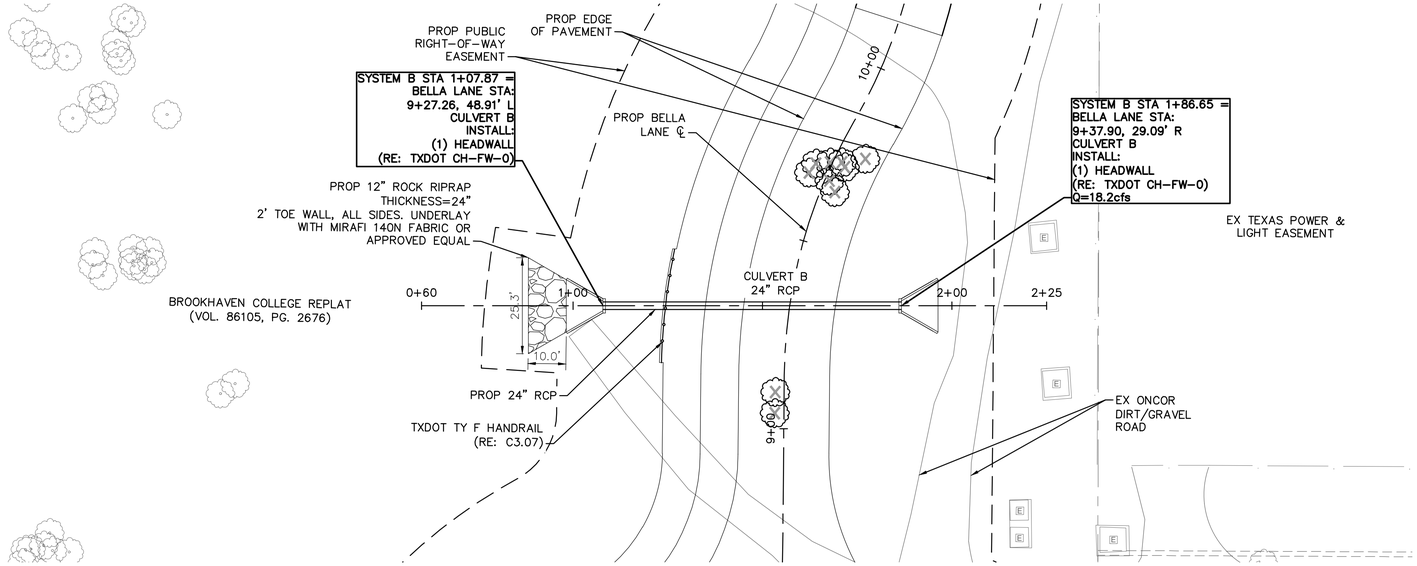


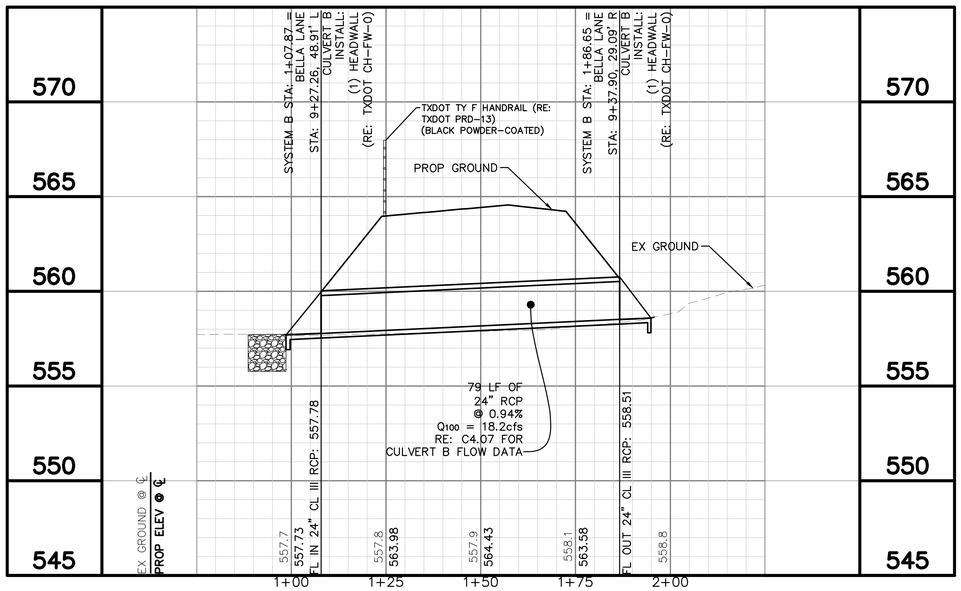


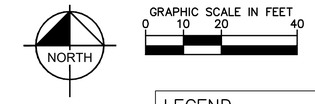


LEGEND

- EX ROW
- EX EASEMENT
- PROP EASEMENT
- PROP STORM DRAIN

Know what's below. Call before you dig.

| No. | REVISIONS | DATE | BY |
|---|---|---|---|

PROJECT NO. 2021-01C/ BID NO. 21-69


Kimley»Horn
2201 WEST ROYAL LANE, SUITE 275, IRVING, TX 75063
PHONE: 214-420-5600
WWW.KIMLEY-HORN.COM


© 2021 KIMLEY-HORN AND ASSOCIATES, INC.
TEXAS REGISTERED ENGINEERING FIRM #F-928


9/10/2021

STATE OF TEXAS
RYAN DELMOTTE
114242
LICENSED
PROFESSIONAL ENGINEER

KHA PROJECT 063543031
DATE 09/10/2021
SCALE AS SHOWN
DESIGNED BY RMD
DRAWN BY CDS
CHECKED BY LNA

# TOWN OF ADDISON
## ALPHA ROAD CONN. FROM FARMERS BRANCH CREEK TO ALPHA ROAD

## DRAINAGE
SYSTEM B
SHEET 1 OF 1

SHEET NUMBER
C4.12


Plotted By:Shadbolt, Cody September 09, 2021 01:37:21pm K:\LAC_Civil\063543031_Addison_Alpha_Road_Connector\CADD\PlanSheets\Drainage Plan&Profile.dwg
This document, together with the concepts and designs presented herein, as an instrument of service, is intended only for the specific purpose and client for which it was prepared. Reuse of and improper reliance on this document without written authorization and adaptation by Kimley-Horn and Associates, Inc. shall be without liability to Kimley-Horn and Associates, Inc.

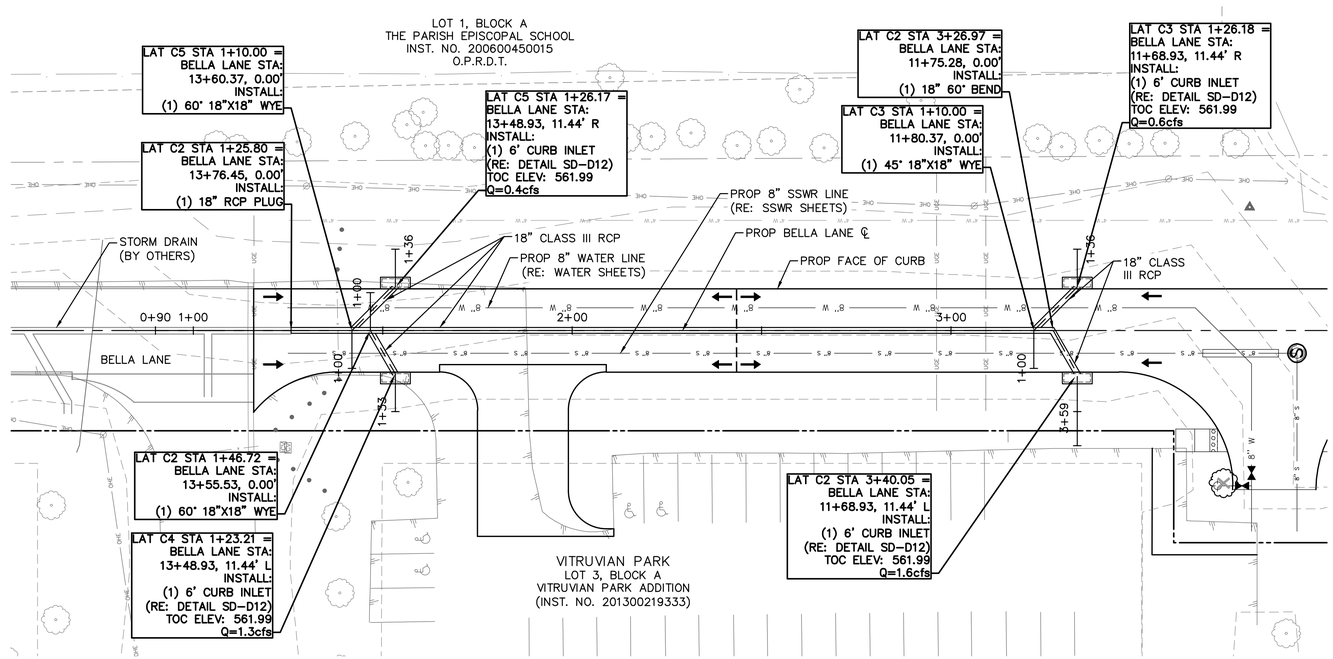


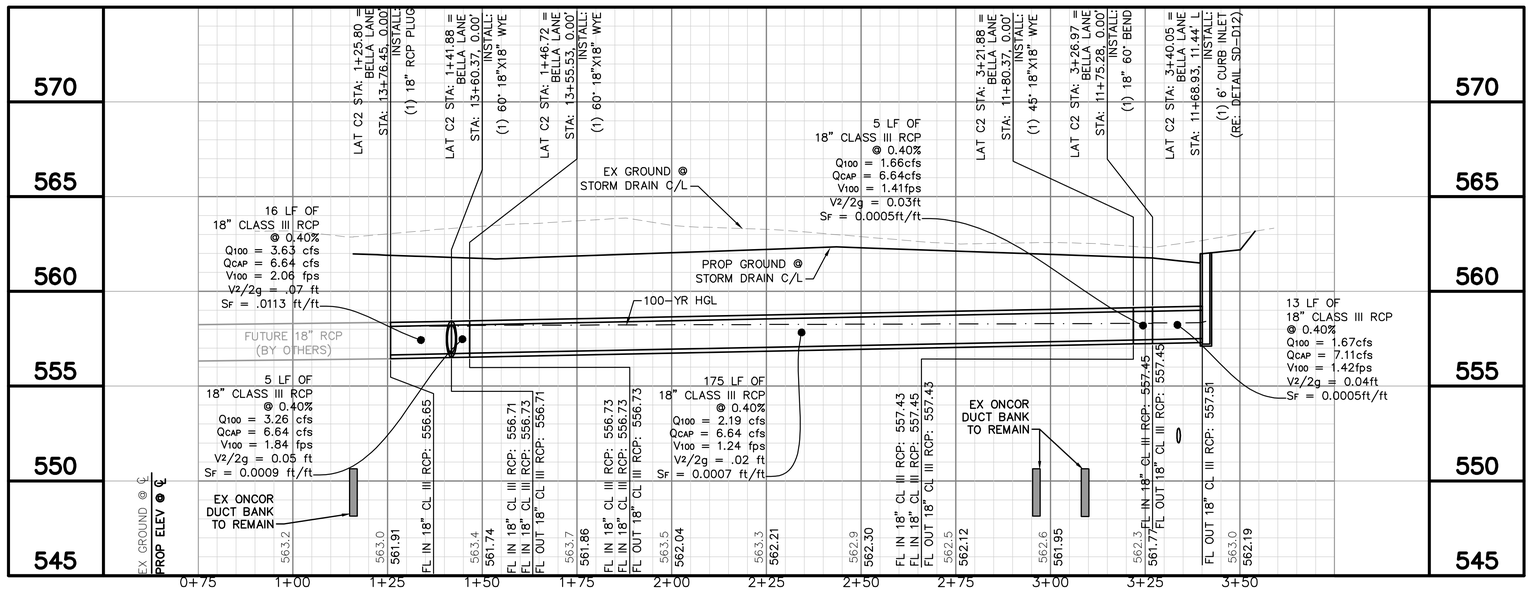





GRAPHIC SCALE IN FEET
0 10 20 40

LEGEND
- EX ROW
- EX EASEMENT
- PROP EASEMENT
- PROP STORM DRAIN

| No. | REVISIONS | DATE | BY |
|---|---|---|---|
| | | | |

PROJECT NO. 2021-01C/ BID NO. 21-69

Kimley»Horn
2201 WEST ROYAL LANE, SUITE 275, IRVING, TX 75063
PHONE: 214-420-5600
WWW.KIMLEY-HORN.COM
© 2021 KIMLEY-HORN AND ASSOCIATES, INC.
TEXAS REGISTERED ENGINEERING FIRM #F-928

9/10/2021

STATE OF TEXAS
RYAN DELMOTTE
114242
LICENSED
PROFESSIONAL ENGINEER

| KHA PROJECT 063543031 | | | |
|---|---|---|---|
| DATE 09/10/2021 | SCALE AS SHOWN | DESIGNED BY RMD | |
| | | DRAWN BY CDS | |
| | | CHECKED BY LNA | |

# TOWN OF ADDISON
## ALPHA ROAD CONN. FROM FARMERS BRANCH CREEK TO ALPHA ROAD

## DRAINAGE SYSTEM C

SHEET NUMBER
C4.13

811 Know what's below. Call before you dig.

Plotted By: Shettell, Cody September 08, 2021 09:04:42pm K:\NAC-Civil\063543031-Addison-Alpha Road Connect\C4D\Plan Sheets\Drainage Plan&Profile.dwg
This document, together with the concepts and designs presented herein, as an instrument of service is intended only for the specific purpose and client for which it was prepared. Reuse of and improper reliance on this document without written authorization and adaptation by Kimley-Horn and Associates, Inc. shall be without liability to Kimley-Horn and Associates, Inc.

Plotted By:Shadbolt, Cody September 08, 2021 09:41:06am K:\LAC_Civil\063543031_Addison_Alpha_Road_Connector\CADD\PlanSheets\Drainage Plan&Profile.dwg
This document, together with the concepts and designs presented herein, as an instrument of service, is intended only for the specific purpose and client for which it was prepared. Reuse of and improper reliance on this document without written authorization and adaptation by Kimley-Horn and Associates, Inc. shall be without liability to Kimley-Horn and Associates, Inc.

## LAT C3

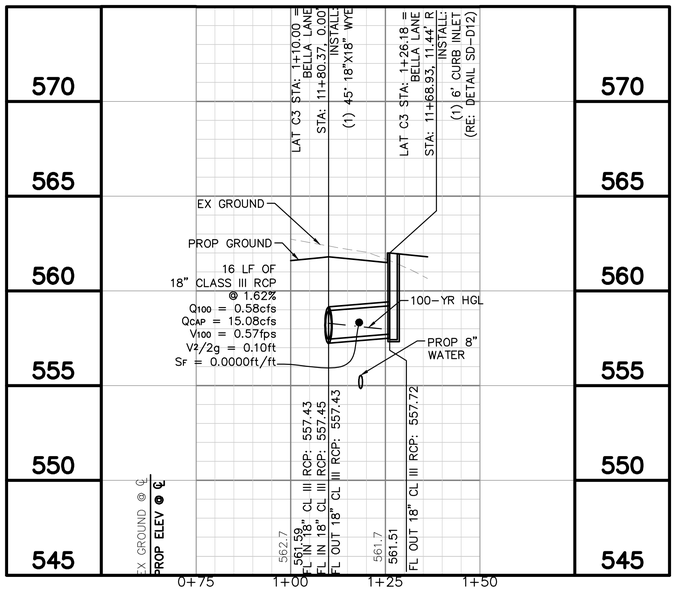


## LAT C4

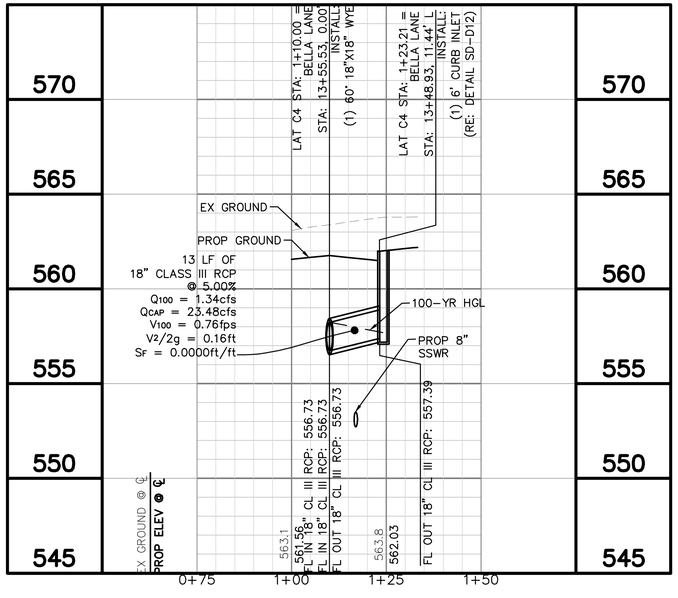


## LAT C5

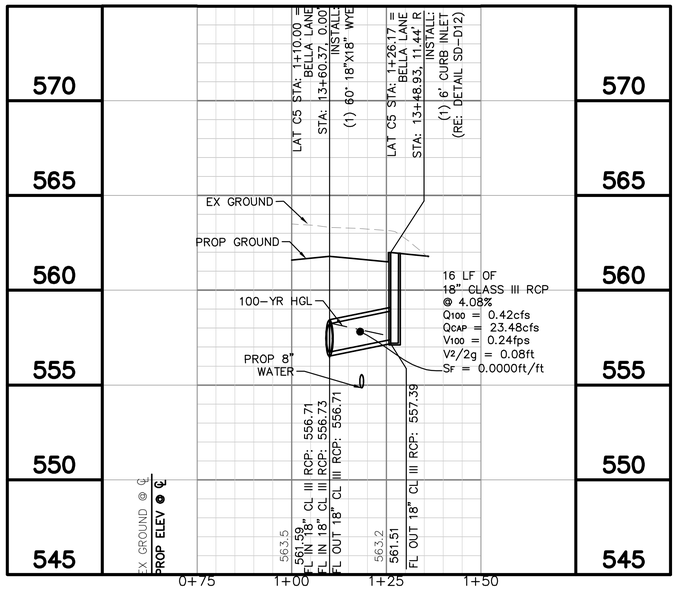


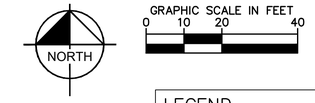


## LEGEND

- EX ROW
- EX EASEMENT
- PROP EASEMENT
- PROP STORM DRAIN

811
Know what's below.
Call before you dig.

| No. | REVISIONS | DATE | BY |
|---|---|---|---|

PROJECT NO. 2021-01C/ BID NO. 21-69

Kimley»Horn
2201 WEST ROYAL LANE, SUITE 275, IRVING, TX 75063
PHONE: 214-420-5600
WWW.KIMLEY-HORN.COM
© 2021 KIMLEY-HORN AND ASSOCIATES, INC.
TEXAS REGISTERED ENGINEERING FIRM #F-928

9/10/2021
STATE OF TEXAS
RYAN DELMOTTE
114242
LICENSED
PROFESSIONAL ENGINEER

KHA PROJECT 063543031
DATE 09/10/2021
SCALE AS SHOWN
DESIGNED BY RMD
DRAWN BY CDS
CHECKED BY LNA

# TOWN OF ADDISON
ALPHA ROAD CONN.
FROM FARMERS BRANCH
CREEK TO ALPHA ROAD

# DRAINAGE
SYSTEM C LATERALS
DRAINAGE

SHEET NUMBER
C4.14

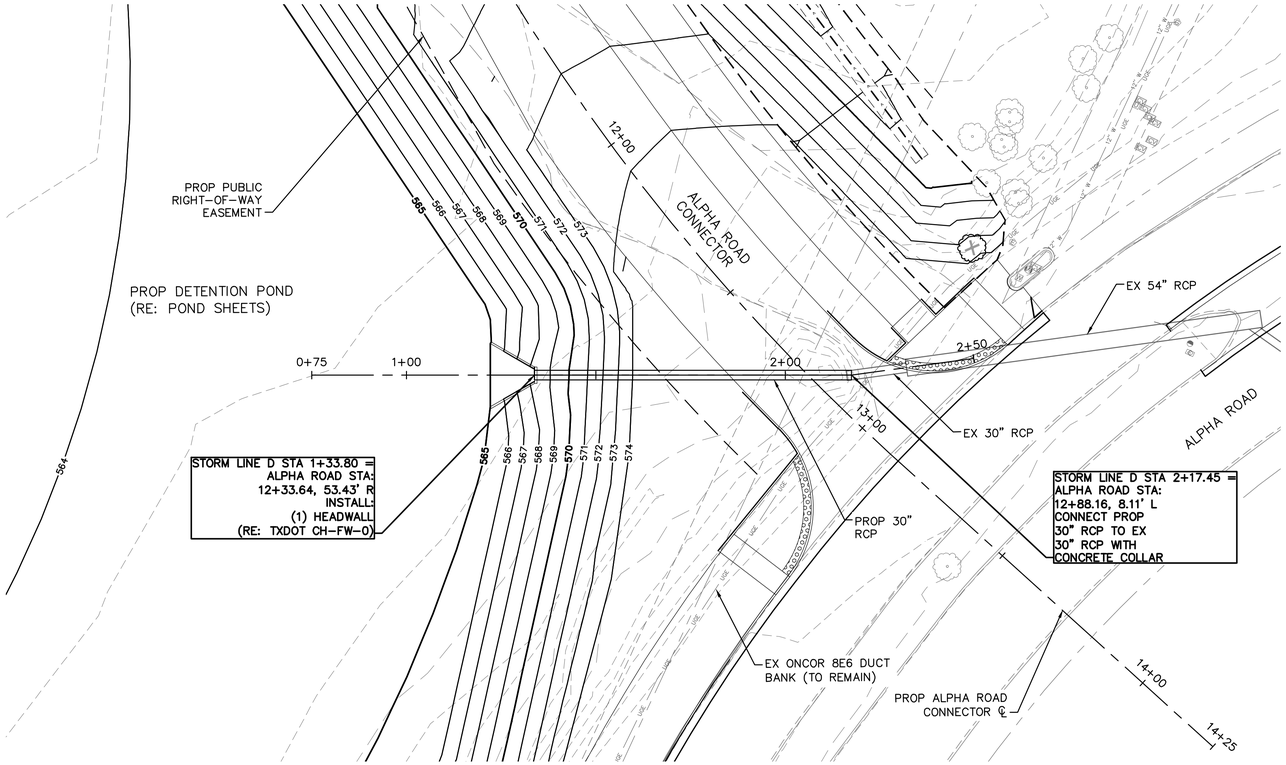


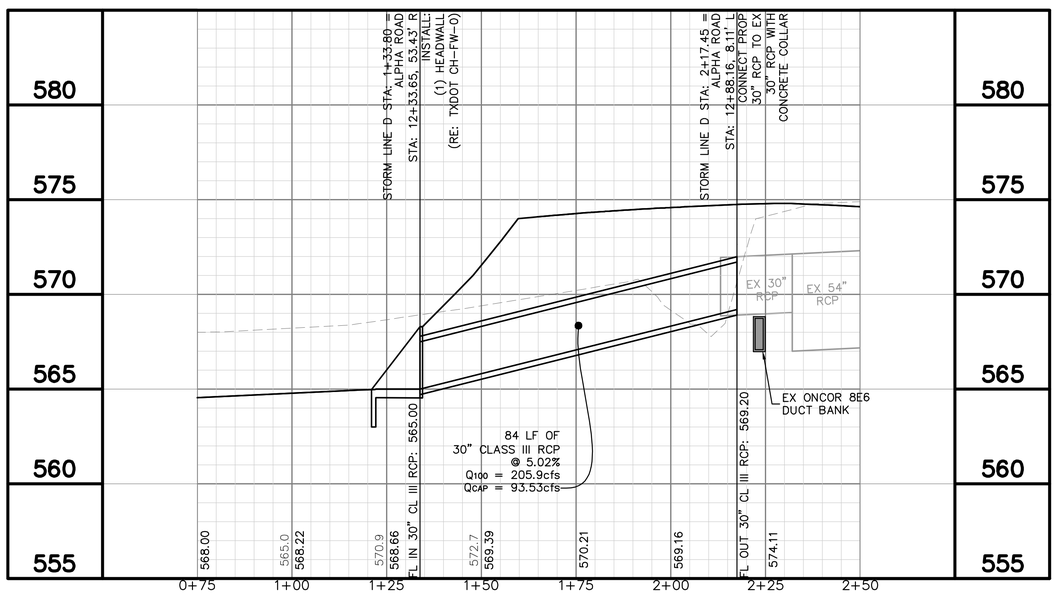


NORTH

GRAPHIC SCALE IN FEET
0 10 20 40

LEGEND
- EX ROW
- EX EASEMENT
- PROP EASEMENT
- PROP STORM DRAIN

Know what's below. Call before you dig.

| No. | REVISIONS | DATE | BY |
|---|---|---|---|

PROJECT NO. 2021-01C/ BID NO. 21-69


Kimley»Horn
2201 WEST ROYAL LANE, SUITE 275, IRVING, TX 75063
PHONE: 214-420-5600
WWW.KIMLEY-HORN.COM


© 2021 KIMLEY-HORN AND ASSOCIATES, INC.
TEXAS REGISTERED ENGINEERING FIRM #F-928


9/10/2021
STATE OF TEXAS
RYAN DELMOTTE
114242
LICENSED
PROFESSIONAL ENGINEER

KHA PROJECT 063543031
DATE 09/10/2021
SCALE AS SHOWN
DESIGNED BY RMD
DRAWN BY CDS
CHECKED BY LNA

# TOWN OF ADDISON
## ALPHA ROAD CONN. FROM FARMERS BRANCH CREEK TO ALPHA ROAD

## DRAINAGE SYSTEM D

SHEET NUMBER
C4.15


Plotted By:Shadbolt, Cody September 09, 2021 01:41:27pm K:\LAC_Civil\063543031_Addison_Alpha_Road_Connector\CADD\PlanSheets\Drainage Plan&Profile2.dwg
This document, together with the concepts and designs presented herein, as an instrument of service, is intended only for the specific purpose and client for which it was prepared. Reuse of and improper reliance on this document without written authorization and adaptation by Kimley-Horn and Associates, Inc. shall be without liability to Kimley-Horn and Associates, Inc.

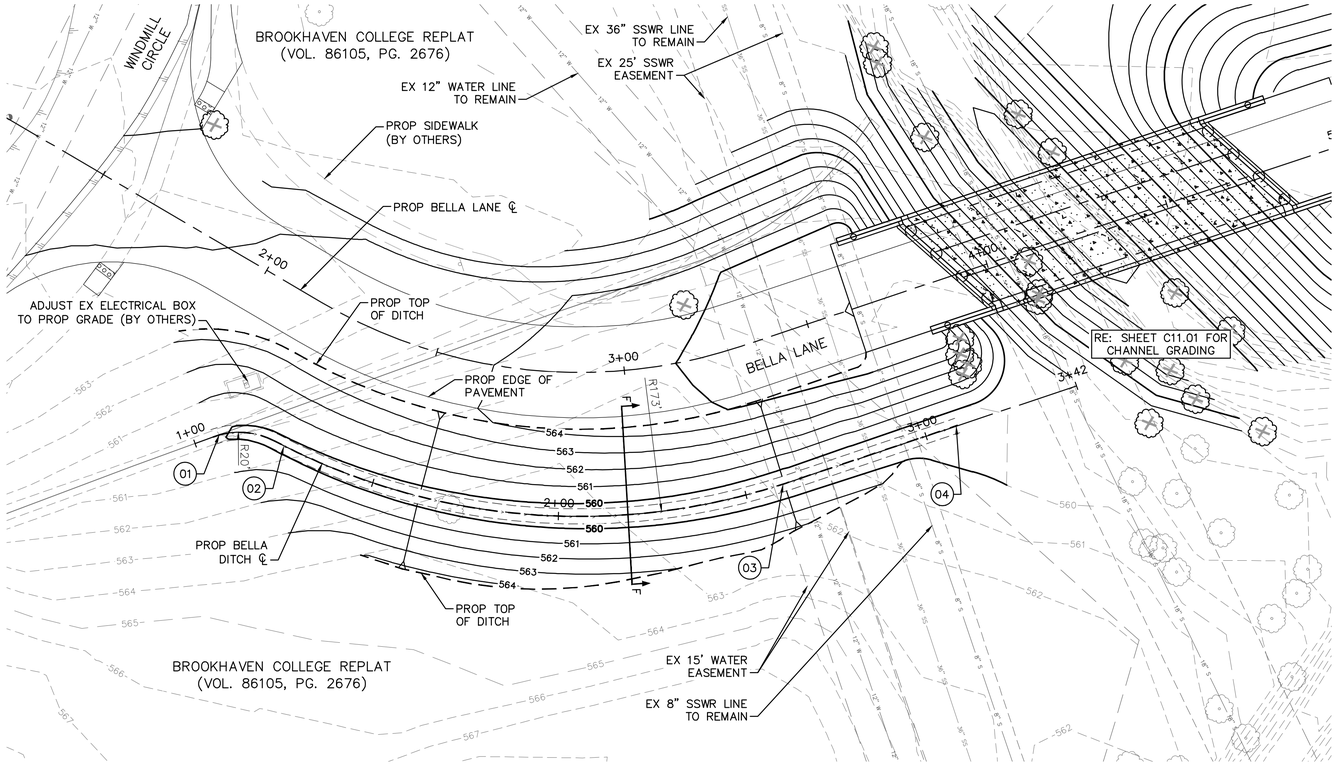


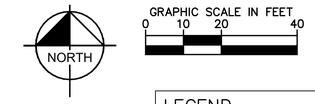


LEGEND

- EX ROW
- EX EASEMENT
- PROP EASEMENT

| POINT NO. | DESCRIPTION | ALIGNMENT | STATION | OFFSET | ELEV |
|---|---|---|---|---|---|
| 01 | BEGIN-PC | BELLA LANE EXT | 2+11.12 | 43.74' R | 560.02' |
| 02 | PRC | BELLA LANE EXT | 2+25.00 | 38.00' R | 559.95' |
| 03 | PT | BELLA LANE EXT | 3+30.85 | 38.00' R | 559.52' |
| 04 | END | BELLA LANE EXT | 3+78.78 | 38.00' R | 559.36' |

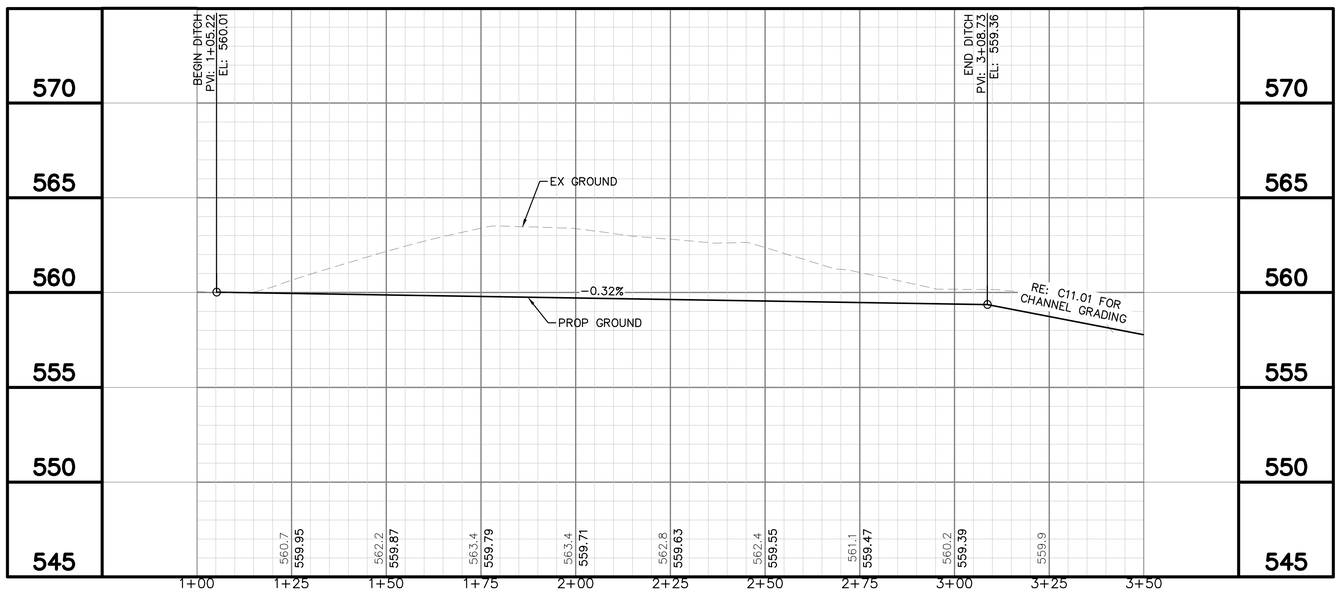


811 Know what's below. Call before you dig.

| No. | REVISIONS | DATE | BY |
|---|---|---|---|

PROJECT NO. 2021-01C/ BID NO. 21-69


Kimley»Horn
2201 WEST ROYAL LANE, SUITE 275, IRVING, TX 75063
PHONE: 214-420-5600
WWW.KIMLEY-HORN.COM


© 2021 KIMLEY-HORN AND ASSOCIATES, INC.
TEXAS REGISTERED ENGINEERING FIRM #F-928


9/10/2021

STATE OF TEXAS
RYAN DELMOTTE
114242
LICENSED
PROFESSIONAL ENGINEER

KHA PROJECT 063543031
DATE 09/10/2021
SCALE AS SHOWN
DESIGNED BY RMD
DRAWN BY CDS
CHECKED BY LNA

# TOWN OF ADDISON
ALPHA ROAD CONN.
FROM FARMERS BRANCH
CREEK TO ALPHA ROAD

## DRAINAGE
BELLA DITCH

SHEET NUMBER
C4.16


Plotted By:Shadbolt, Cody September 09, 2021 01:41:32pm K:\LAC_Civil\063543031_Addison_Alpha_Road_Connector\CADD\PlanSheets\Drainage Plan&Profile2.dwg
This document, together with the concepts and designs presented herein, as an instrument of service, is intended only for the specific purpose and client for which it was prepared. Reuse of and improper reliance on this document without written authorization and adaptation by Kimley-Horn and Associates, Inc. shall be without liability to Kimley-Horn and Associates, Inc.

## TABLE OF VARIABLE DIMENSIONS AND QUANTITIES FOR ONE HEADWALL (4)

| SLOPE | DIA OF PIPE, D | Values for one Pipe | | | | | | Values to be added for each addt'l Pipe | | |
|---|---|---|---|---|---|---|---|---|---|---|
| | | W | X | Y | L | Reinf (Lbs) | Conc (CY) (1) | X and W | Reinf (Lbs) | Conc (CY) (1) |
| 2:1 | 12" | 4'- 7 ½" | 2'- 6" | 2'-10" | 3'- 3 ¼" | 84 | 0.6 | 1'- 9" | 20 | 0.2 |
| | 15" | 5'- 5 ¾" | 2'- 9 ½" | 3'- 4" | 3'-10 ¼" | 99 | 0.7 | 2'- 2" | 24 | 0.3 |
| | 18" | 6'- 4 ¼" | 3'- 1" | 3'-10" | 4'- 5" | 120 | 0.9 | 2'- 8" | 32 | 0.3 |
| | 21" | 7'- 2 ¾" | 3'- 4 ½" | 4'- 4" | 5'- 0" | 137 | 1.1 | 3'- 1" | 43 | 0.4 |
| | 24" | 8'- 2 ½" | 3'- 9 ½" | 4'-10" | 5'- 7" | 158 | 1.3 | 3'- 7" | 50 | 0.5 |
| | 27" | 9'- 1" | 4'- 1" | 5'- 4" | 6'- 2" | 173 | 1.5 | 3'-11" | 56 | 0.6 |
| | 30" | 9'-11 ½" | 4'- 4 ½" | 5'-10" | 6'- 8 ¾" | 197 | 1.7 | 4'- 4" | 65 | 0.8 |
| | 33" | 10'-10" | 4'- 8" | 6'- 4" | 7'- 3 ¾" | 216 | 2.0 | 4'- 8" | 71 | 0.9 |
| | 36" | 11'- 8 ¼" | 4'-11 ½" | 6'-10" | 7'-10 ¾" | 241 | 2.2 | 5'- 1" | 81 | 1.0 |
| | 42" | 13'- 5 ¼" | 5'- 6 ½" | 7'-10" | 9'- 0 ½" | 290 | 2.8 | 5'-10" | 97 | 1.3 |
| | 48" | 15'- 9" | 6'- 1 ½" | 9'- 4" | 10'- 9 ¼" | 350 | 3.8 | 6'- 7" | 117 | 1.7 |
| | 54" | 17'- 5 ¾" | 6'- 8 ½" | 10'- 4" | 11'-11 ¼" | 415 | 4.5 | 7'- 6" | 151 | 2.1 |
| | 60" | 19'- 2 ¾" | 7'- 3 ½" | 11'- 4" | 13'- 1" | 469 | 5.3 | 8'- 3" | 174 | 2.5 |
| | 66" | 20'-11 ½" | 7'-10 ½" | 12'- 4" | 14'- 3" | 530 | 6.2 | 8'- 9" | 194 | 2.9 |
| | 72" | 22'- 8 ½" | 8'- 5 ½" | 13'- 4" | 15'- 4 ¾" | 587 | 7.1 | 9'- 4" | 213 | 3.3 |
| 3:1 | 12" | 6'- 3" | 2'- 6" | 4'- 3" | 4'-11" | 114 | 0.8 | 1'- 9" | 22 | 0.2 |
| | 15" | 7'- 5" | 2'- 9 ½" | 5'- 0" | 5'- 9 ¼" | 133 | 1.1 | 2'- 2" | 28 | 0.3 |
| | 18" | 8'- 6 ¾" | 3'- 1" | 5'- 9" | 6'- 7 ¾" | 166 | 1.3 | 2'- 8" | 37 | 0.5 |
| | 21" | 9'- 8 ¾" | 3'- 4 ½" | 6'- 6" | 7'- 6" | 189 | 1.6 | 3'- 1" | 48 | 0.6 |
| | 24" | 11'- 0" | 3'- 9 ½" | 7'- 3" | 8'- 4 ½" | 221 | 2.0 | 3'- 7" | 58 | 0.7 |
| | 27" | 12'- 2" | 4'- 1" | 8'- 0" | 9'- 2 ¾" | 245 | 2.3 | 3'-11" | 67 | 0.8 |
| | 30" | 13'- 4" | 4'- 4 ½" | 8'- 9" | 10'- 1 ¼" | 287 | 2.7 | 4'- 4" | 77 | 1.0 |
| | 33" | 14'- 5 ¾" | 4'- 8" | 9'- 6" | 10'-11 ¾" | 310 | 3.1 | 4'- 8" | 84 | 1.2 |
| | 36" | 15'- 7 ¾" | 4'-11 ½" | 10'- 3" | 11'-10" | 343 | 3.5 | 5'- 1" | 96 | 1.4 |
| | 42" | 17'-11 ½" | 5'- 6 ½" | 11'- 9" | 13'- 6 ¾" | 424 | 4.5 | 5'-10" | 119 | 1.7 |
| | 48" | 21'- 1 ¾" | 6'- 1 ½" | 14'- 0" | 16'- 2" | 527 | 6.1 | 6'- 7" | 146 | 2.3 |
| | 54" | 23'- 5 ½" | 6'- 8 ½" | 15'- 6" | 17'-10 ¾" | 618 | 7.3 | 7'- 6" | 186 | 2.9 |
| | 60" | 25'- 9 ¼" | 7'- 3 ½" | 17'- 0" | 19'- 7 ½" | 707 | 8.7 | 8'- 3" | 219 | 3.4 |
| | 66" | 28'- 1" | 7'-10 ½" | 18'- 6" | 21'- 4 ¼" | 797 | 10.1 | 8'- 9" | 242 | 3.9 |
| | 72" | 30'- 4 ¾" | 8'- 5 ½" | 20'- 0" | 23'- 1 ¼" | 910 | 11.7 | 9'- 4" | 272 | 4.4 |
| 4:1 | 12" | 7'-10 ¾" | 2'- 6" | 5'- 8" | 6'- 6 ½" | 144 | 1.1 | 1'- 9" | 24 | 0.3 |
| | 15" | 9'- 4" | 2'- 9 ½" | 6'- 8" | 7'- 8 ½" | 177 | 1.5 | 2'- 2" | 32 | 0.4 |
| | 18" | 10'- 9 ½" | 3'- 1" | 7'- 8" | 8'-10 ¼" | 217 | 1.9 | 2'- 8" | 42 | 0.5 |
| | 21" | 12'- 2 ¾" | 3'- 4 ½" | 8'- 8" | 10'- 0" | 254 | 2.3 | 3'- 1" | 57 | 0.7 |
| | 24" | 13'- 9 ½" | 3'- 9 ½" | 9'- 8" | 11'- 2" | 295 | 2.8 | 3'- 7" | 67 | 0.9 |
| | 27" | 15'- 3" | 4'- 1" | 10'- 8" | 12'- 3 ¾" | 328 | 3.3 | 3'-11" | 77 | 1.0 |
| | 30" | 16'- 8 ¼" | 4'- 4 ½" | 11'- 8" | 13'- 5 ¾" | 379 | 3.8 | 4'- 4" | 89 | 1.3 |
| | 33" | 18'- 1 ¾" | 4'- 8" | 12'- 8" | 14'- 7 ½" | 417 | 4.5 | 4'- 8" | 101 | 1.4 |
| | 36" | 19'- 7" | 4'-11 ½" | 13'- 8" | 15'- 9 ¼" | 464 | 5.1 | 5'-1" | 115 | 1.7 |
| | 42" | 22'- 5 ¾" | 5'- 6 ½" | 15'- 8" | 18'- 1" | 575 | 6.5 | 5'-10" | 141 | 2.1 |
| | 48" | 26'- 6 ¼" | 6'- 1 ½" | 18'- 8" | 21'- 6 ¾" | 720 | 8.9 | 6'- 7" | 175 | 2.8 |
| | 54" | 29'- 5" | 6'- 8 ½" | 20'- 8" | 23'-10 ¼" | 863 | 10.7 | 7'- 6" | 226 | 3.6 |
| | 60" | 32'- 3 ¾" | 7'- 3 ½" | 22'- 8" | 26'- 2" | 984 | 12.7 | 8'- 3" | 264 | 4.3 |
| | 66" | 35'- 2 ½" | 7'-10 ½" | 24'- 8" | 28'- 5 ¾" | 1126 | 14.9 | 8'- 9" | 300 | 4.9 |
| | 72" | 38'- 1 ¼" | 8'- 5 ½" | 26'- 8" | 30'- 9 ½" | 1283 | 17.3 | 9'- 4" | 334 | 5.6 |
| 6:1 | 12" | 11'- 2" | 2'- 6" | 8'- 6" | 9'- 9 ¾" | 220 | 1.9 | 1'- 9" | 28 | 0.4 |
| | 15" | 13'- 2 ¼" | 2'- 9 ½" | 10'- 0" | 11'- 6 ½" | 264 | 2.5 | 2'- 2" | 37 | 0.5 |
| | 18" | 15'- 2 ½" | 3'- 1" | 11'- 6" | 13'- 3 ¼" | 326 | 3.2 | 2'- 8" | 50 | 0.7 |
| | 21" | 17'- 2 ¾" | 3'- 4 ½" | 13'- 0" | 15'- 0 ¼" | 381 | 3.9 | 3'- 1" | 69 | 0.9 |
| | 24" | 19'- 4 ½" | 3'- 9 ½" | 14'- 6" | 16'- 9" | 447 | 4.8 | 3'- 7" | 80 | 1.2 |
| | 27" | 21'- 4 ¾" | 4'- 1" | 16'- 0" | 18'- 5 ¾" | 506 | 5.7 | 3'-11" | 96 | 1.4 |
| | 30" | 23'- 5 ¼" | 4'- 4 ½" | 17'- 6" | 20'- 2 ½" | 587 | 6.7 | 4'- 4" | 110 | 1.7 |
| | 33" | 25'- 5 ½" | 4'- 8" | 19'- 0" | 21'-11 ¼" | 667 | 7.8 | 4'- 8" | 127 | 2.0 |
| | 36" | 27'- 5 ¾" | 4'-11 ½" | 20'- 6" | 23'- 8" | 727 | 9.0 | 5'- 1" | 144 | 2.3 |
| | 42" | 31'- 6 ¼" | 5'- 6 ½" | 23'- 6" | 27'- 1 ½" | 914 | 11.5 | 5'-10" | 179 | 3.0 |
| | 48" | 37'- 3 ½" | 6'- 1 ½" | 28'- 0" | 32'- 4" | 1181 | 15.9 | 6'- 7" | 231 | 4.0 |
| | 54" | 41'- 4 ¼" | 6'- 8 ½" | 31'- 0" | 35'- 9 ½" | 1412 | 19.2 | 7'- 6" | 300 | 5.0 |
| | 60" | 45'- 4 ¾" | 7'- 3 ½" | 34'- 0" | 39'- 3" | 1619 | 22.9 | 8'- 3" | 353 | 6.0 |

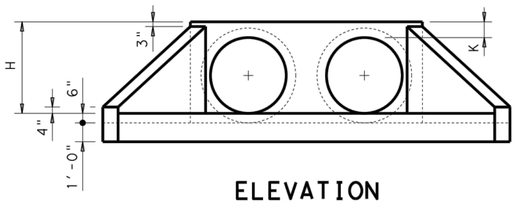


**ELEVATION**
Showing dimensions

(1) Quantities shown are for concrete pipe and will increase slightly for metal pipe installations.

(2) For vehicle safety, curbs shall project no more than 3" above finished grade. Curb heights shall be reduced, if necessary, to meet these requirements. No changes will be made in quantities and no additional compensation will be allowed for this work.

(3) Provide a 1'-0" footing as shown where required to maintain 4" Min cover for pipes.

(4) Quantities shown are for one structure end only (one headwall).

(5) Min Length = $6" + 3" \times \left(\frac{12 \times H - 7}{12 \times L}\right)$

Max Length = $12 \times H - 3" \times \left(\frac{12 \times H - 7}{12 \times L}\right) - 1"$

(6) Lengths of wings based on SL:1 Slope along this line.

## TABLE OF REINFORCING STEEL (4)

| Bar | Size | Spa | No. |
|---|---|---|---|
| A | # 4 | 1'-0" | ~ |
| B | # 3 | 1'-6" | ~ |
| C | # 4 | 1'-0" | ~ |
| D | # 3 | 1'-0" | ~ |
| E | # 5 | ~ | 4 |
| F | # 5 | ~ | ~ |
| G | # 3 | ~ | 2 |
| S | # 4 | ~ | 6 |
| V | # 4 | 1'-0" | ~ |
| W | # 5 | ~ | 4 |
| | | | |

## TABLE OF CONSTANT DIMENSIONS

| DIA OF PIPE, D | G | K | H |
|---|---|---|---|
| 12" | 9" | 1'- 0" | 2'- 0" |
| 15" | 11" | 1'- 0" | 2'- 3" |
| 18" | 1'- 2" | 1'- 0" | 2'- 6" |
| 21" | 1'- 4" | 1'- 0" | 2'- 9" |
| 24" | 1'- 7" | 1'- 0" | 3'- 0" |
| 27" | 1'- 8" | 1'- 0" | 3'- 3" |
| 30" | 1'-10" | 1'- 0" | 3'- 6" |
| 33" | 1'-11" | 1'- 0" | 3'- 9" |
| 36" | 2'- 1" | 1'- 0" | 4'- 0" |
| 42" | 2'- 4" | 1'- 0" | 4'- 6" |
| 48" | 2'- 7" | 1'- 3" | 5'- 3" |
| 54" | 3'- 0" | 1'- 3" | 5'- 9" |
| 60" | 3'- 3" | 1'- 3" | 6'- 3" |
| 66" | 3'- 3" | 1'- 3" | 6'- 9" |
| 72" | 3'- 4" | 1'- 3" | 7'- 3" |

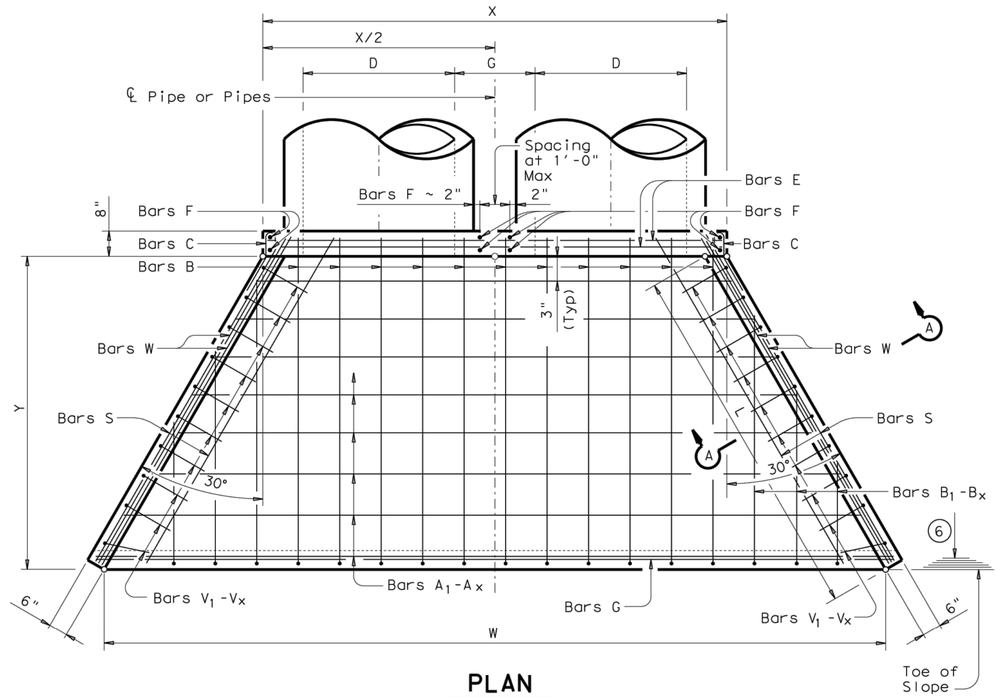


**PLAN**

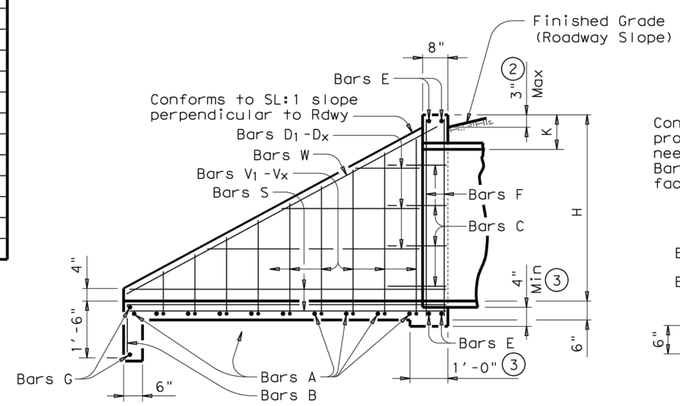


**TYPICAL WING ELEVATION**

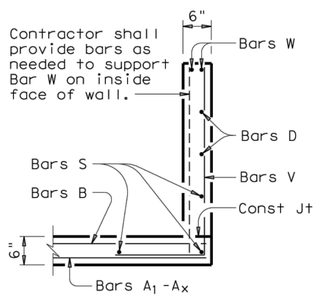


**SECTION A-A**

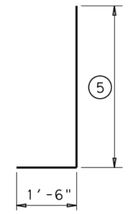


**BARS V**

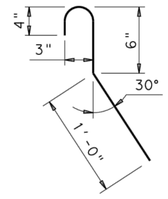


**BARS C**
(2'-0" long)

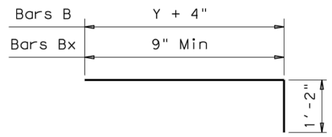


**BARS B & $B_1$-$B_x$**

**GENERAL NOTES:**

Designed according to AASHTO LRFD Specifications.

Reinforcing steel shall be placed with the center of the outside layer of bars 2" from the surface of the concrete.

All reinforcing steel shall be Grade 60.

All concrete shall be Class "C" and shall have a minimum compressive strength of 3600 psi.

No bridge rails of any type may be mounted directly to these culvert headwalls.

Texas Department of Transportation

Bridge Division Standard

# CONCRETE HEADWALLS WITH FLARED WINGS FOR 0° SKEW PIPE CULVERTS

## CH-FW-0

| FILE: chfw00se.dgn | DN: TxDOT | CK: TxDOT | DW: TxDOT | CK: GAF |
|---|---|---|---|---|
| ©TxDOT February 2010 | CONT | SECT | JOB | HIGHWAY |
| REVISIONS | DIST | COUNTY | | SHEET NO. |

DISCLAIMER:
The use of this standard is governed by the "Texas Engineering Practice Act". No warranty of any kind is made by TxDOT for any purpose whatsoever. TxDOT assumes no responsibility for the conversion of this standard to other formats or for incorrect results or damages resulting from its use.

DATE:
FILE:

DISCLAIMER:
The use of this standard is governed by the "Texas Engineering Practice Act". No warranty of any kind is made by TxDOT for any purpose whatsoever. TxDOT assumes no responsibility for the conversion of this standard to other formats or for incorrect results or damages resulting from its use.

DATE:
FILE:

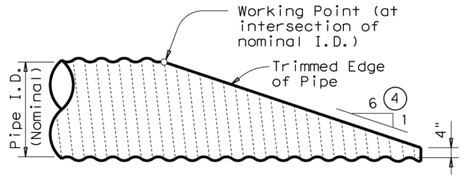


NOTE: All Cross Pipes, calculations, and dimensions are based on the pipe culverts mitered as shown in this detail. Alternate styles of mitered ends will require that appropriate adjustments be made to the values presented on this standard.

## SIDE ELEVATION OF TYPICAL PIPE CULVERT MITER

(Showing Corrugated Metal Pipe Culvert.)
(Details at Concrete Pipe Culvert are similar.)

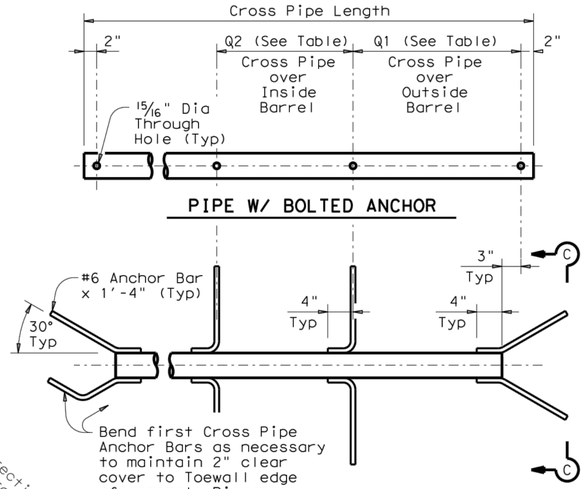


PIPE W/ BOLTED ANCHOR

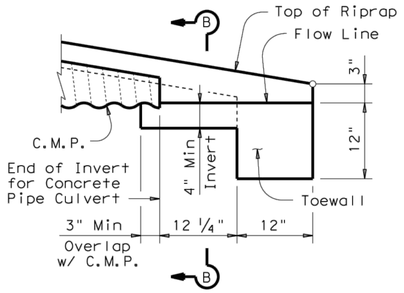


## DETAIL "A"

(Showing Invert with Corrugated Metal Pipe Culvert. Concrete Pipe Culvert details are similar. Cross Pipes not shown for clarity.)

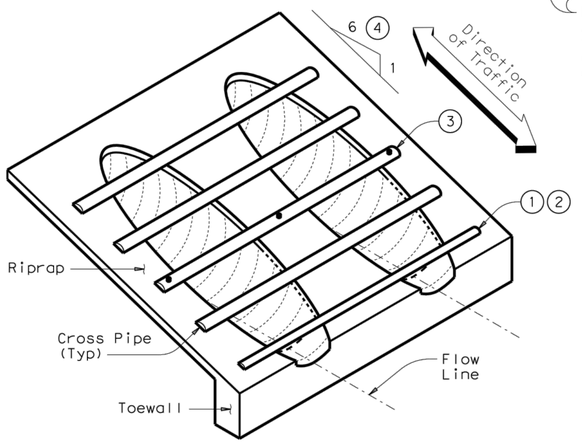


## ISOMETRIC VIEW OF TYPICAL INSTALLATION

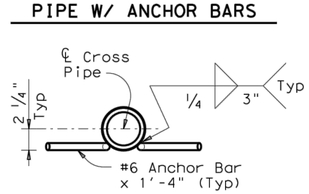


SECTION C-C

PIPE W/ ANCHOR BARS

## CROSS PIPE DETAILS

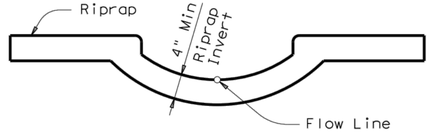


## SECTION B-B

(Cross Pipes not shown for clarity.)

## CROSS PIPE LENGTHS, REQUIRED PIPE SIZES, & RIPRAP QUANTITIES (2)

| Nominal Culvert I.D. | Conc Riprap (CY) (6) | Pipe Culvert Spa ~ G | Single Barrel ~ Q1 | Multi-Barrel ~ Q1 | Q2 | Conditions for use of Cross Pipes | Cross Pipe Size |
|---|---|---|---|---|---|---|---|
| 12" | 0.6 | 9" | N/A | 2'- 1" | 1'- 9" | 3 or more Pipe Culverts | 3" Std (3.500" O.D.) |
| 15" | 0.7 | 11" | N/A | 2'- 5" | 2'- 2" | | |
| 18" | 0.8 | 1'- 2" | N/A | 2'-10" | 2'- 8" | | |
| 21" | 0.9 | 1'- 4" | N/A | 3'- 2" | 3'- 1" | | |
| 24" | 0.9 | 1'- 7" | N/A | 3'- 6" | 3'- 7" | | |
| 27" | 1.0 | 1'- 8" | N/A | 3'-10" | 3'-11" | 3 or more Pipe Culverts | 3 1/2" Std (4.000" O.D.) |
| 30" | 1.1 | 1'-10" | N/A | 4'- 2" | 4'- 4" | 2 or more Pipe Culverts | |
| 33" | 1.2 | 1'-11" | 4'- 2" | 4'- 5" | 4'- 8" | All Pipe Culverts | |
| 36" | 1.3 | 2'- 1" | 4'- 5" | 4'- 9" | 5'- 1" | All Pipe Culverts | 4" Std (4.500" O.D.) |
| 42" | 1.5 | 2'- 4" | 4'-11" | 5'- 5" | 5'-10" | | |
| 48" | 1.7 | 2'- 7" | 5'- 5" | 6'- 0" | 6'- 7" | All Pipe Culverts | 5" Std (5.563" O.D.) |
| 54" | 2.0 | 3'- 0" | 5'-11" | 6'- 9" | 7'- 6" | | |
| 60" | 2.2 | 3'- 3" | 6'- 5" | 7'- 4" | 8'- 3" | | |
| 66" | 2.4 | 3'- 3" | 6'-11" | 7'-10" | 8'- 9" | | |
| 72" | 2.7 | 3'- 4" | 7'- 5" | 8'- 5" | 9'- 4" | | |

(1) The proper installation of the first Cross Pipe is critical for vehicle safety. The top of the first Cross Pipe must be placed at no more than 6" above the flow line.

(2) Size of Cross Pipes, except the first bottom pipe, shall be as shown in the PIPE SIZE table. The first bottom pipe shall be 3 1/2" Standard Pipe (4" O.D.).

(3) The third Cross Pipe from the bottom of the Culvert shall always be installed using a bolted connection. Care shall be taken to ensure that Riprap concrete does not flow into the Cross Pipe so as to permit disassembly of the bolted connection to allow cleanout access. At the Contractor's option, all other Cross Pipes may also be installed using the bolted connection details.

(4) Match Cross Slope as shown elsewhere in the plans. Cross Slope of 6:1 or flatter is required for vehicle safety.

(5) Riprap placed beyond the limits shown will be paid as Concrete Riprap in accordance with Item 432, "Riprap".

(6) Quantities shown are for one end of one reinforced Concrete Pipe Culvert. For multiple pipe culverts or for Corrugated Metal Pipe Culverts, quantities will need to be adjusted. Riprap quantities are for Contractor's information only.

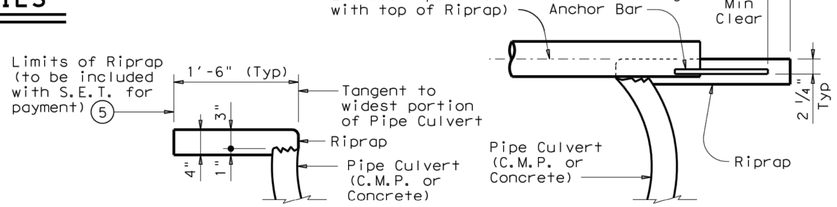


SHOWING TYPICAL PIPE CULVERT & RIPRAP

SHOWING CROSS PIPE WITH ANCHOR BAR

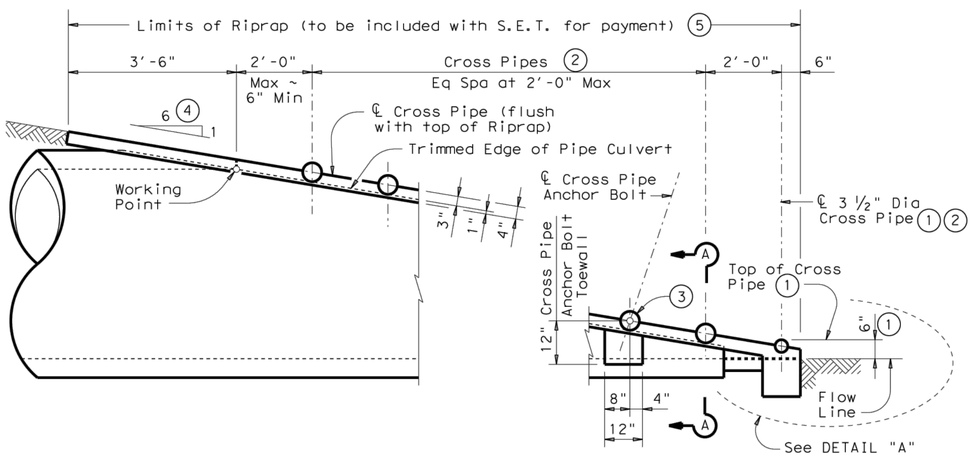


## SIDE ELEVATION OF CAST-IN-PLACE CONCRETE

(Showing Concrete Pipe Culvert.)
(Details at Corrugated Metal Pipe Culvert are similar.)

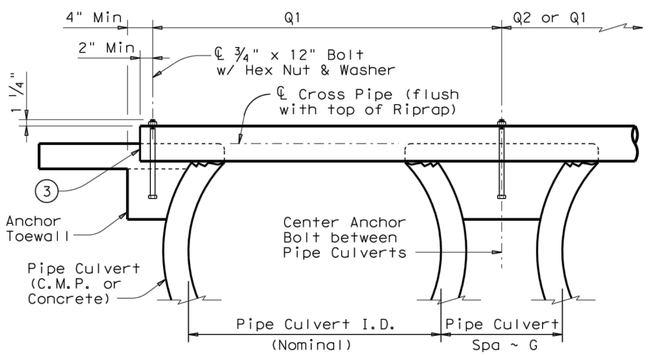


SHOWING CROSS PIPE WITH BOLTED ANCHOR

## SECTION A-A

### GENERAL NOTES:

Cross Pipes are designed for a traversing load of 10,000 pounds at yield as recommended by Research Report 280-2F, "Safety Treatment of Roadside Parallel-Drainage Structures", Texas Transportation Institute, March 1981.

Safety End Treatments shown herein are intended for use in those installations where out of control vehicles are likely to traverse the openings approximately perpendicular to the Cross Pipes.

Riprap and all necessary inverts shall be Concrete Riprap conforming to the requirements of Item 432, "Riprap".

Synthetic fibers listed on the "Fibers for Concrete" Material Producer List (MPL) may be used in lieu of steel reinforcing in riprap concrete unless noted otherwise.

Payment for riprap and toewall is included in the Price Bid for each Safety End Treatment.

Cross Pipes shall conform to the requirements of ASTM A53 (Type E or S, Grade B), ASTM A500 (Grade B), or API 5LX52.

Bolts and nuts shall conform to ASTM A307.

All steel components, except concrete reinforcing, shall be galvanized after fabrication. Galvanizing damaged during transport or construction shall be repaired in accordance with the specifications.

Texas Department of Transportation

Bridge Division Standard

# SAFETY END TREATMENT

FOR 12" DIA TO 72" DIA
PIPE CULVERTS
TYPE II ~ PARALLEL DRAINAGE

## SETP-PD

| FILE: setppdse.dgn | DN: GAF | CK: CAT | DW: JRP | CK: GAF |
|---|---|---|---|---|
| ©TxDOT February 2010 | CONT | SECT | JOB | HIGHWAY |
| REVISIONS | | | | |
| 11-10: Add note for synthetic fibers. | DIST | COUNTY | | SHEET NO. |

Printed By:Shadbolt, Cody, September 08, 2021 09:05:28am K:\IAC_Civil\063543031_Addison_Alpha_Road_Connector\CADD\PlanSheets\Drainage Details.dwg
For discontinuity, together with the concepts and designs presented herein, as an instrument of service, is intended only for the specific purpose and client for which it was prepared. Reuse of and improper reliance on this document without written authorization and adaptation by Kimley-Horn and Associates, Inc. shall be without liability to Kimley-Horn and Associates, Inc.

## STORM SEWER – GENERAL NOTES:

1. ALL CONCRETE DRAINAGE STRUCTURES SHALL BE CLASS C CONCRETE MINIMUM.
2. ALL CRUSHED STONE SHALL BE 3/4", PASSING #4 SIEVE (GRADE 4).
3. ALL FIELD JOINTS WILL BE APPROVED BY THE TOWN ENGINEER IF NECESSARY. FIELD JOINTS SHALL BE WIPED ON THE INSIDE AND OUTSIDE TO PROVIDE FOR SMOOTH FLOW OF WATER.
4. RAMNECK COMPOUND OR APPROVED EQUAL SHALL BE USED FOR JOINT SEALS.
5. ALL STORM SEWER PIPE SHALL BE CAMERA INSPECTED AFTER THE INSTALLATION OF ALL PAVING AND UTILITIES AND PRIOR TO FINAL ACCEPTANCE OF THE PROJECT.

Addison! PUBLIC WORKS DEPARTMENT | STORM SEWER GENERAL NOTES | STANDARD CONSTRUCTION DETAILS STORM DRAINAGE | DATE: AUGUST, 2010 | REV DATE: – | SHEET : SD-001

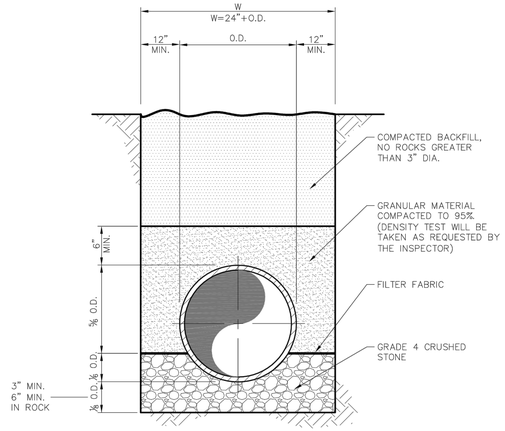


RCP STORM SEWER PIPE BEDDING
NTS

NOTE:
1. THE DEPTH OF TRENCH BELOW THE PROPOSED CONDUIT SHALL BE AS FOLLOWS:
   – 3" MIN. FOR 27" PIPE & SMALLER.
   – 4" MIN. FOR 30" TO 60" PIPE.
   – 6" MIN. FOR 66" PIPE OR LARGER.

Addison! PUBLIC WORKS DEPARTMENT | RCP STORM SEWER PIPE BEDDING | STANDARD CONSTRUCTION DETAILS STORM DRAINAGE | DATE: AUGUST, 2010 | REV DATE: – | SHEET : SD-003

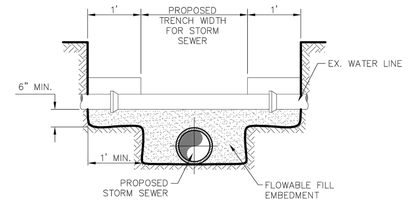


UTILITY SUPPORT DETAIL
NTS

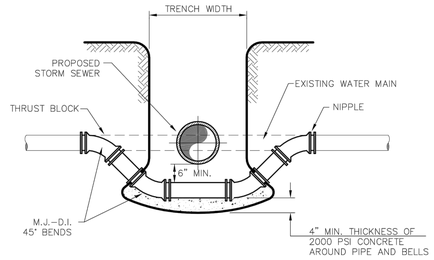


WATER MAIN LOWERING DETAIL
NTS

Addison! PUBLIC WORKS DEPARTMENT | WATER MAIN LOWERING & UTILITY SUPPORT DETAILS | STANDARD CONSTRUCTION DETAILS STORM DRAINAGE | DATE: AUGUST, 2010 | REV DATE: – | SHEET : SD-004

NOTE:
REINFORCEMENT SHOWN IS ADDITIONAL FOR SPECIAL CONDITION, FOR REMAINDER OF REINFORCEMENT SEE SECTIONS.

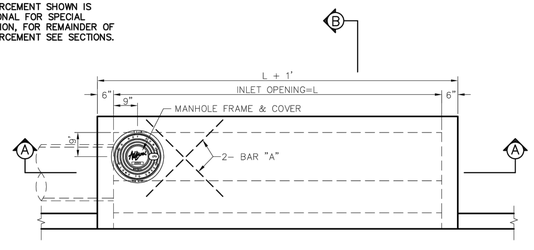


PLAN–STANDARD INLET
NTS

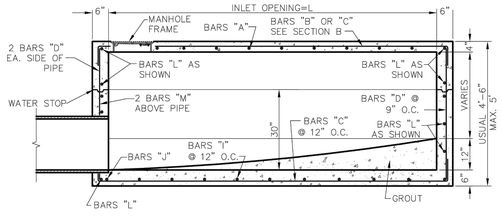


SECTION A
NTS

Addison! PUBLIC WORKS DEPARTMENT | STANDARD CURB INLET 4, 6, 8 & 10 FOOT INLETS | STANDARD CONSTRUCTION DETAILS STORM DRAINAGE | DATE: AUGUST, 2010 | REV DATE: – | SHEET : SD-012

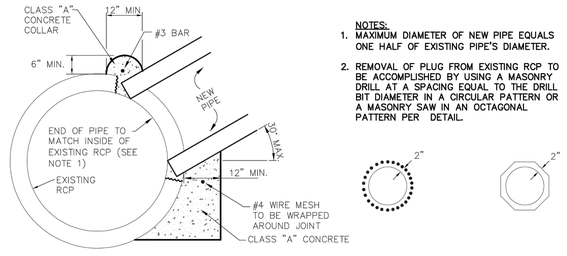


NOTES:
1. MAXIMUM DIAMETER OF NEW PIPE EQUALS ONE HALF OF EXISTING PIPE'S DIAMETER.
2. REMOVAL OF PLUG FROM EXISTING RCP TO BE ACCOMPLISHED BY USING A MASONRY DRILL AT A SPACING EQUAL TO THE DRILL BIT DIAMETER IN A CIRCULAR PATTERN OR A MASONRY SAW IN AN OCTAGONAL PATTERN PER DETAIL.




CONNECTION TO EXISTING RCP STORM DRAIN
NTS

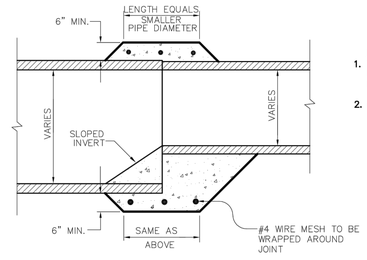


NOTES:
1. THIS PROCEDURE/DETAIL WILL ONLY BE USED WHEN A PREFAB REDUCTION IS NOT POSSIBLE.
2. CONCRETE SHALL BE CLASS A.

PIPE COLLAR
NTS

Addison! PUBLIC WORKS DEPARTMENT | CONNECTION TO EXISTING RCP STORM DRAIN PIPE COLLAR | STANDARD CONSTRUCTION DETAILS STORM DRAINAGE | DATE: AUGUST, 2010 | REV DATE: – | SHEET : SD-005

Know what's **below.** **Call** before you dig.

| No. | REVISIONS | DATE | BY |
|---|---|---|---|
| | | | |

PROJECT NO. 2021-01C/ BID NO. 21-69

Kimley»Horn
2201 WEST ROYAL LANE, SUITE 275, IRVING, TX 75063
PHONE: 214-420-5600
WWW.KIMLEY-HORN.COM
© 2021 KIMLEY-HORN AND ASSOCIATES, INC.
TEXAS REGISTERED ENGINEERING FIRM #F-928

9/10/2021

STATE OF TEXAS
RYAN DELMOTTE
114242
LICENSED PROFESSIONAL ENGINEER

| KHA PROJECT 063543031 | DATE 09/10/2021 | SCALE AS SHOWN | DESIGNED BY RMD | DRAWN BY CDS | CHECKED BY LNA |
|---|---|---|---|---|---|

**TOWN OF ADDISON**
ALPHA ROAD CONN.
FROM FARMERS BRANCH CREEK TO ALPHA ROAD

DRAINAGE
STANDARD DETAILS
TOWN OF ADDISON

SHEET NUMBER
C4.19

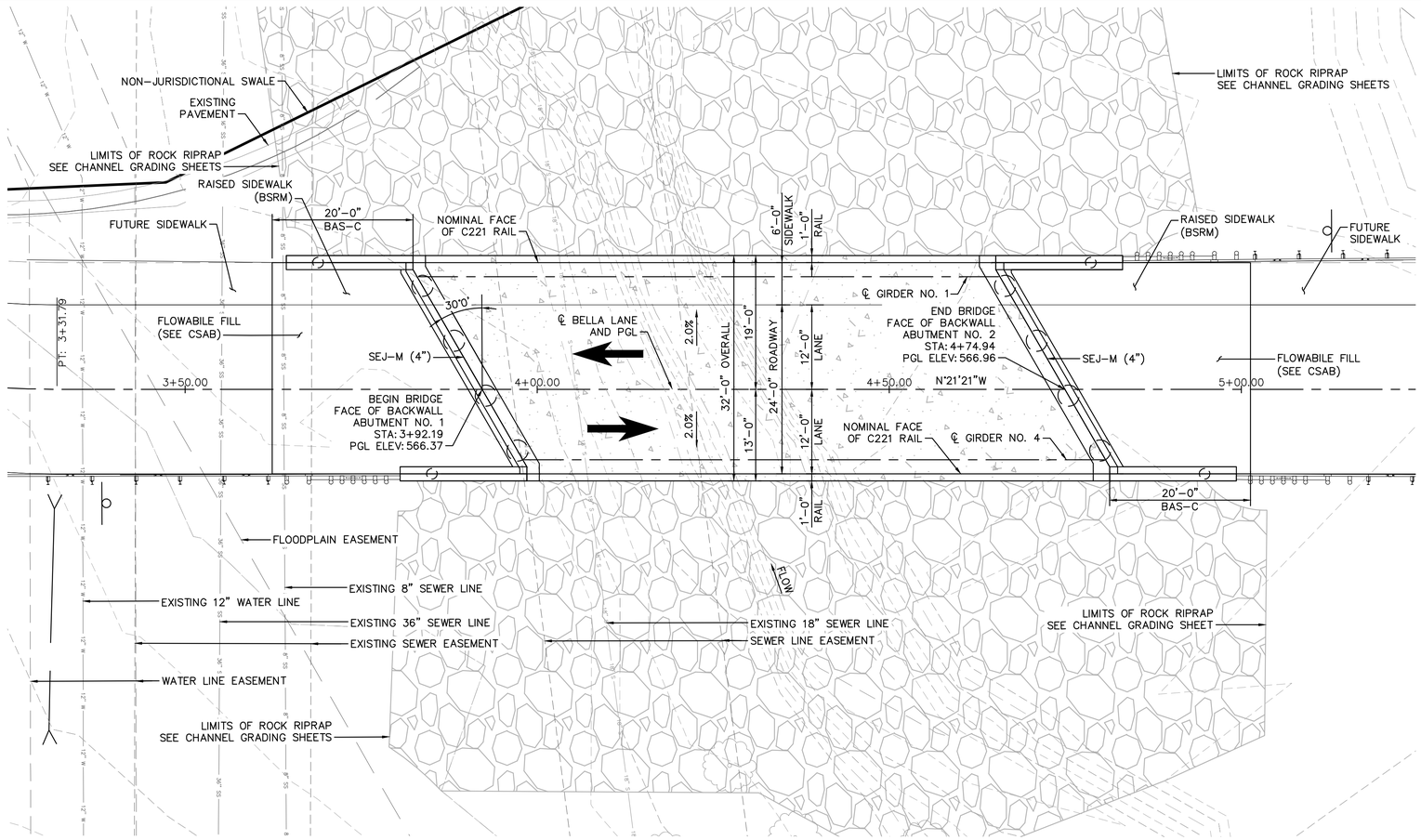


PLAN

SCALE: 1" = 10'-0"

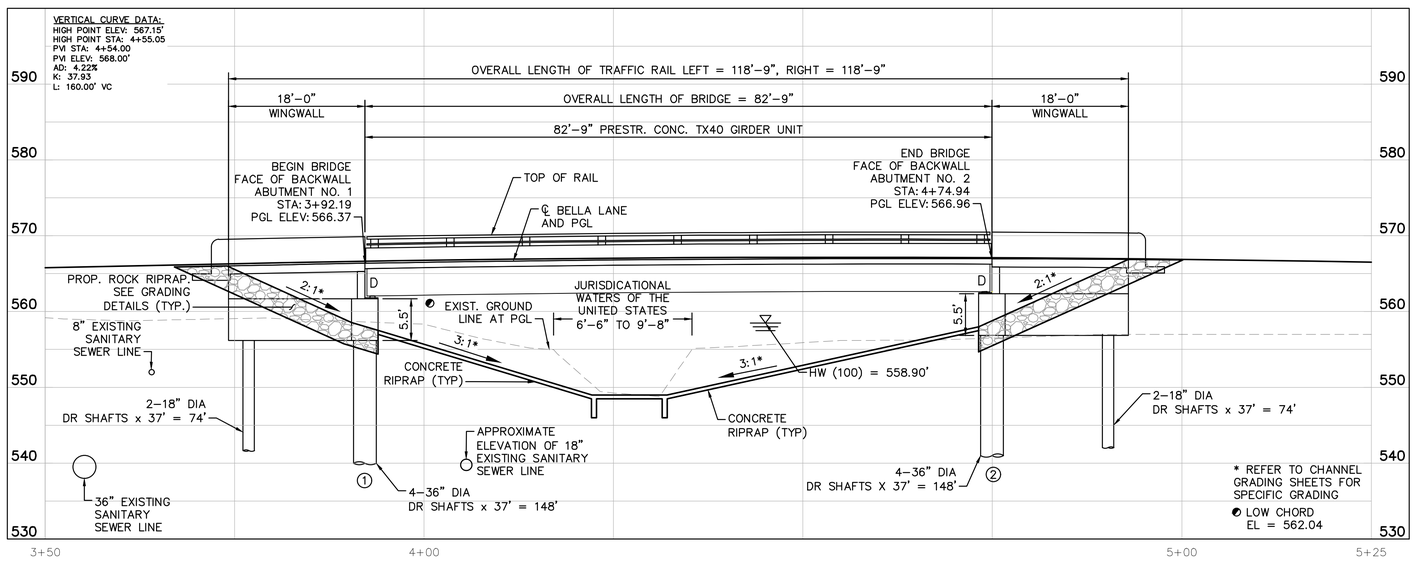


BRIDGE ELEVATION

SCALE: 1" = 10'-0"

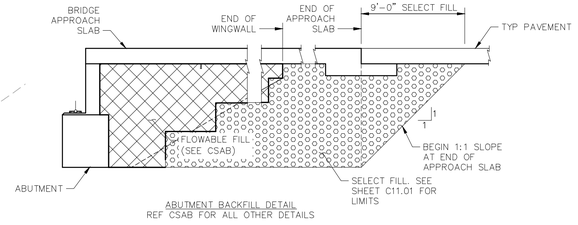


ABUTMENT BACKFILL DETAIL
REF CSAB FOR ALL OTHER DETAILS

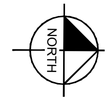


GRAPHIC SCALE IN FEET
0 5 10 20

NOTES
1. BRIDGE DESIGNED FOR HL93 LOADING UNDER 2017 AASHTO LRFD SPECIFICATIONS AND INTERIM REVISIONS THERETO.
2. ALL DIMENSIONS ARE HORIZONTAL AND MUST BE ADJUSTED FOR GRADE AND CROSS SLOPE.
3. VERIFY ALL DIMENSIONS IN THE FIELD PRIOR TO CONSTRUCTION.
4. CONTRACTOR SHALL LOCATE AND VERIFY ELEVATIONS OF UTILITIES PRIOR TO ANY DRILLING OR EXCAVATION. CONTRACTOR IS RESPONSIBLE TO PROTECT ALL EXISTING UTILITIES DURING CONSTRUCTION.
5. REFER TO GEOTECHNICAL ENGINEERING REPORT PROJECT NUMBER 20212439.001A DATED DECEMBER 2,2020 BY KLEINFELDER. CONTRACTOR SHALL REVIEW ALL RECOMMENDATIONS INCLUDED IN THIS REPORT AND FOLLOW STATED RECOMMENDATIONS UNLESS OTHERWISE INDICATED ON THE DRAWINGS.
6. EXTEND DRILLED SHAFTS TO THE LENGTH SHOWN OR DEEPER AS NECESSARY TO OBTAIN A MINIMUM PENETRATION OF TWELVE (12) FEET INTO THE BEARING STRATA.
7. BEARING CONDITIONS:
   D = DOWEL

FULLY-DEVELOPED HYDRAULIC DATA
UPSTREAM BRIDGE FACE

| EXISTING: | PROPOSED: |
|---|---|
| Q(100) = 1665 CFS | Q(100) = 1665 CFS |
| HW(100) = 559.19' | HW(100) = 558.90' |
| V(100) = 5.42 FPS | V(100) = 4.52 FPS |

Know what's **below.** **Call** before you dig.

| No. | REVISIONS | DATE | BY |
|---|---|---|---|
| | | | |

PROJECT NO. XXXXX/ BID NO. XXXX-XXX

Kimley»Horn
2201 WEST ROYAL LANE, SUITE 275, IRVING, TX 75063
PHONE: 214-420-5600
WWW.KIMLEY-HORN.COM
© 2021 KIMLEY-HORN AND ASSOCIATES, INC.
TEXAS REGISTERED ENGINEERING FIRM #F-928

STATE OF TEXAS
BRIAN J. LAFOY
89363
LICENSED PROFESSIONAL ENGINEER
09/10/2021

| KHA PROJECT 063543031 | DATE 09/10/2021 | SCALE AS SHOWN | DESIGNED BY BCS |
|---|---|---|---|
| | | DRAWN BY AT/TLS | CHECKED BY BJL |

**TOWN OF ADDISON**
ALPHA ROAD CONN.
FROM FARMERS BRANCH CREEK TO ALPHA ROAD

# STRUCTURAL
# BRIDGE LAYOUT
# PLAN & PROFILE

SHEET NUMBER
C5.01

Plotted By:Turabi, Abuzar, September 10, 2021 08:18:57am K:\IAC-Civil\063543031_Addison_Alpha_Road_Connector\CADD\PlanSheets\Structures_Bridge Layout.dwg
This document, together with the concepts and designs presented herein, as an instrument of service, is intended only for the specific purpose and client for which it was prepared. Reuse of and improper reliance on this document without written authorization and adaptation by Kimley-Horn and Associates, Inc. shall be without liability to Kimley-Horn and Associates, Inc.

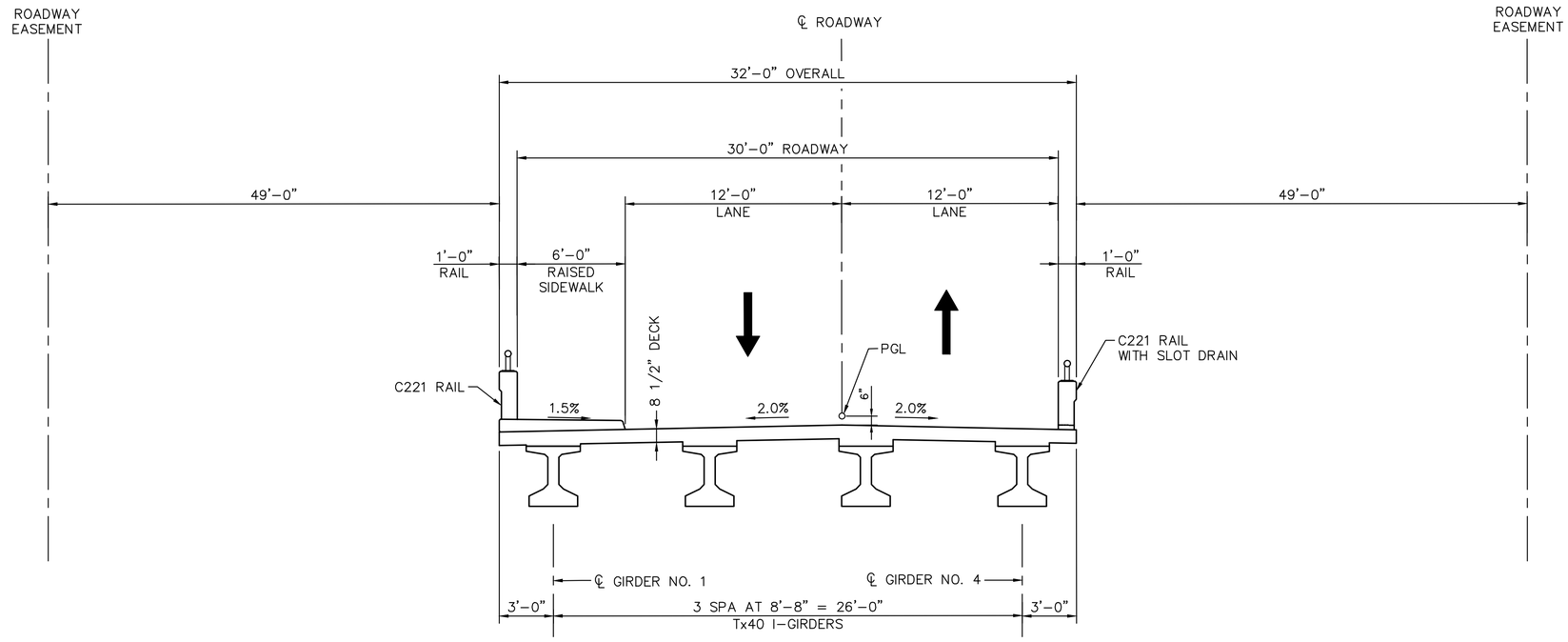


TYPICAL SECTION

SCALE: 3" = 1'–0"

Know what's **below.**
**Call** before you dig.

| No. | REVISIONS | DATE | BY |
|---|---|---|---|
| | | | |

PROJECT NO. XXXXX/ BID NO. XXXX–XXX


Kimley»Horn
2201 WEST ROYAL LANE, SUITE 275, IRVING, TX 75063
PHONE: 214-420-5600
WWW.KIMLEY-HORN.COM


© 2021 KIMLEY-HORN AND ASSOCIATES, INC.

TEXAS REGISTERED ENGINEERING FIRM #F-928

STATE OF TEXAS
BRIAN J. LAFOY
89363
LICENSED
PROFESSIONAL ENGINEER
09/10/2021

| | |
|---|---|
| KHA PROJECT | 063543031 |
| DATE | 09/10/2021 |
| SCALE | AS SHOWN |
| DESIGNED BY | BCS |
| DRAWN BY | AT/TLS |
| CHECKED BY | BJL |

**TOWN OF ADDISON**
ALPHA ROAD CONN.
FROM FARMERS BRANCH CREEK TO ALPHA ROAD

# STRUCTURAL TYPICAL SECTION

SHEET NUMBER
C5.02


Plotted By: Turabi, Abuzar September 10, 2021 08:19:00am K:\LAC_Civil\063543031_Addison_Alpha_Road_Connector\C-ADD\PlanSheets\Structures\C_Typical Section.dwg
This document, together with the concepts and designs presented herein, as an instrument of service, is intended only for the specific purpose and client for which it was prepared. Reuse of and improper reliance on this document without written authorization and adaptation by Kimley-Horn and Associates, Inc. shall be without liability to Kimley-Horn and Associates, Inc.

| ITEM NO. | 401 | 416 | 416 | 420 | 422 | 422 | 425 | 450 | 434 | 442 | 454 | 422 |
|---|---|---|---|---|---|---|---|---|---|---|---|---|
| DESC. CODE | 6001 | 6001 | 6004 | 6014 | 6002 | 6016 | 6039 | 6011 | 6002 | 6008 | 6018 | 6014 |
| DESCRIPTION | FLOWABLE BACKFILL | DRILL SHAFT (18 IN) | DRILL SHAFT (36 IN) | CL C CONC (ABUT) (HPC) | REINF CONC SLAB (HPC) | APPROACH SLAB (HPC) | PRESTR CONC GIRDER (TX40) | RAIL (TY T221) (HPC) | ELASTOMERIC BEARING (LAMINATED) | STR STEEL (MISCELLANEOUS BRIDGE) (BS-EJCP) | SEALED EXPANSION JOINT (4 IN) (SEJ-M) | BRIDGE SIDEWALK (HPC) |
| | CY | LF | LF | CY | SF | CY | LF | LF | EA | LB | LF | SF |
| | | | | | | | | | | | | |
| ABUTMENTS | 443 | 148 | 296 | 99.3 | | 83 | | 237.6 | 8 | 186 | 50.4 | 490 |
| 82.75' PRESTR CONC Tx40 I-GIRDER UNIT | | | | | 2,648 | | 329.0 | | | | | |
| | | | | | | | | | | | | |
| TOTAL | 443 | 148 | 296 | 99.3 | 2,648 | 83 | 329.0 | 237.6 | 8 | 186 | 50.4 | 490 |

Know what's **below.**
**Call** before you dig.

| No. | REVISIONS | DATE | BY |
|---|---|---|---|
| | | | |

PROJECT NO. XXXXX/ BID NO. XXXX-XXX


Kimley»Horn
2201 WEST ROYAL LANE, SUITE 275, IRVING, TX 75063
PHONE: 214-420-5600
WWW.KIMLEY-HORN.COM


© 2021 KIMLEY-HORN AND ASSOCIATES, INC.

TEXAS REGISTERED ENGINEERING FIRM #F-928

STATE OF TEXAS
BRIAN J. LAFOY
89363
LICENSED
PROFESSIONAL ENGINEER
09/10/2021

| | |
|---|---|
| KHA PROJECT | 063543031 |
| DATE | 09/10/2021 |
| SCALE | AS SHOWN |
| DESIGNED BY | BCS |
| DRAWN BY | AT/TLS |
| CHECKED BY | BJL |

**TOWN OF ADDISON**
ALPHA ROAD CONN.
FROM FARMERS BRANCH
CREEK TO ALPHA ROAD

# STRUCTURAL ESTIMATED QUANTITIES

SHEET NUMBER
C5.03


Plotted By: Turabi, Abuzar September 10, 2021 08:19:02am K:\LAC_Civil\063543031_Addison_Alpha_Road_Connector\CADD\PlanSheets\Structures\3_Estimated Bridge Quantities.dwg
This document, together with the concepts and designs presented herein, as an instrument of service, is intended only for the specific purpose and client for which it was prepared. Reuse of

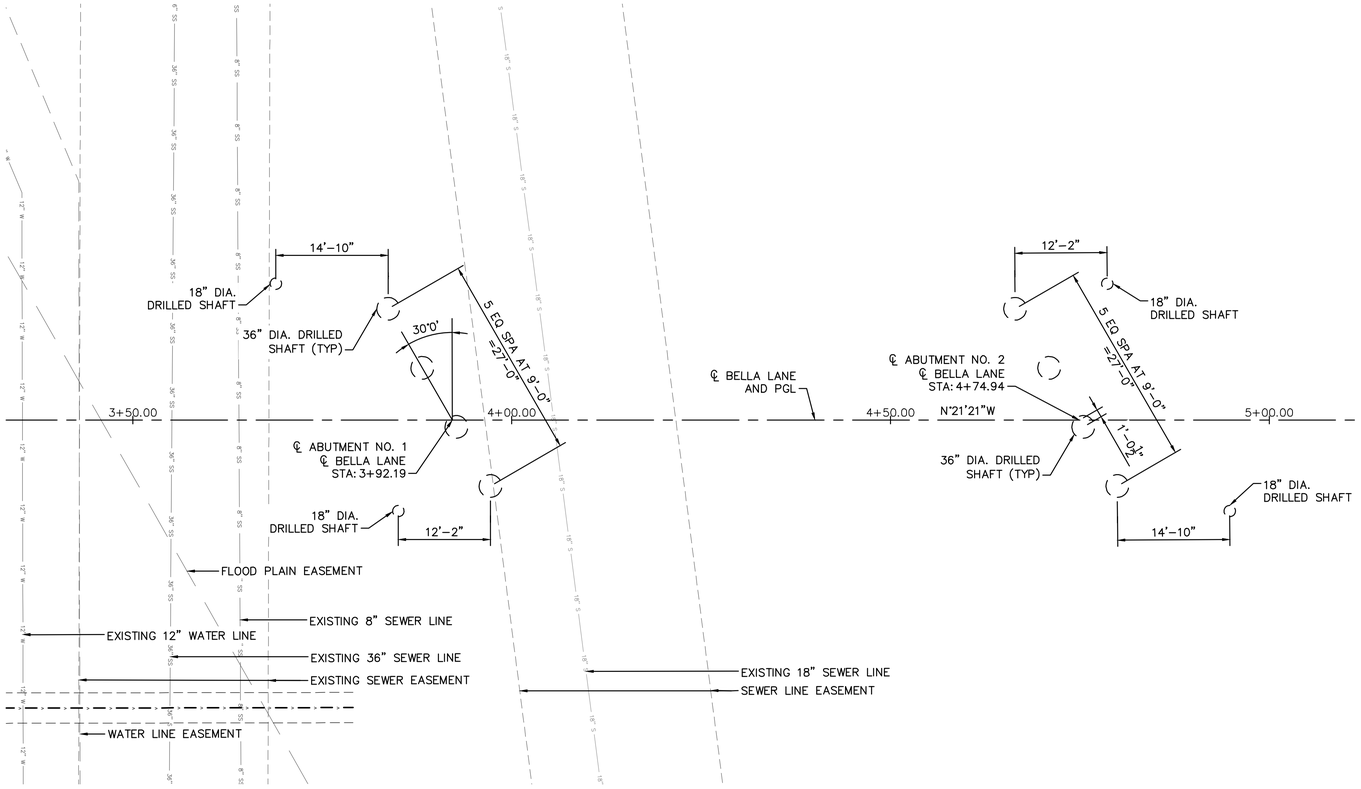


PLAN

SCALE: 1" = 10'-0"




GRAPHIC SCALE IN FEET

0 5 10 20

NOTES

1. SEE BRIDGE LAYOUT FOR DRILLED SHAFT LENGTHS.
2. SEE FOUNDATION DETAIL STANDARD SHEET FD FOR FOUNDATION DETAILS AND NOTES.

Know what's **below.**
**Call** before you dig.

| No. | REVISIONS | DATE | BY |
|---|---|---|---|
| | | | |

PROJECT NO. XXXXX/ BID NO. XXXX-XXX


Kimley»Horn
2201 WEST ROYAL LANE, SUITE 275, IRVING, TX 75063
PHONE: 214-420-5600
WWW.KIMLEY-HORN.COM


© 2021 KIMLEY-HORN AND ASSOCIATES, INC.

TEXAS REGISTERED ENGINEERING FIRM #F-928

STATE OF TEXAS
BRIAN J. LAFOY
89363
LICENSED
PROFESSIONAL ENGINEER
09/10/2021

| | |
|---|---|
| KHA PROJECT | 063543031 |
| DATE | 09/10/2021 |
| SCALE | AS SHOWN |
| DESIGNED BY | BCS |
| DRAWN BY | AT/TLS |
| CHECKED BY | BJL |

**TOWN OF ADDISON**
ALPHA ROAD CONN.
FROM FARMERS BRANCH
CREEK TO ALPHA ROAD

# STRUCTURAL FOUNDATION LAYOUT

SHEET NUMBER
C5.04


Plotted By: Turabi, Abuzar September 10, 2021 08:19:05am K:\JAC_Civil\063543031_Addison_Alpha_Road_Connector\CADD\PlanSheets\Structures\4_Foundation Plan.dwg
This document, together with the concepts and designs presented herein, as an instrument of service, is intended only for the specific purpose and client for which it was prepared. Reuse of and improper reliance on this document without written authorization and adaptation by Kimley-Horn and Associates, Inc. shall be without liability to Kimley-Horn and Associates, Inc.

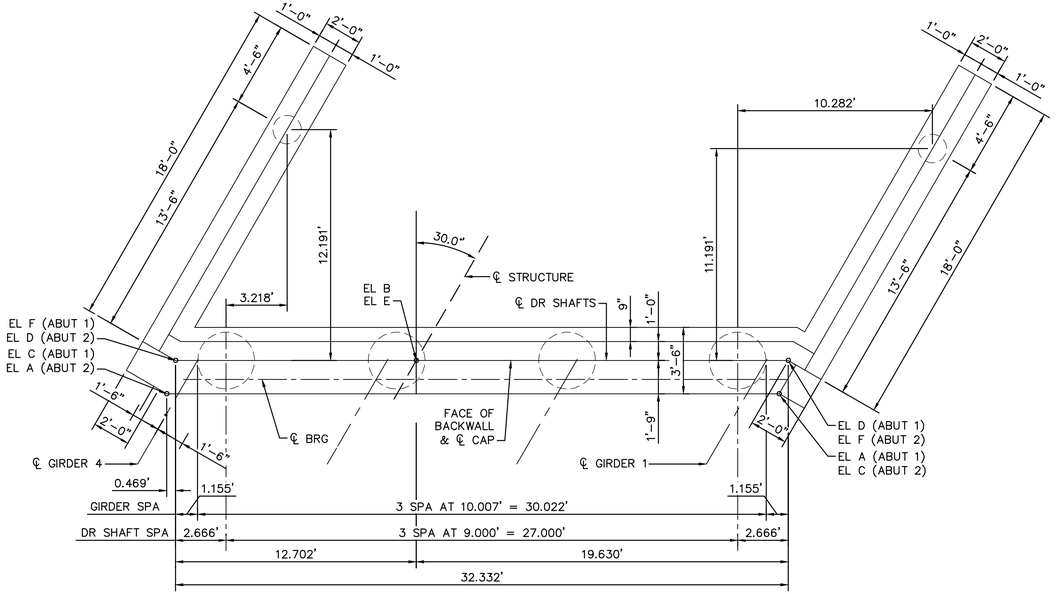


PLAN
(ABUTMENT 1 LOOKING BACKSTATION)
(ABUTMENT 8 OPPOSITE-HAND, LOOKING UPSTATION)

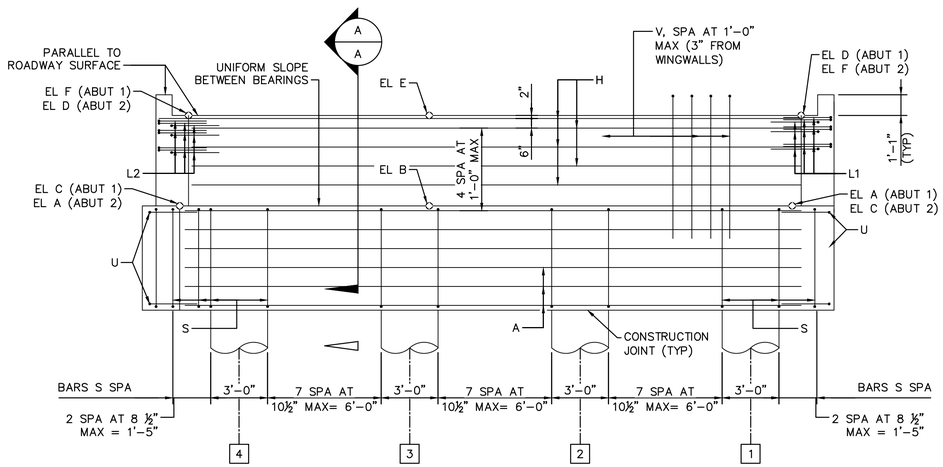


ELEVATION
(ABUTMENT 1 LOOKING BACKSTATION)
(ABUTMENT 8 OPPOSITE-HAND, LOOKING UPSTATION)

| BEARING SEAT ELEVATIONS | | | | |
|---|---|---|---|---|
| | GRDR 1 | GRDR 2 | GRDR 3 | GRDR 4 |
| ABUT 1 (FWD) | 561.610' | 561.874' | 562.077' | 561.981' |
| ABUT 2 (BK) | 562.260' | 562.418' | 562.515' | 562.313' |

| CONTROL ELEVATIONS | | | | | | |
|---|---|---|---|---|---|---|
| | TOP OF CAP | | | TOP OF BACKWALL | | |
| | EL A | EL B | EL C | EL D | EL E | EL F |
| ABUT 1 | 561.430' | 561.948' | 561.826' | 565.105' | 565.552' | 565.411' |
| ABUT 2 | 562.104' | 562.414' | 562.157' | 565.060' | 566.018' | 565.820' |

GENERAL NOTES:

1. BRIDGE DESIGNED FOR HL93 LOADING UNDER 2017 AASHTO LRFD SPECIFICATIONS AND INTERIM REVISIONS THERETO.
2. SEE BRIDGE LAYOUT FOR HEADER SLOPE AND FOUNDATION TYPE, SIZE, AND LENGTH.
3. SEE TxDOT STANDARD SHEET, COMMON FOUNDATION DETAILS (FD), FOR ALL FOUNDATION DETAILS AND NOTES.
4. SEE TxDOT STANDARD SHEET, CONCRETE RIPRAP (CRR), FOR RIPRAP ATTACHMENT DETAILS.
5. SEE TxDOT STANDARD SHEET, SHEAR KEY (IGSK), FOR ALL SHEAR KEY DETAILS AND NOTES.
6. SEE APPLICABLE RAIL DETAILS FOR RAIL ANCHORAGE IN WINGWALLS.
7. SHAFT LOAD = 102 TONS/SHAFT.

COVER DIMENSIONS ARE CLEAR DIMENSIONS, UNLESS NOTED OTHERWISE.

REINFORCING BAR DIMENSIONS SHOWN ARE OUT-TO-OUT OF BAR.

MATERIAL NOTES:

PROVIDE CLASS C (HPC) CONCRETE (f'c = 3600 psi).
PROVIDE GRADE 60 REINFORCING STEEL.
DRILLED SHAFT CONCRETE SHALL BE SULFATE-RESISTANT PER TXDOT SPEC. 421.4.A.1.

NOTES:

① INCREASE AS REQUIRED TO MAINTAIN 3" FROM FINISHED GRADE.

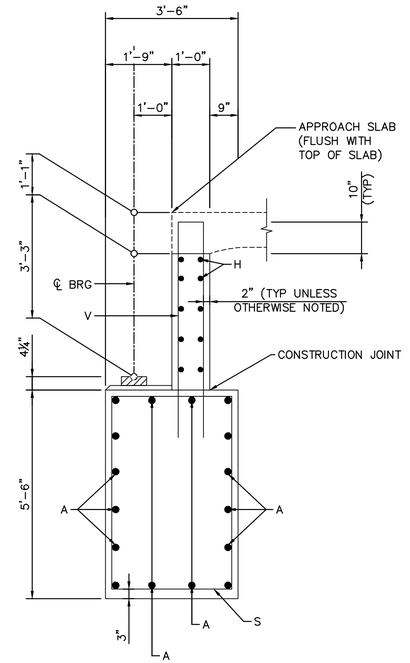


SECTION A-A

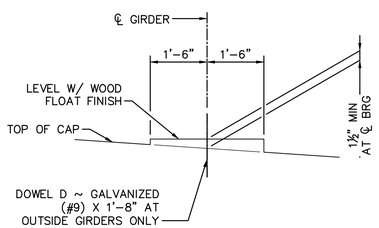


BEARING SEAT DETAIL
(BEARING SURFACE MUST BE CLEAN
AND FREE OF ALL LOOSE MATERIAL
BEFORE PLACING BEARING PAD)

811 Know what's **below.** **Call** before you dig.

PROJECT NO. XXXXX/ BID NO. XXXX-XXX

| No. | REVISIONS | DATE | BY |
|---|---|---|---|
| | | | |

Kimley»Horn
2201 WEST ROYAL LANE, SUITE 275, IRVING, TX 75063
PHONE: 214-420-5600
WWW.KIMLEY-HORN.COM
© 2021 KIMLEY-HORN AND ASSOCIATES, INC.
TEXAS REGISTERED ENGINEERING FIRM #F-928

STATE OF TEXAS
BRIAN J. LAFOY
89363
LICENSED
PROFESSIONAL ENGINEER
09/10/2021

KHA PROJECT 063543031
DATE 09/10/2021
SCALE AS SHOWN
DESIGNED BY BCS
DRAWN BY AT/TLS
CHECKED BY BJL

**TOWN OF ADDISON**
ALPHA ROAD CONN.
FROM FARMERS BRANCH
CREEK TO ALPHA ROAD

# STRUCTURAL
# ABUTMENT DETAILS
# SHEET 1 OF 2

SHEET NUMBER
C5.05

Plotted By: Turabi, Abuzar, September 10, 2021 - 08:19:07am K:\LAC_Civil\063543031_Addison_Alpha_Road_Connector\CADD\PlanSheets\Structures\S_Abutment Details.dwg
This document, together with the concepts and designs presented herein, as an instrument of service, is intended only for the specific purpose and client for which it was prepared. Reuse of and improper reliance on this document without written authorization and adaptation by Kimley-Horn and Associates, Inc. shall be without liability to Kimley-Horn and Associates, Inc.

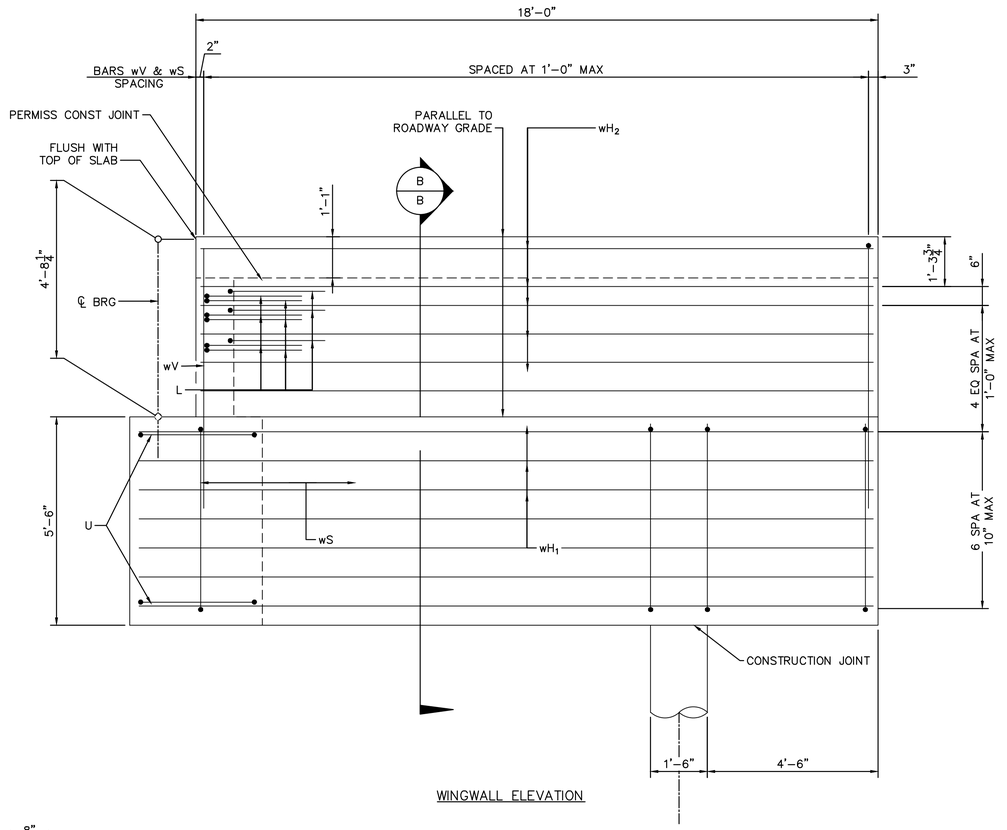


WINGWALL ELEVATION

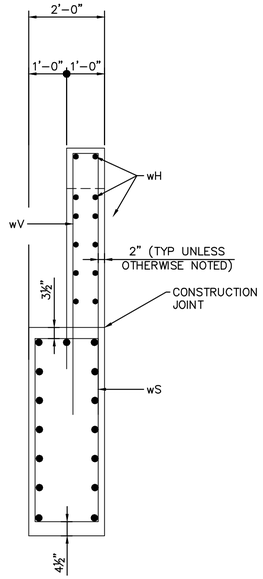


SECTION B-B

| TABLE OF ESTIMATED QUANTITIES (QUANTITIES SHOWN ARE FOR ONE ABUTMENT) | | | | |
|---|---|---|---|---|
| BAR | NO. | SIZE | LENGTH | WEIGHT |
| A | 16 | #11 | 32'-4" | 2,749 |
| H | 10 | #6 | 32'-4" | 486 |
| L1 | 9 | #6 | 5'-11" | 80 |
| L2 | 9 | #6 | 5'-9" | 78 |
| S | 30 | #5 | 11'-6" | 360 |
| U | 4 | #6 | 11'-7" | 70 |
| V | 35 | #5 | 13'-4" | 493 |
| wH1 | 14 | #6 | 19'-5" | 408 |
| wH2 | 24 | #6 | 17'-8" | 637 |
| wS | 38 | #4 | 7'-10" | 199 |
| wV | 38 | #5 | 13'-4" | 528 |
| REINFORCING STEEL * | | | LB | 6,007 |
| CLASS "C" (HPC) CONCRETE | | | CY | 28.6 |

* FOR CONTRACTOR'S INFORMATION ONLY

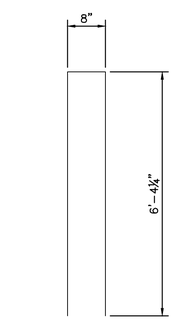


BARS V AND wV

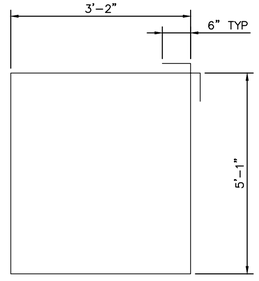


BARS S

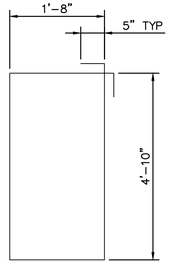


BARS wS

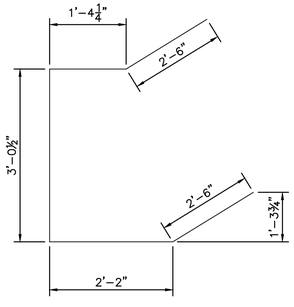


BARS U

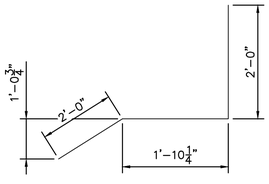


BARS L1

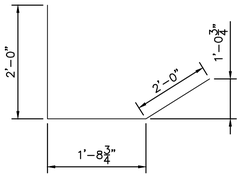


BARS L2

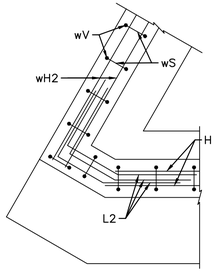


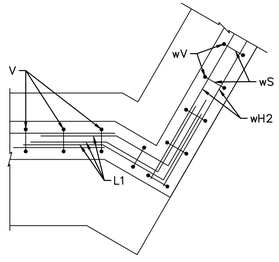


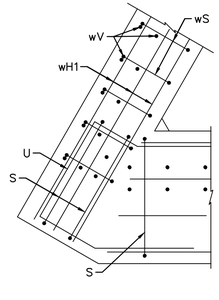


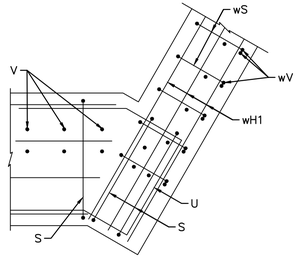


BACKWALL

CAP

CORNER DETAILS

Know what's **below.**
**Call** before you dig.

PROJECT NO. XXXXX/ BID NO. XXXX-XXX

| No. | REVISIONS | DATE | BY |
|---|---|---|---|
| | | | |


Kimley»Horn
2201 WEST ROYAL LANE, SUITE 275, IRVING, TX 75063
PHONE: 214-420-5600
WWW.KIMLEY-HORN.COM


© 2021 KIMLEY-HORN AND ASSOCIATES, INC.

TEXAS REGISTERED ENGINEERING FIRM #F-928

STATE OF TEXAS
BRIAN J. LAFOY
89363
LICENSED
PROFESSIONAL ENGINEER
09/10/2021

| | |
|---|---|
| KHA PROJECT | 063543031 |
| DATE | 09/10/2021 |
| SCALE | AS SHOWN |
| DESIGNED BY | BCS |
| DRAWN BY | AT/TLS |
| CHECKED BY | BJL |

**TOWN OF ADDISON**
ALPHA ROAD CONN.
FROM FARMERS BRANCH
CREEK TO ALPHA ROAD

STRUCTURAL
ABUTMENT DETAILS
SHEET 2 OF 2

SHEET NUMBER
C5.06


Plotted By: Turabi, Abuzar September 10, 2021 08:19:09am K:\LAC_Civil\063543031_Addison_Alpha_Road_Connector\CADD\PlanSheets\Structures\S_Abutment Details.dwg
This document, together with the concepts and designs presented herein, as an instrument of service, is intended only for the specific purpose and client for which it was prepared. Reuse of and improper reliance on this document without written authorization and adaptation by Kimley-Horn and Associates, Inc. shall be without liability to Kimley-Horn and Associates, Inc.

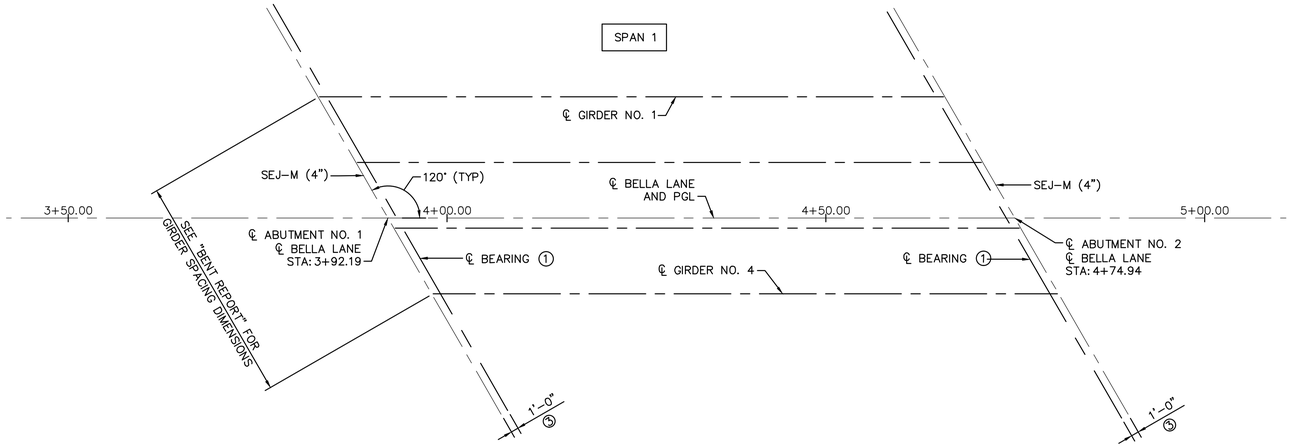


PLAN
SCALE: 1" = 10'-0"

BENT REPORT
BENT NO. 1 (S 59 38 39.36 W)
DISTANCE BETWEEN STATION LINE AND BEAM 1, 18.475 L

| | | | BEAM SPAC. (C.L. BENT) | BEAM ANGLE D | M | S |
|---|---|---|---|---|---|---|
| SPAN 1 | BEAM | 1 | 0.000 | 60 | 0 | 0 |
| | BEAM | 2 | 10.007 | 60 | 0 | 0 |
| | BEAM | 3 | 10.007 | 60 | 0 | 0 |
| | BEAM | 4 | 10.007 | 60 | 0 | 0 |
| | | | TOTAL 30.022 | | | |

BENT REPORT
BENT NO. 2 (S 59 38 39.36 W)
DISTANCE BETWEEN STATION LINE AND BEAM 1, 18.475 L

| | | | BEAM SPAC. (C.L. BENT) | BEAM ANGLE D | M | S |
|---|---|---|---|---|---|---|
| SPAN 1 | BEAM | 1 | 0.000 | 60 | 0 | 0 |
| | BEAM | 2 | 10.007 | 60 | 0 | 0 |
| | BEAM | 3 | 10.007 | 60 | 0 | 0 |
| | BEAM | 4 | 10.007 | 60 | 0 | 0 |
| | | | TOTAL 30.022 | | | |

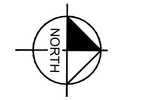


NOTES

1. SEE IGEB FOR BEARING & GIRDER END DETAILS
2. BEAM LENGTHS SHOWN ARE BOTTOM OF BEAM FLANGE LENGTHS WITH ADJUSTMENTS MADE FOR BEAM SLOPE.
3. MEASURED 60° PERPENDICULAR TO FACE OF BACKWALL. SEE IGEB STNADARD FOR ADDITIONAL INFORMATION.

Know what's below.
Call before you dig.

| No. | REVISIONS | DATE | BY |
|---|---|---|---|
| | | | |

PROJECT NO. XXXXX/ BID NO. XXXX–XXX

Kimley»Horn
2201 WEST ROYAL LANE, SUITE 275, IRVING, TX 75063
PHONE: 214-420-5600
WWW.KIMLEY-HORN.COM
© 2021 KIMLEY-HORN AND ASSOCIATES, INC.
TEXAS REGISTERED ENGINEERING FIRM #F-928

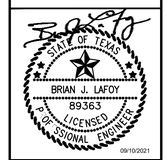


| | |
|---|---|
| KHA PROJECT | 063543031 |
| DATE | 09/10/2021 |
| SCALE | AS SHOWN |
| DESIGNED BY | BCS |
| DRAWN BY | AT/TLS |
| CHECKED BY | BJL |

**TOWN OF ADDISON**
ALPHA ROAD CONN.
FROM FARMERS BRANCH
CREEK TO ALPHA ROAD

STRUCTURAL
FRAMING PLAN

SHEET NUMBER
C5.07

Plotted By: Turabi, Abuzar September 10, 2021 08:19:31am K:\LAC_Civil\063543031_Addison_Alpha_Road_Connector\CADD\PlanSheets\Structures\7_Framing Plan.dwg
This document, together with the concepts and designs presented herein, as an instrument of service, is prepared only for the specific purpose and client for which it was prepared. Reuse of and improper reliance on this document without written authorization and adaptation by Kimley-Horn and Associates, Inc. shall be without liability to Kimley-Horn and Associates, Inc.

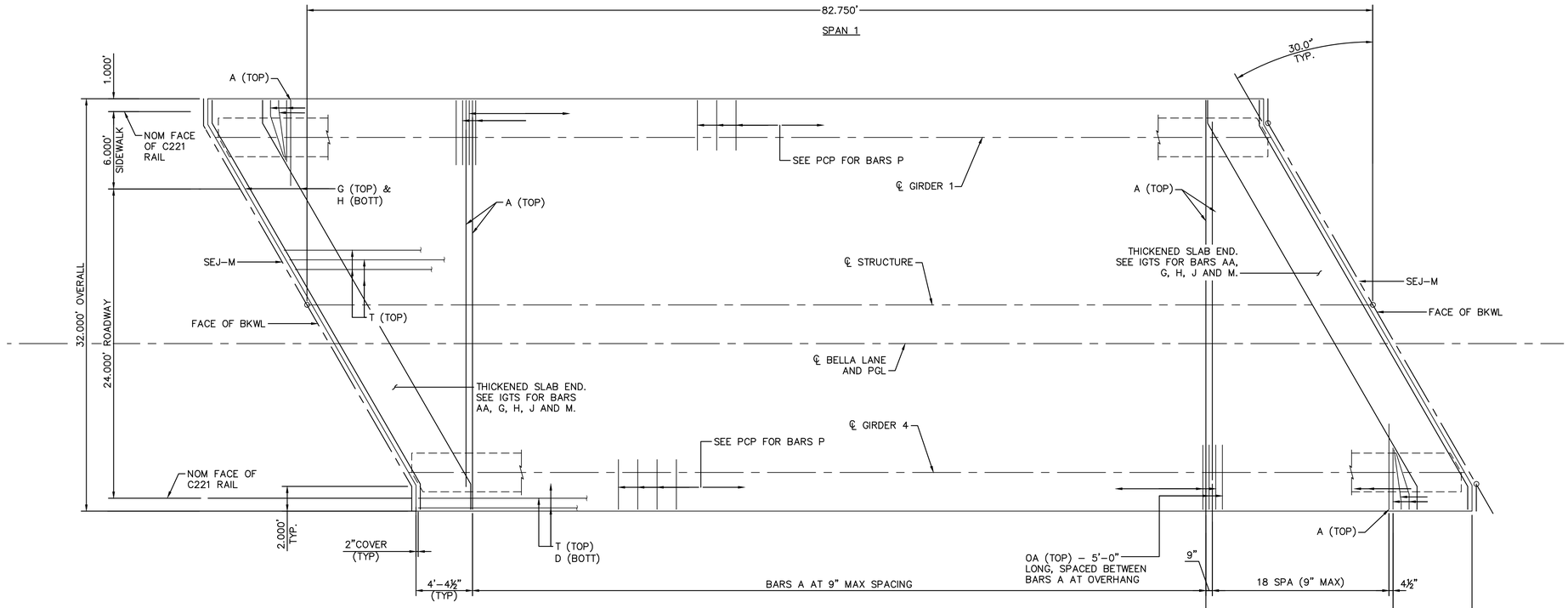


PLAN

NORTH

GRAPHIC SCALE IN FEET
0 2.5 5 10

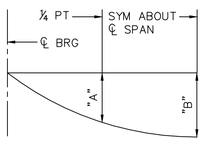


DEAD LOAD DEFLECTION DIAGRAM

CALCULATED DEFLECTIONS SHOWN ARE DUE TO THE CONCRETE SLAB ONLY (Ec = 5000 KSI). ADJUST VALUES AS REQUIRED FOR EXTERIOR GIRDERS AND IF OPTIONAL SLAB FORMING IS USED. THESE VALUES MAY REQUIRE FIELD VERIFICATION.

| DEAD LOAD DEFLECTION TABLE | | |
|---|---|---|
| | "A" | "B" |
| | FT | FT |
| SPAN 1 | 0.040 | 0.057 |

| BAR TABLE | |
|---|---|
| BAR | SIZE |
| A | #4 |
| AA | #5 |
| D | #4 |
| G | #4 |
| H | #4 |
| J | #4 |
| K | #4 |
| M | #4 |
| OA | #5 |
| P | #4 |
| T | #4 |

| TABLE OF ESTIMATED QUANTITIES | | | |
|---|---|---|---|
| SPAN NO. | REINF CONCRETE SLAB | PRESTRESSED CONCRETE GIRDERS (Tx40) ① | TOTAL REINF STEEL** ② |
| | SF | LF | LB |
| 1 | 2,648 | 329 | 6,091 |

① BEAM LENGTHS SHOWN ARE BOTTOM OF BEAM FLANGE LENGTHS WITH ADJUSTMENTS MADE FOR BEAM SLOPE.

② REINFORCING STEEL WEIGHT IS CALCULATED USING AN APPROXIMATE FACTOR OF 2.3 LBS/SF.

** QUANTITY FOR CONTRACTOR'S INFORMATION ONLY.

NOTES
1. BRIDGE DESIGNED FOR HL93 LOADING UNDER 2017 AASHTO LRFD SPECIFICATIONS AND INTERIM REVISIONS THERETO.
2. SEE IGTS STANDARD FOR THICKENED SLAB END DETAILS AND QUANTITY ADJUSTMENTS.
3. SEE PCP AND PCP-FAB STANDARDS FOR PANEL DETAILS NOT SHOWN.
4. SEE PMDF STANDARD FOR DETAILS AND QUANTITY ADJUSTMENTS IF THIS OPTION IS USED.
5. SEE IGMS STANDARD FOR MISCELLANEOUS DETAILS.
6. SEE C221 RAIL STANDARD FOR RAIL ANCHORAGE IN SLAB.
7. COVER DIMENSIONS ARE CLEAR DIMENSIONS, UNLESS NOTED OTHERWISE.

MATERIAL NOTES
1. CONCRETE SHALL BE CLASS S (HPC) (f'c = 4,000 PSI).
2. ALL DECK REINFORCING SHALL BE EPOXY COATED GRADE 60 STEEL.
3. BAR LAPS, WHERE REQUIRED, SHALL BE QAS FOLLOWS:
   EPOXY COATED ~#4 = 2'-2"
   ~#5 = 2'-9"

Know what's **below.**
**Call** before you dig.

| No. | REVISIONS | DATE | BY |
|---|---|---|---|
| | | | |

PROJECT NO. XXXXX/ BID NO. XXXX-XXX

Kimley»Horn
2201 WEST ROYAL LANE, SUITE 275, IRVING, TX 75063
PHONE: 214-420-5600
WWW.KIMLEY-HORN.COM
© 2021 KIMLEY-HORN AND ASSOCIATES, INC.
TEXAS REGISTERED ENGINEERING FIRM #F-928

STATE OF TEXAS
BRIAN J. LAFOY
89363
LICENSED
PROFESSIONAL ENGINEER
09/10/2021

| KHA PROJECT 063543031 | DATE 09/10/2021 | SCALE AS SHOWN | DESIGNED BY BCS |
|---|---|---|---|
| | | DRAWN BY AT/TLS | CHECKED BY BJL |

**TOWN OF ADDISON**
ALPHA ROAD CONN.
FROM FARMERS BRANCH CREEK TO ALPHA ROAD

STRUCTURAL
SLAB DETAILS

SHEET NUMBER
C5.08

Plotted By: Turabi, Abuzar September 10, 2021 08:20:09am K:\LAC_Civil\063543031_Addison_Alpha_Road_Connection\CADD\PlanSheets\Structures\8_Slab Details.dwg
This document, together with the concepts and designs presented herein, as an instrument of service, is intended only for the specific purpose and client for which it was prepared. Reuse of and improper reliance on this document without written authorization and adaptation by Kimley-Horn and Associates, Inc. shall be without liability to Kimley-Horn and Associates, Inc.

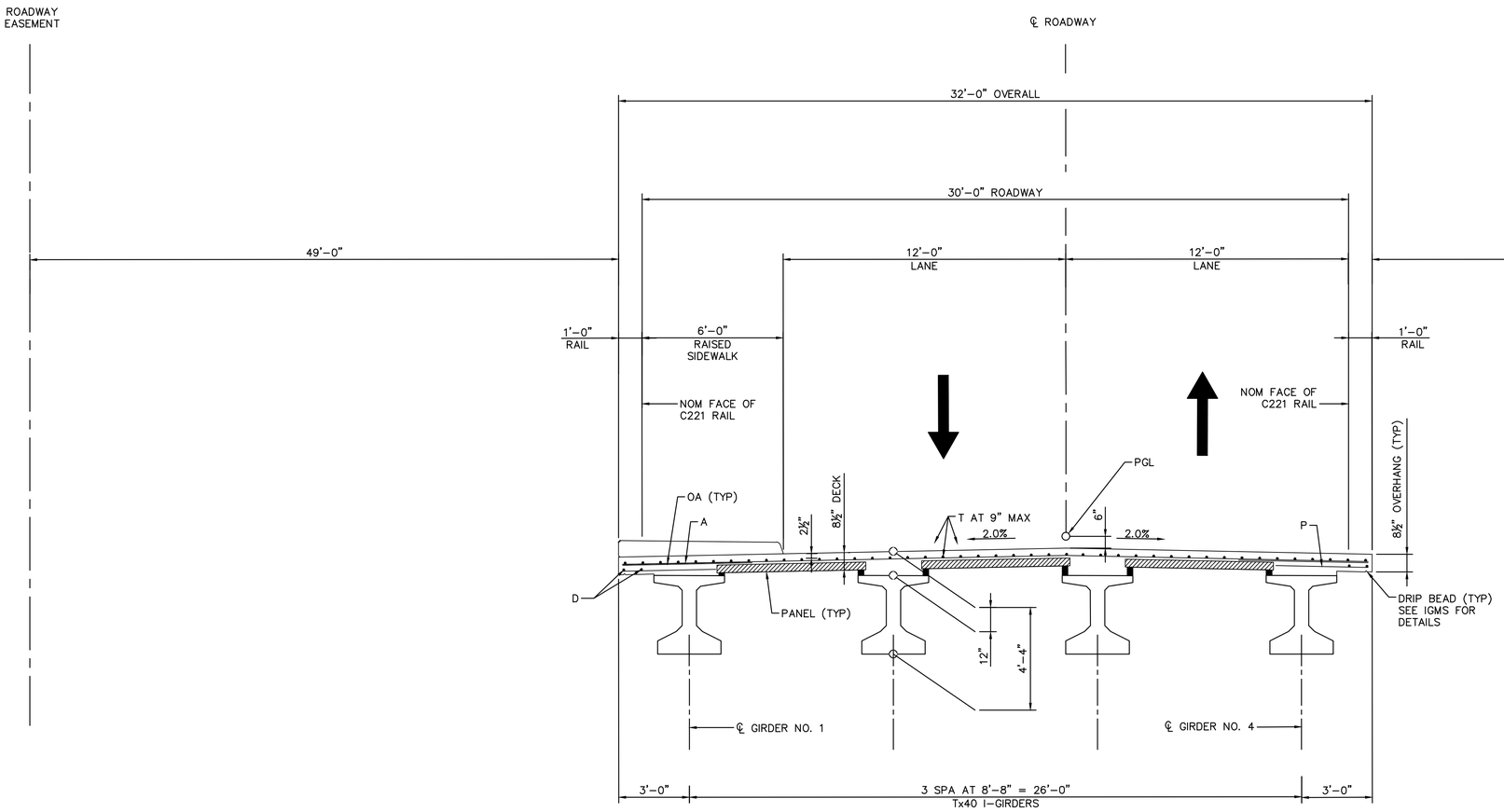


TYPICAL TRANSVERSE SECTION

Know what's **below.**
**Call** before you dig.

| No. | REVISIONS | DATE | BY |
|---|---|---|---|
| | | | |

PROJECT NO. XXXXX/ BID NO. XXXX–XXX


Kimley»Horn
2201 WEST ROYAL LANE, SUITE 275, IRVING, TX 75063
PHONE: 214-420-5600
WWW.KIMLEY-HORN.COM


© 2021 KIMLEY-HORN AND ASSOCIATES, INC.

TEXAS REGISTERED ENGINEERING FIRM #F-928

STATE OF TEXAS
BRIAN J. LAFOY
89363
LICENSED
PROFESSIONAL ENGINEER
09/10/2021

| | |
|---|---|
| KHA PROJECT | 063543031 |
| DATE | 09/10/2021 |
| SCALE | AS SHOWN |
| DESIGNED BY | BCS |
| DRAWN BY | AT/TLS |
| CHECKED BY | BJL |

**TOWN OF ADDISON**
ALPHA ROAD CONN.
FROM FARMERS BRANCH CREEK TO ALPHA ROAD

# STRUCTURAL TRANSVERSE SECTION

SHEET NUMBER
C5.09


Plotted By: Turabi, Abuzar September 10, 2021 08:20:20am K:\JAC_Civil\063543031_Addison_Alpha_Road_Connector\CADD\PlanSheets\Structures\9_Typ Transverse Section.dwg
This document, together with the concepts and designs presented herein, as an instrument of service, is intended only for the specific purpose and client for which it was prepared. Reuse of and improper reliance on this document without written authorization and adaptation by Kimley-Horn and Associates, Inc. shall be without liability to Kimley-Horn and Associates, Inc.

DISCLAIMER:
The use of this standard is governed by the "Texas Engineering Practice Act". No warranty of any kind is made by TxDOT for any purpose whatsoever. TxDOT assumes no responsibility for the conversion of this standard to other formats or for incorrect results or damages resulting from its use.

| STRUCTURE | DESIGNED GIRDERS | | | | | | | | | DEPRESSED STRAND PATTERN | | CONCRETE | | OPTIONAL DESIGN | | | | |
|---|---|---|---|---|---|---|---|---|---|---|---|---|---|---|---|---|---|---|
| | SPAN NO. | GIRDER NO. | GIRDER TYPE | PRESTRESSING STRANDS | | | | | | NO. | TO END (in) | RELEASE STRGTH (1) f'ci (ksi) | MINIMUM 28 DAY COMP STRGTH f'c (ksi) | DESIGN LOAD COMP STRESS (TOP ℄) (SERVICE I) fct(ksi) | DESIGN LOAD TENSILE STRESS (BOTT ℄) (SERVICE III) fcb(ksi) | REQUIRED MINIMUM ULTIMATE MOMENT CAPACITY (STRENGTH I) (kip-ft) | LIVE LOAD DISTRIBUTION FACTOR (2) | |
| | | | | NON-STD STRAND PATTERN | TOTAL NO. | SIZE (in) | STRGTH fpu (ksi) | "e" ℄ (in) | "e" END (in) | | | | | | | | Moment | Shear |
| BELLA LANE | 1 | ALL | TX 40 | | 30 | 0.600 | 270 | 14.40 | 8.80 | 6 | 6.50 | 5.000 | 5.900 | 3.148 | -3.705 | 4580.06 | 0.657 | 0.960 |

## NON-STANDARD STRAND PATTERNS

| PATTERN | STRAND ARRANGEMENT AT ℄ OF GIRDER |
|---|---|
| | |
| | |
| | |
| | |
| | |
| | |

(1) Based on the following allowable stresses (ksi):

Compression = 0.65 f'ci

Tension = $0.24\sqrt{f'ci}$

Optional designs must likewise conform.

(2) Portion of full HL93.

### DESIGN NOTES:

Designed according to AASHTO LRFD Bridge Design Specifications.

Optional designs for girders 120 feet or longer must have a calculated residual camber equal to or greater than that of the designed girder.

Prestress losses for the designed girders have been calculated for a relative humidity of 60 percent. Optional designs must likewise conform.

### FABRICATION NOTES:

Provide Class H concrete.

Provide Grade 60 reinforcing steel bars.

Use low relaxation strands, each pretensioned to 75 percent of fpu.

Strand debonding must comply with Item 424.4.2.2.2.4. Full-length debonded strands are only permitted in positions marked △. Double wrap full-length debonded strands in outer most position of each row.

When shown on this sheet, the Fabricator has the option of furnishing either the designed girder or an approved optional design. All optional design submittals must be signed, sealed and dated by a Professional Engineer registered in the State of Texas.

Seal cracks in girder ends exceeding 0.005" in width as directed by the Engineer. The fabricator is permitted to decrease the spacing of Bars R and S by providing additional bars to help limit crack width provided the decreased spacing results in no less than 1" clear between bars. The fabricator must take an approved corrective action if cracks greater than 0.005" form on a repetitive basis.

### DEPRESSED STRAND DESIGNS:

Locate strands for the designed girder as low as possible on the 2" grid system unless a non-standard strand pattern is indicated. Fill row "2.5", then row "4.5", then row "6.5", etc., beginning each row in the "A" position and working outward until the required number of strands is reached. All strands in the "A" position must be depressed, maintaining the 2" spacing so that, at the girder ends, the upper two strands are in the position shown in the table.

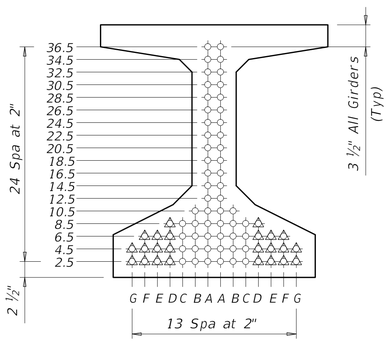


TYPE Tx40




HL93 LOADING

Texas Department of Transportation

Bridge Division Standard

# BELLA LANE I-GIRDER DESIGNS (NON-STANDARD SPANS)

IGND

| FILE: | DN: _TxDOT_ | CK: TxDOT | DW: AT | CK: RCL |
|---|---|---|---|---|
| ©TxDOT August 2017 | CONT | SECT | JOB | HIGHWAY |
| REVISIONS 10-19: Modified for depressed strands only. | | | | |
| | DIST | COUNTY | | SHEET NO. |
| | | | | C5.10 |

DISCLAIMER:
The use of this standard is governed by the "Texas Engineering Practice Act". No warranty of any kind is made by TxDOT for any purpose whatsoever. TxDOT assumes no responsibility for the conversion of this standard to other formats or for incorrect results or damages resulting from its use.

DATE:
FILE:

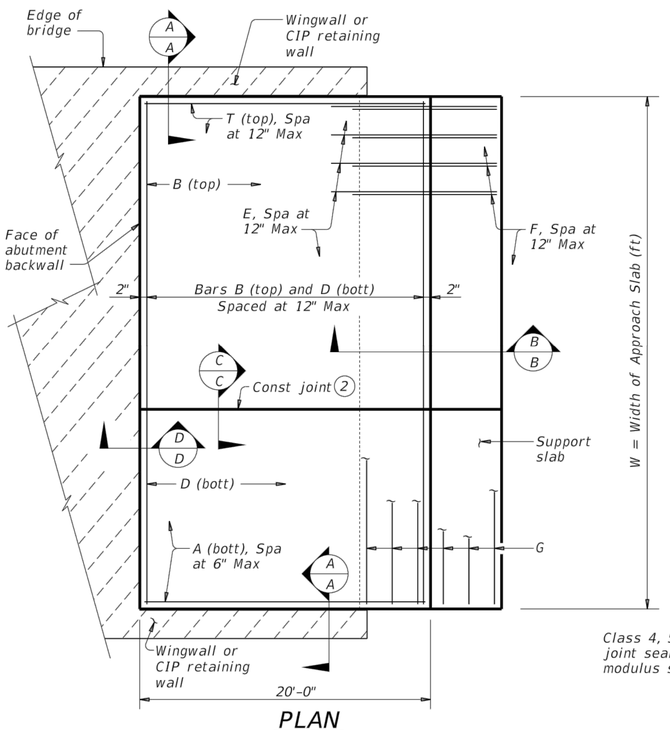


PLAN

(Showing non-skewed approach slab.)

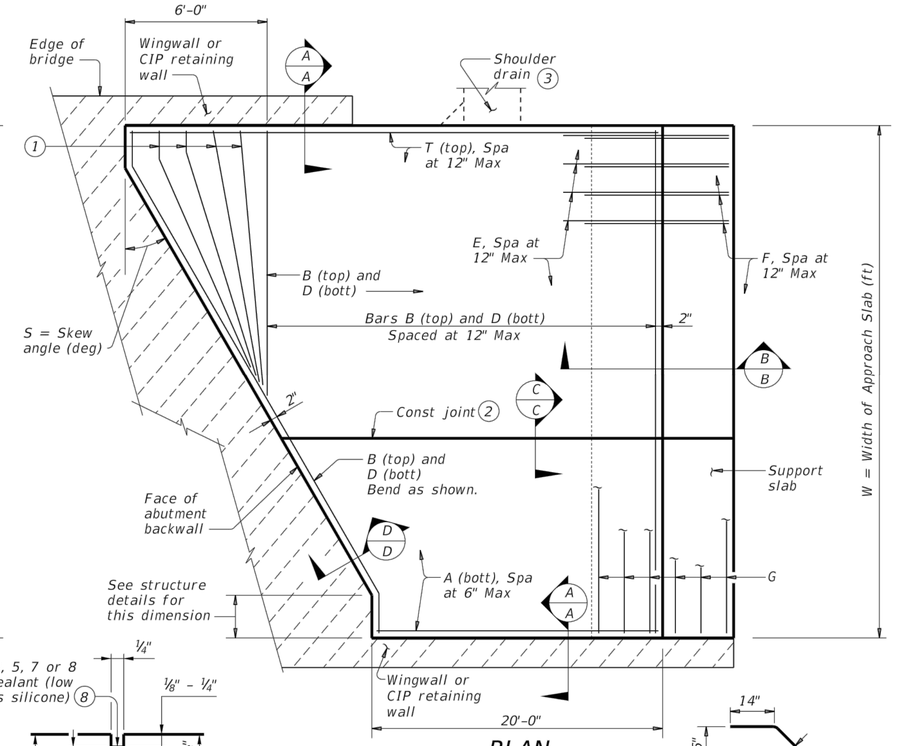


PLAN

(Showing skewed approach slab.)

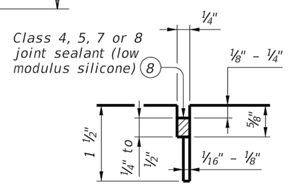


LONGITUDINAL SAW CUT JOINT DETAIL

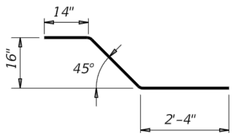


BARS E (#5)

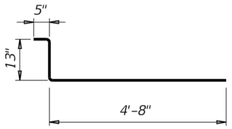


BARS F (#5)

| BAR TABLE | |
|---|---|
| BAR | SIZE |
| A | #8 |
| B | #5 |
| D | #5 |
| E | #5 |
| F | #5 |
| G | #5 |
| T | #5 |

## APPROXIMATE QUANTITIES (4)

Reinf steel weight = 8.5 Lbs/SF of Approach Slab
= 18.4 Lbs/LF of Support Slab

Vol of Appr Slab Conc (CY) = 1.057W – 0.008W x T + 0.02W² Tan S
(Includes Support Slab)

W = Width of Approach Slab (ft)

T = Conc Pavement Thickness (in)

S = Skew Angle (deg)

(1) Flare Bars B and D in this region (1'-6" Max Spa, 3" Min Spa). Minimum flared bar length = 2'-6". Bend bars as necessary.

(2) Provide longitudinal construction joints that align with longitudinal construction joints in the bridge slab with bridges built in stages. Other longitudinal construction joints must receive approval of the Engineer.

(3) See details elsewhere in plans for shoulder drain location and details.

(4) For Contractor's information only. Quantities shown are for one approach slab only.

(5) On portion of support slab that supports the concrete pavement, adjust top surface elevation, if required, to accommodate concrete pavement thickness. Smooth trowel finish. Oil top of support slab with 60 grade oil and apply heavy coat of powdered graphite. Press down one layer of 30# roofing felt.

(6) Multiple piece tie bars are acceptable at longitudinal construction joints provided minimum laps shown are achieved.

(7) See details elsewhere in plans for required cross-slope.

(8) Place in accordance with Item 438.

(9) Provide backer rod that is 25% larger than joint opening and compatible with the sealant.

(10) If bridge rail is present at the wingwall or CIP retaining wall, place ½" rebonded recycled tire rubber between concrete railing and top of approach slab as shown when concrete railing projects over the approach slab.

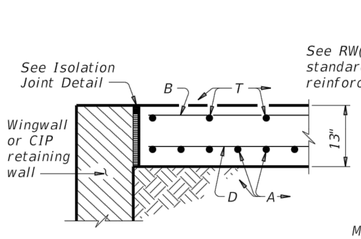


SHOWING WINGWALL OR CIP RETAINING WALL

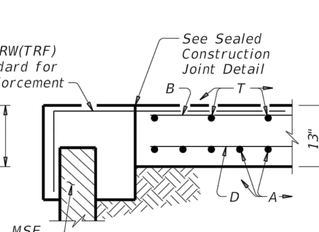


SHOWING MSE WALL

SECTION A-A

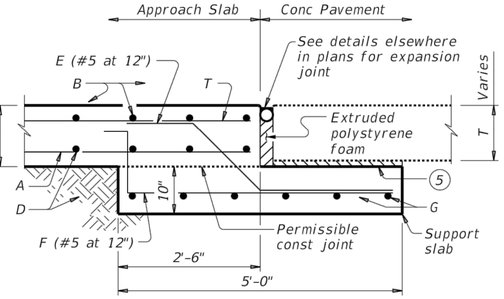


SECTION B-B

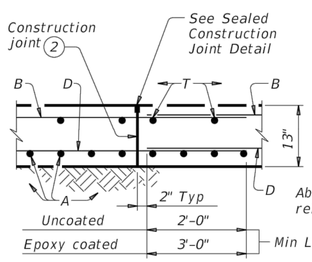


SECTION C-C (6)

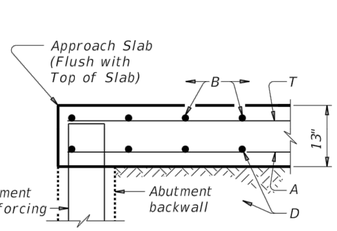


SECTION D-D

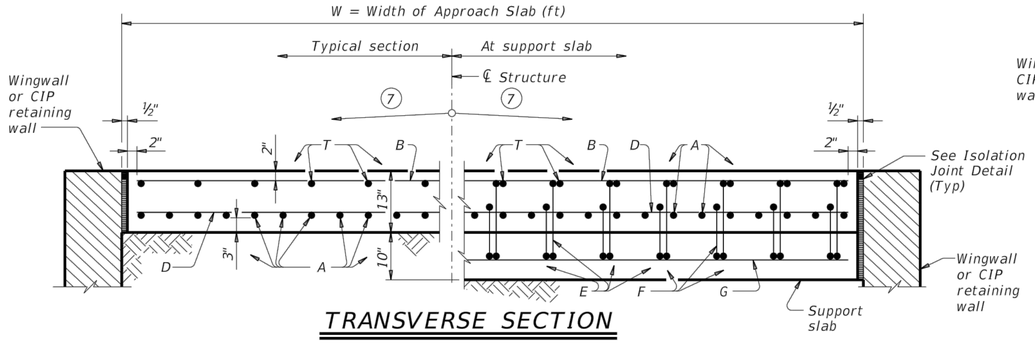


TRANSVERSE SECTION

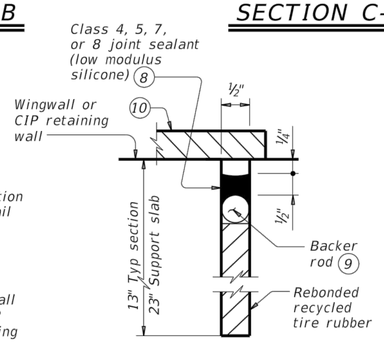


ISOLATION JOINT DETAIL

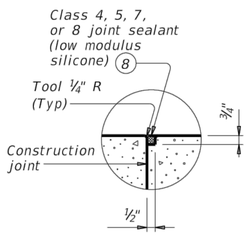


SEALED CONSTRUCTION JOINT DETAIL

### GENERAL NOTES:

Construct approach slab in accordance with Item 422.

Provide Class "S" concrete with a minimum compressive strength of 4,000 psi.

Provide Grade 60 reinforcing steel.

Provide longitudinal joints as shown on the Longitudinal Saw Cut Joint Detail at lane lines and shoulders when width between longitudinal construction joints or edges of approach slab exceeds 16 feet. Saw cut joints within 24 hours of concrete placement to a depth of 1 ½" and seal in accordance with Item 438. Alternately, provide a controlled joint consisting of 1 ½" vinyl or plastic joint former (Stress Cap, Zip Strip, Stress Lock, or equal as approved by the Engineer.)

Provide rebonded recycled tire rubber joint filler that meets the requirements of DMS-6310, "Joint Sealants and Fillers."

Construct the subgrade or subbase away from the bridge for a minimum distance of 100 feet prior to the approach slab, unless otherwise indicated on the plans.

Compact and finish the subgrade or foundation for the approach slab to the typical cross-section and to the lines and grades shown on the plans.

Cure for 4 days using water or membrane curing per Item 422.

All details shown herein are subsidiary to bridge approach slab.

Cover dimensions are clear dimensions, unless noted otherwise. Reinforcing bar dimensions shown are out-to-out of bar.

Texas Department of Transportation

Bridge Division Standard

# BRIDGE APPROACH SLAB

## CONCRETE PAVEMENT

## BAS-C

| FILE: bascste1-20.dgn | DN: TxDOT | CK: TxDOT | DW: TxDOT | CK: TxDOT |
|---|---|---|---|---|
| ©TxDOT April 2019 | CONT | SECT | JOB | HIGHWAY |
| REVISIONS | | | | |
| 02-20: Removed stress relieving pad. | DIST | COUNTY | | SHEET NO. |
| | | | | C5.11 |

DISCLAIMER:
The use of this standard is governed by the "Texas Engineering Practice Act". No warranty of any kind is made by TxDOT for any purpose whatsoever. TxDOT assumes no responsibility for the conversion of this standard to other formats or for incorrect results or damages resulting from its use.

DATE:
FILE:

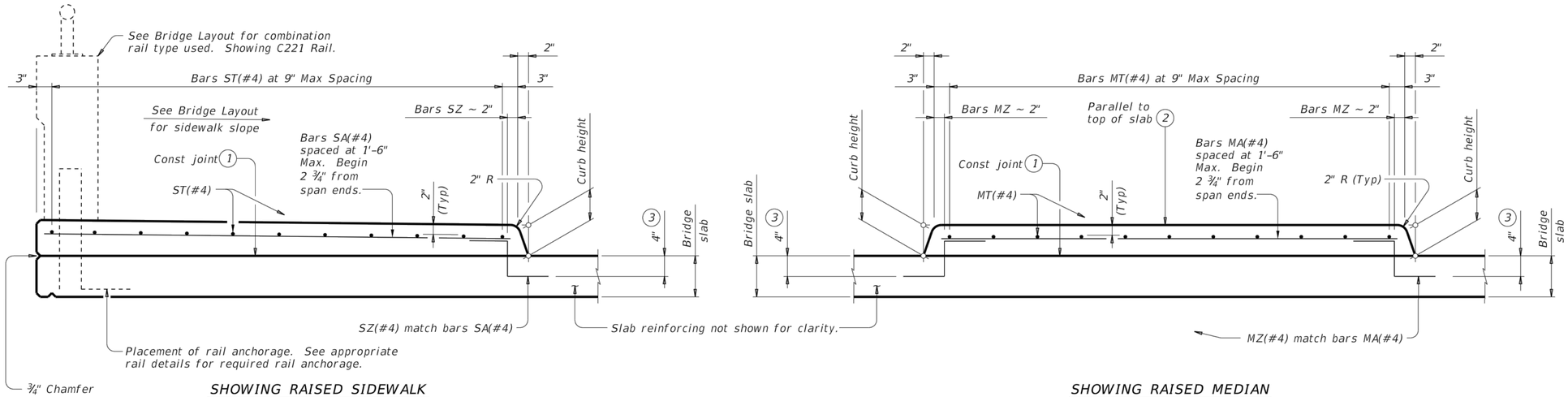


## TYPICAL TRANSVERSE SECTIONS

See Span Details for dimensions not shown.

1. Provide broom finish to top of bridge slab where raised sidewalk or raised median area is defined.
2. Unless noted otherwise on the span details.
3. Bars may rest on top of PCPs.

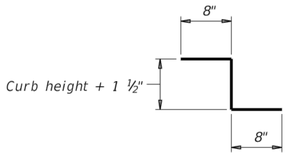


BARS SZ(#4) AND MZ(#4)

| APPROVED SLIP RESISTANT PLATE | |
|---|---|
| Product | Manufacturer Website |
| Algrip™, Steel | www.algrip.com |
| Mebac® #3, Steel | www.harscoikg.com |
| SlipNOT® Grade 2, Steel | www.slipnot.com |

Provide drain cover plates fabricated with a product from this list. No exceptions are permitted.

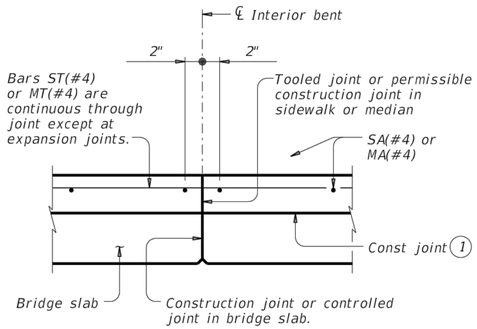


### LONGITUDINAL SECTION AT INTERIOR BENT

At bents with expansion joints, provide an open joint in the sidewalk/median matching the deck's joint width.

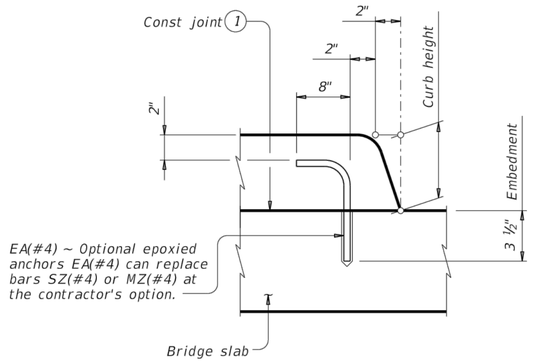


### OPTIONAL EPOXY ANCHORS

Embed EA(#4) bar into concrete with a Type III (Class C, D, E, or F) epoxy meeting the requirements of DMS-6100, "Epoxies and Adhesives". Follow manufacturer's directions for installing the epoxied anchor bars.

### MATERIAL NOTES:

Provide the same concrete required for the bridge deck, Class S or Class S (HPC) concrete.

Provide Grade 60 reinforcing steel. Deformed welded wire reinforcement (WWR) meeting ASTM A1064 of equivalent size and spacing may be substituted for bars SA, ST, MA, and MT.

Provide epoxy coat or galvanize reinforcement if bridge deck reinforcement is required to be epoxy coated or galvanized.

Provide hot-dip galvanize slip resistant steel plate after fabrication in accordance with Item 445, "Galvanizing". Chamfer or round edges approximately 1/16" prior to galvanizing.

### GENERAL NOTES:

Designed according to AASHTO LRFD Bridge Design Specifications.

Provide the following bar or wire lap lengths when required:
- Uncoated, 1'-7" Min
- Coated, 2'-5" Min

Submittal and approval of drain cover plate shop drawings is not required if fabrication is accordance with these details.

Raised sidewalks will be paid under Item 422 by the SF of Bridge Sidewalk or Bridge Sidewalk (HPC). Raised medians will be paid under Item 422 by the SF of Bridge Median or Bridge Median (HPC).

Payment for drain cover plates will be by the pound of "Structural Steel (Misc Non-Bridge)" as per Item 442, "Metal for Structures". Weight of one drain cover plate is 48 plf.

### DESIGNER NOTES:

These details do not apply for longitudinal grades exceeding 5 percent.

Cover dimensions are clear dimensions, unless noted otherwise.

Reinforcing bar dimensions shown are out-to-out of bar.



Texas Department of Transportation

Bridge Division Standard

# BRIDGE RAISED SIDEWALK AND MEDIAN DETAILS

## BRSM

| FILE: brsmste1-19.dgn | DN: JMH | CK: TxDOT | DW: JTR | CK: TxDOT |
|---|---|---|---|---|
| ©TxDOT April 2019 | CONT | SECT | JOB | HIGHWAY |
| REVISIONS | | | | |
| | DIST | COUNTY | | SHEET NO. |
| | | | | C5.12 |

DISCLAIMER:
The use of this standard is governed by the "Texas Engineering Practice Act". No warranty of any kind is made by TxDOT for any purpose whatsoever. TxDOT assumes no responsibility for the conversion of this standard to other formats or for incorrect results or damages resulting from its use.

DATE:
FILE:

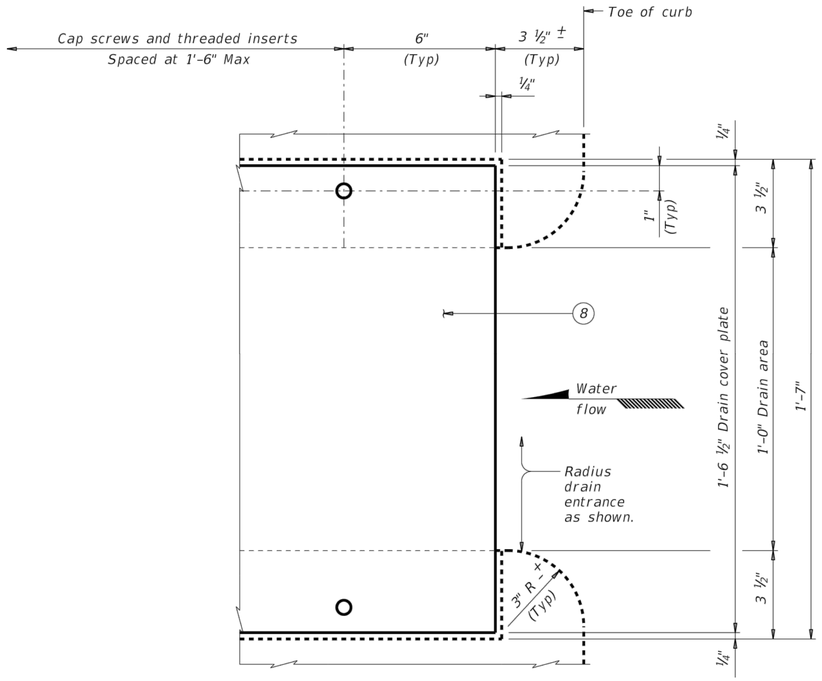


## PARTIAL PLAN CURB DRAIN

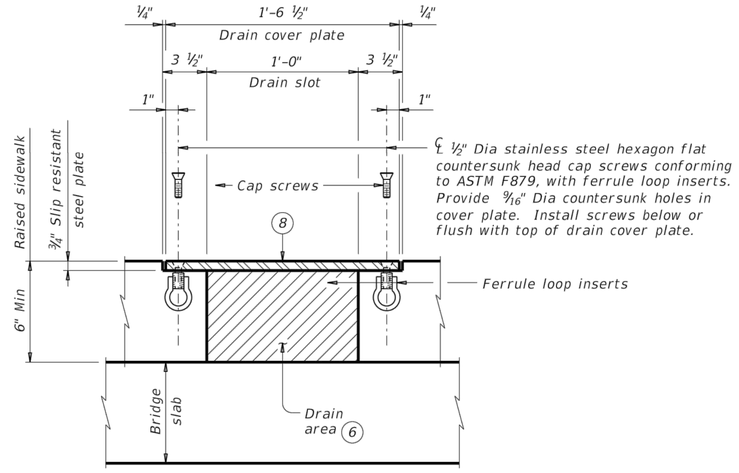


## SECTION B-B

*Reinforcing not shown for clarity.*

1. Provide broom finish to top of bridge slab where raised sidewalk or raised median area is defined.
4. 3'-0" Min at deck expansion joints, deck construction joints or controlled joints, rail intermediate wall joints or from face of substructure.
5. For rail Type C1W, center drain slots between posts.
6. Steel trowel top surface of bridge deck in drain locations.
7. Provide sidewalk drains where shown elsewhere on the plans or as directed by the Engineer. Do not place drains over railroad tracks, lower roadways, or sidewalks. Place drain and cover plate perpendicular to toe of rail.
8. Drain cover plate (PL ¾ x 18 ½ slip resistant steel plate). Install flush with top of sidewalk.

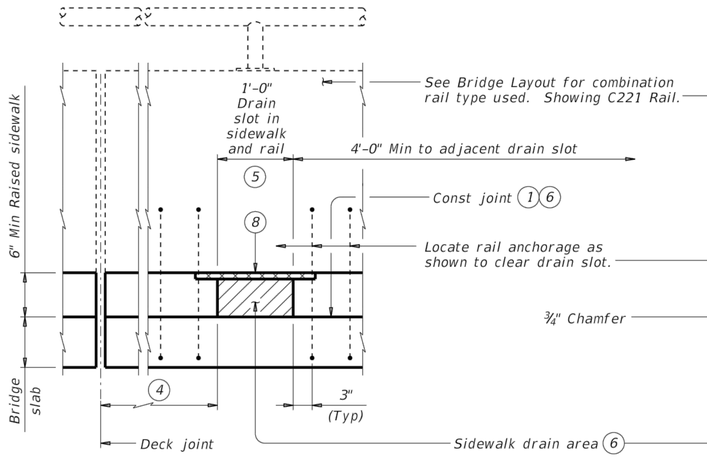


## SECTION A-A

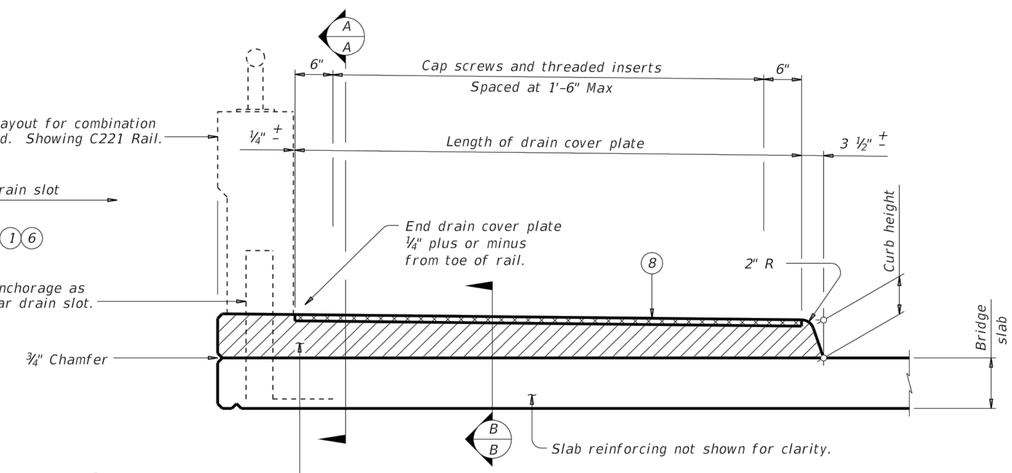


## SHOWING RAISED SIDEWALK WITH DRAIN SLOT

# OPTIONAL DRAIN DETAILS 7

SHEET 2 OF 2

Texas Department of Transportation

Bridge Division Standard

# BRIDGE RAISED SIDEWALK AND MEDIAN DETAILS

## BRSM

| FILE: brsmste1-19.dgn | DN: JMH | CK: TxDOT | DW: JTR | CK: TxDOT |
|---|---|---|---|---|
| ©TxDOT April 2019 | CONT | SECT | JOB | HIGHWAY |
| REVISIONS | | | | |
| | DIST | COUNTY | | SHEET NO. |
| | | | | C5.13 |

DISCLAIMER:
The use of this standard is governed by the "Texas Engineering Practice Act". No warranty of any kind is made by TxDOT for any purpose whatsoever. TxDOT assumes no responsibility for the conversion of this standard to other formats or for incorrect results or damages resulting from its use.

DATE:
FILE:

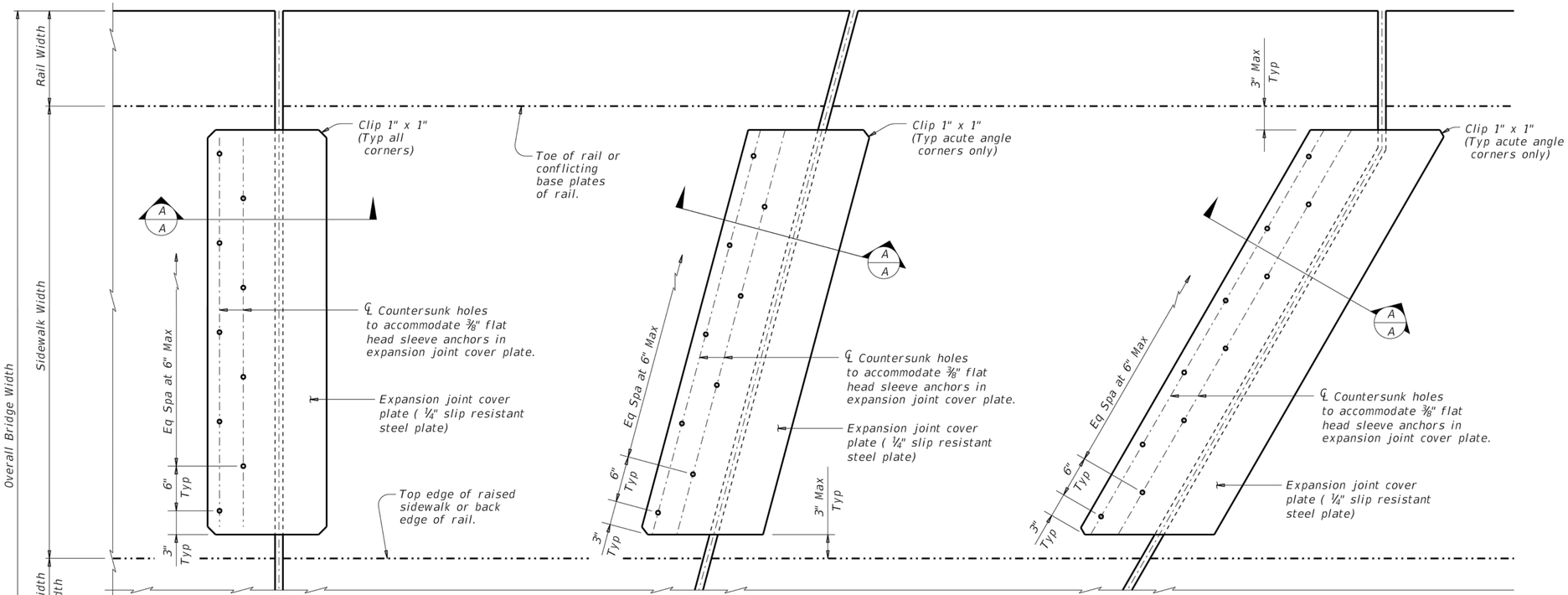


NO SKEW

SKEW WITHOUT SLAB BREAKBACK

SKEW WITH SLAB BREAKBACK

## PLAN

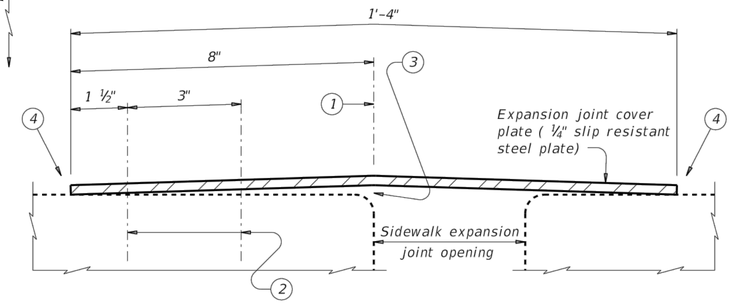


SHOWING LEVEL EXP JOINT

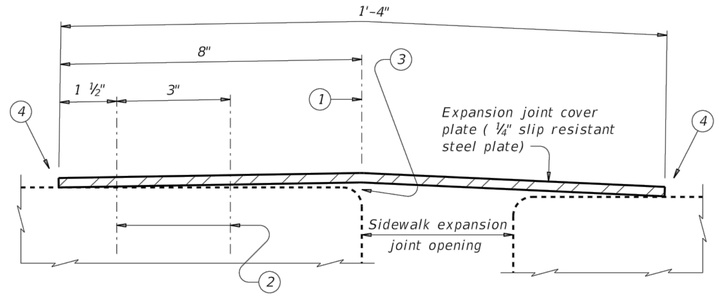


SHOWING UNLEVEL EXP JOINT
(Install sleeve anchors on high side of expansion joint)

## SECTION A-A

1. ℄ Expansion joint cover plate and edge of expansion joint.
2. ℄ ⅜" x 2 ½" Min, Flat Head Sleeve Anchors, Stainless Steel. Countersink Flat Head Sleeve Anchors in ¼" Slip Resistant Steel Plate.
3. It is not necessary to remove plate crown provided the plate is firmly secured to the sidewalk.
4. Transverse edges must be in contact with sidewalk surface after installation.

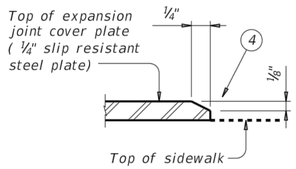


## EXP JOINT COVER PLATE BEVEL DETAIL

Bevel all plate edges as shown.

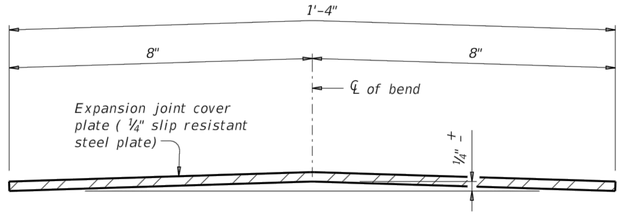


## BENDING DIAGRAM OF EXP JOINT COVER PLATE

| APPROVED SLIP RESISTANT PLATE | |
|---|---|
| Product | Manufacturer Website |
| Algrip™, Steel | www.algrip.com |
| Mebac® #3, Steel | www.harscoikg.com |
| SlipNOT®Grade 2, Steel | www.slipnot.com |

Provide cover plates fabricated with a product from this list. No exceptions are permitted.

### FABRICATION NOTES:

Shop drawings for the fabrication of Bridge Sidewalk Expansion Joint Cover Plate will not require the Engineer's approval if fabrication is in accordance with the details shown on this standard.

A Bridge Sidewalk Expansion Joint Cover Plate Layout which identifies location side of sleeve anchors and orientation of all cover plate sections must be developed by the fabricator. Mark each steel section in accordance with the Bridge Sidewalk Expansion Joint Cover Plate Layout. A copy of the Bridge Sidewalk Expansion Joint Cover Plate Layout is to be provided to the Engineer.

Sidewalk expansion joint cover plates must be hot-dipped galvanized ¼" slip resistant steel plate. Checker plate or diamond plate is not allowed nor are slip resistant tapes, films and non-metallic coatings.

Minimum required yield strength of steel plate is 36 ksi.

Hot-dip galvanize slip resistant steel plate after fabrication in accordance with Item 445, "Galvanizing".

Provide stainless steel flat head sleeve anchors meeting the requirements of ASTM F 593, Group I, Alloy 304. Countersink holes in slip-resistant plate for sleeve anchors. Drill holes in sidewalk as per sleeve anchor manufacturer's recommendations. Install sleeve anchors flush with, or slightly recessed below, top surface of sidewalk expansion joint cover plate.

### GENERAL NOTES:

Sidewalk expansion joint cover plates can only accommodate up to a 7" maximum expansion joint opening.

Details provided are applicable to concrete walkway surfaces only.

Payment for sidewalk expansion joint cover plates are by the pound of "Structural Steel (Misc Non-Bridge)" as per Item 442, "Metal for Structures".

Estimated weight of one sidewalk expansion joint cover plate is 14 plf.

Texas Department of Transportation

Bridge Division Standard

# BRIDGE SIDEWALK EXPANSION JOINT COVER PLATE (ALL SKEWS)

## BS-EJCP

| FILE: bsejste1-19.dgn | DN: TxDOT | CK: TxDOT | DW: TxDOT | CK: TxDOT |
|---|---|---|---|---|
| ©TxDOT April 2019 | CONT | SECT | JOB | HIGHWAY |
| REVISIONS | | | | |
| | DIST | COUNTY | | SHEET NO. |
| | | | | C5.14 |

DISCLAIMER:
The use of this standard is governed by the "Texas Engineering Practice Act". No warranty of any kind is made by TxDOT for any purpose whatsoever. TxDOT assumes no responsibility for the conversion of this standard to other formats or for incorrect results or damages resulting from its use.

DATE:
FILE:

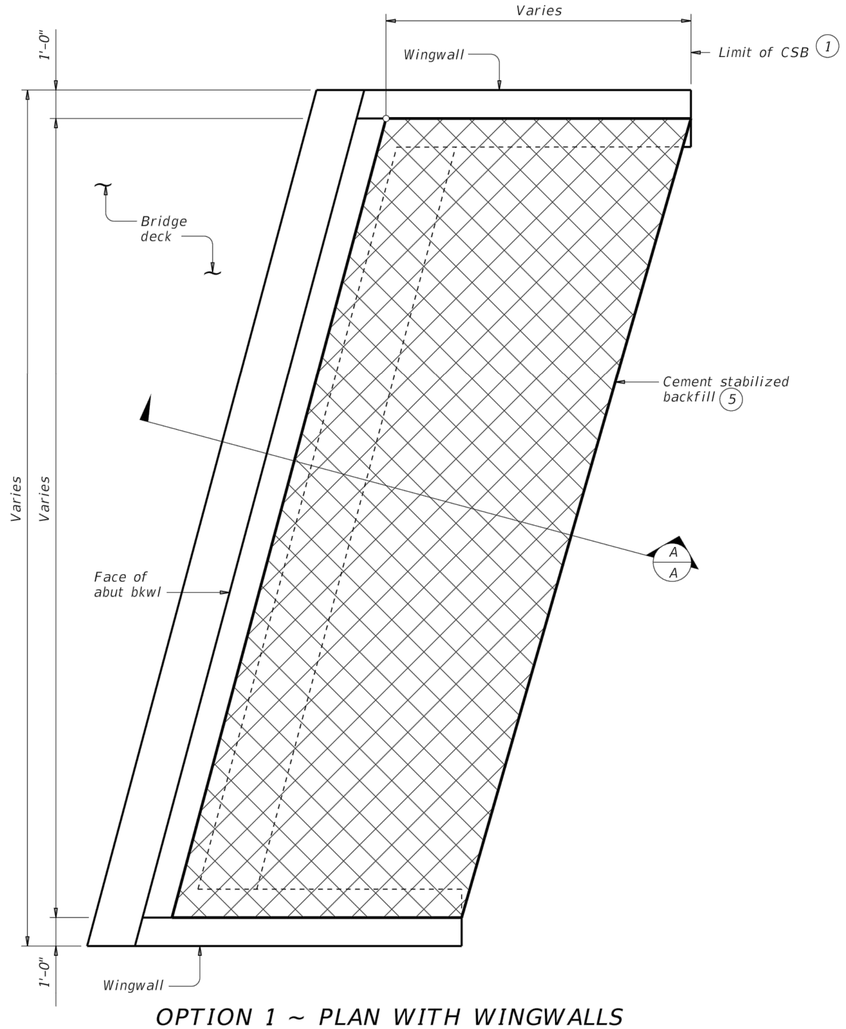


## OPTION 1 ~ PLAN WITH WINGWALLS

Cast-in-place retaining walls similar.

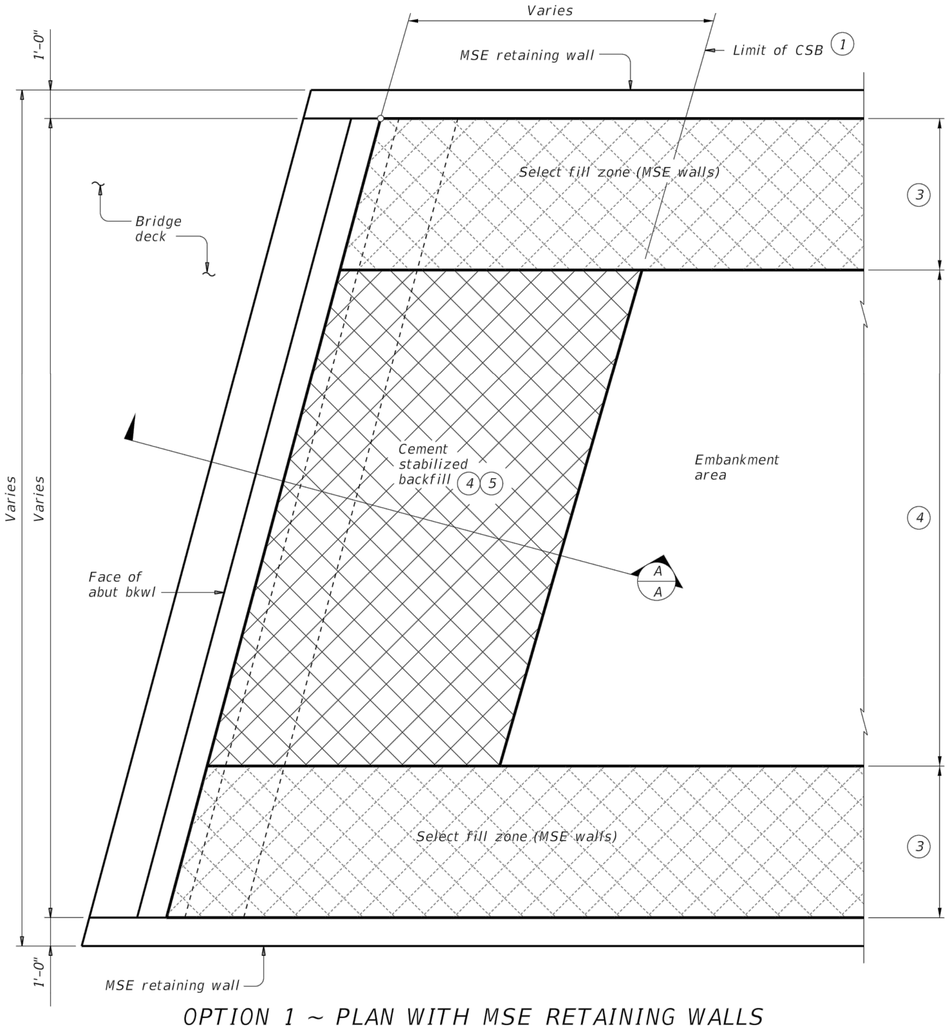


## OPTION 1 ~ PLAN WITH MSE RETAINING WALLS

(1) Usual limit of Cement Stabilized Backfill is at end of wingwall. Extend CSB limits as required to maintain a slope no steeper than 1:1 at bottom of backfill.

(2) Bench backfill as shown with 12" (approximate) bench depths.

(3) Where MSE retaining walls are present, adjust CSB limits to accommodate the select fill zone. See retaining wall details for additional information.

(4) When distance between select fill zones is less than 5'-0", MSE select fill may be substituted for cement stabilized backfill with approval from the Engineer.

(5) If shown in the plans flowable backfill can be used as a substitute for cement stabilized backfill with the following constraints:
a). If flowable backfill is to be placed over MSE backfill then a filter fabric will be placed over the MSE backfill prior to placement of the flowable fill; and
b). Place flowable fill in lifts not exceeding 2 feet in height, place each successive lift when the previous lift has stiffened/hardened (i.e. has lost its flowability).

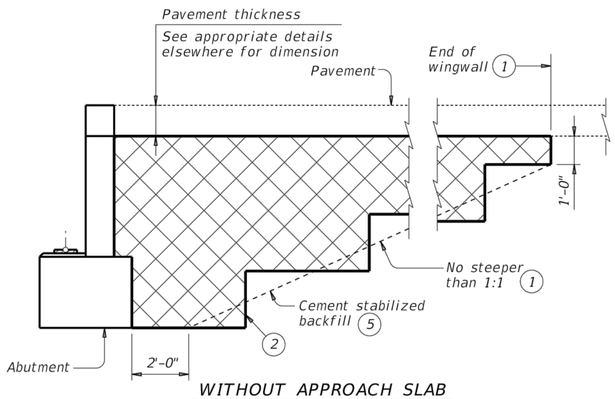


## WITHOUT APPROACH SLAB

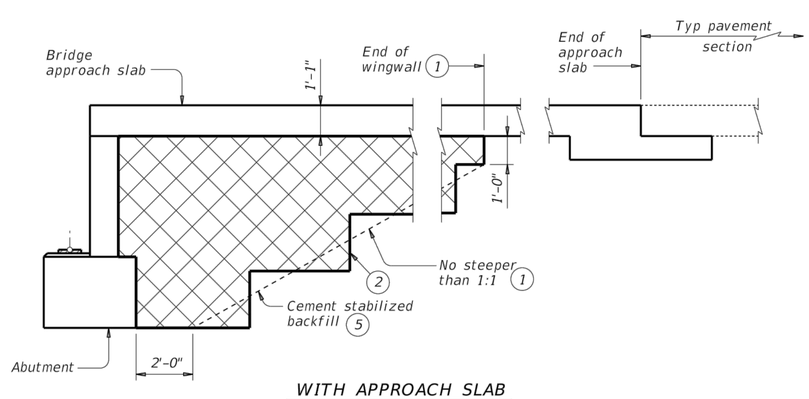


## WITH APPROACH SLAB

(Showing BAS-C, BAS-A similar.)

## SECTION A-A

### GENERAL NOTES:

See the Bridge Layout for selected Option. Option 2 is intended for new construction requiring high plasticity embankment fill with a plasticity index (PI) greater than 30 or pavement built in poor native soil. Poor soils are defined as high plasticity clays or expansive clays. Option 1 is intended for construction only requiring PI controlled embankment fill or excavation in competent soils/rocks in order to construct the abutment.

Provide Cement Stabilized Backfill (CSB) meeting the requirements of Item 400, "Excavation and Backfill for Structures", to the limits shown at bridge abutments.

If required elsewhere in the plans, provide Flowable Backfill meeting the requirements of Item 401, "Flowable Backfill", to the limits shown at bridge abutments.

Details are drawn showing left forward skew. See Bridge Layout for actual skew direction.

These details do not apply when Concrete Block retaining walls are used in lieu of wingwalls.



Texas Department of Transportation

Bridge Division Standard

# CEMENT STABILIZED ABUTMENT BACKFILL

## BRIDGE ABUTMENT

## CSAB

| FILE: csabste1-20.dgn | DN: TxDOT | CK: TxDOT | DW: TxDOT | CK: TxDOT |
|---|---|---|---|---|
| ©TxDOT April 2019 | CONT | SECT | JOB | HIGHWAY |
| REVISIONS | | | | |
| 02-20: Added Option 2. | DIST | COUNTY | | SHEET NO. |
| | | | | C5.15 |

DISCLAIMER:
The use of this standard is governed by the "Texas Engineering Practice Act". No warranty of any kind is made by TxDOT for any purpose whatsoever. TxDOT assumes no responsibility for the conversion of this standard to other formats or for incorrect results or damages resulting from its use.

DATE:
FILE:

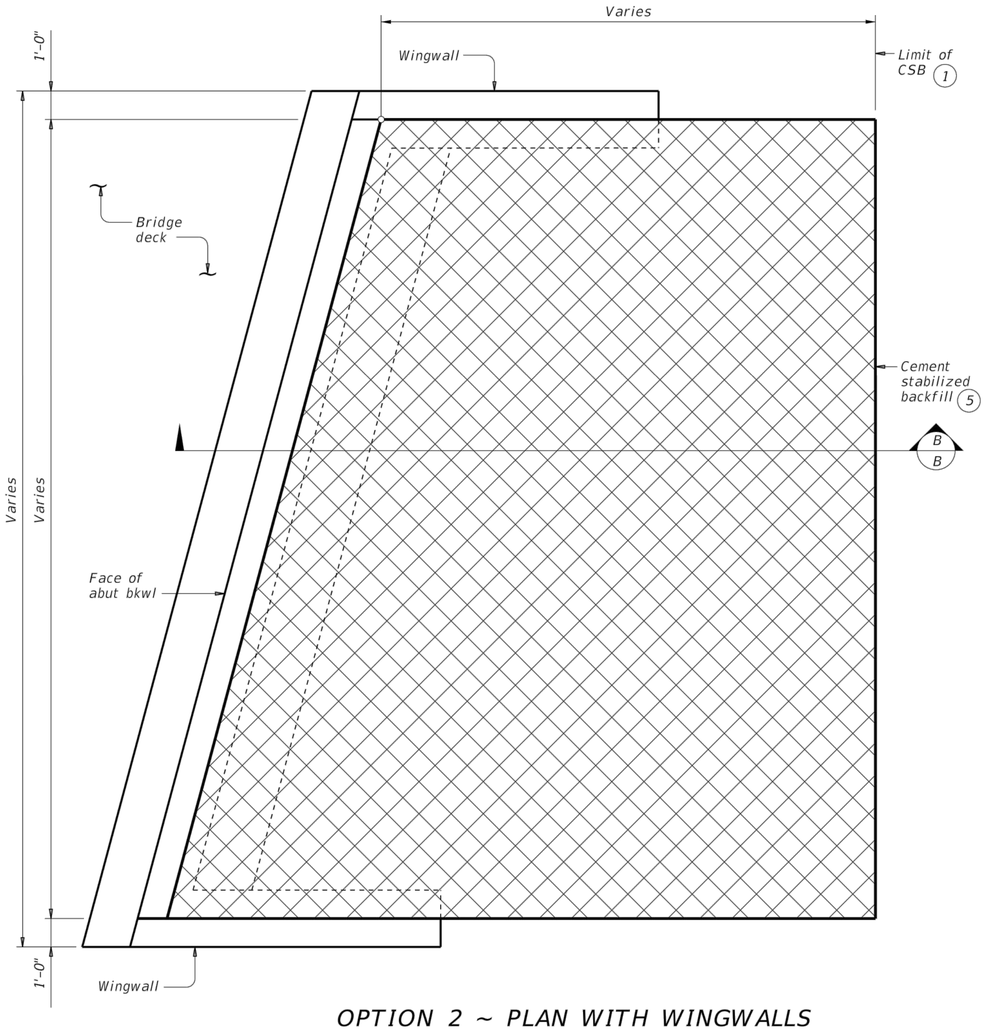


## OPTION 2 ~ PLAN WITH WINGWALLS

Cast-in-place retaining walls similar.

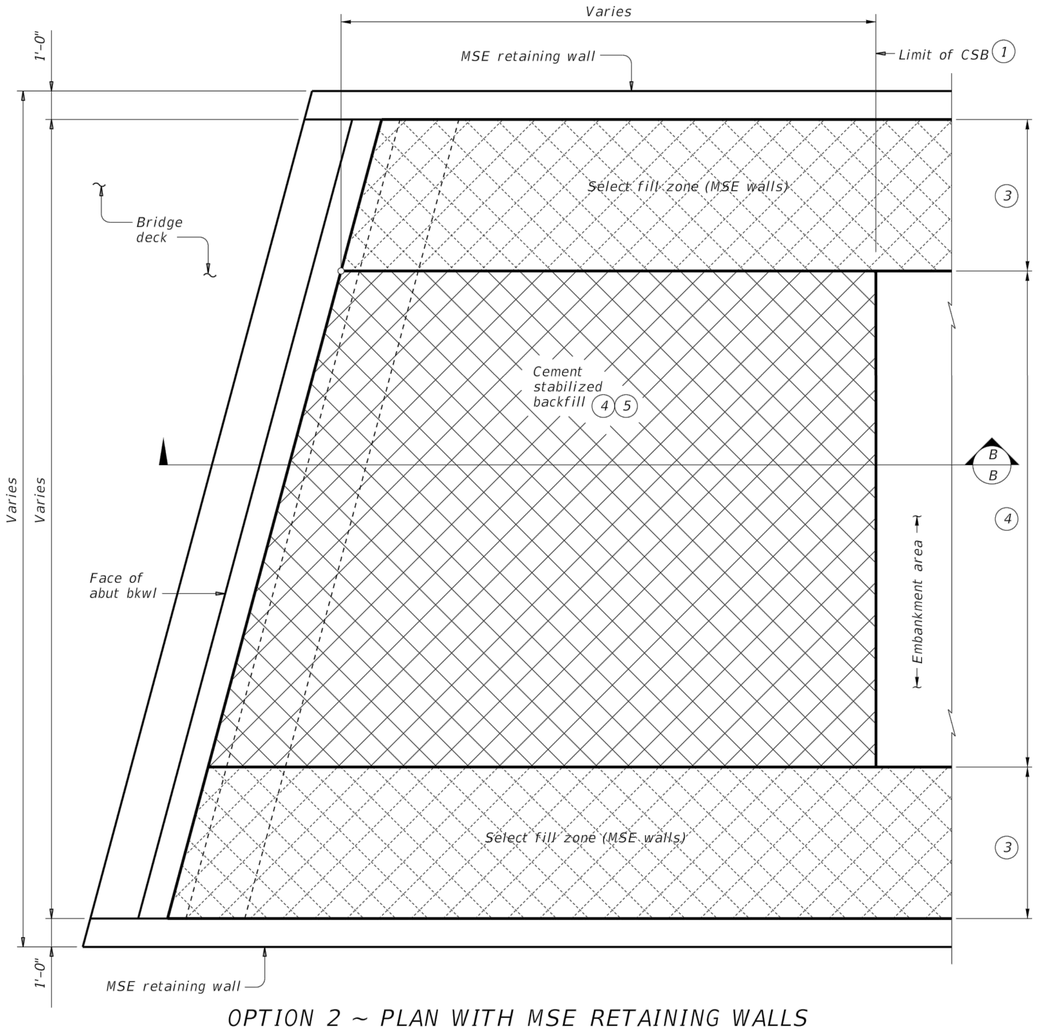


## OPTION 2 ~ PLAN WITH MSE RETAINING WALLS

(1) Usual limit of Cement Stabilized Backfill is at end of wingwall. Extend CSB limits as required to maintain a slope no steeper than 1:1 at bottom of backfill.

(2) Bench backfill as shown with 12" (approximate) bench depths.

(3) Where MSE retaining walls are present, adjust CSB limits to accommodate the select fill zone. See retaining wall details for additional information.

(4) When distance between select fill zones is less than 5'-0", MSE select fill may be substituted for cement stabilized backfill with approval from the Engineer.

(5) If shown in the plans flowable backfill can be used as a substitute for cement stabilized backfill with the following constraints:
a). If flowable backfill is to be placed over MSE backfill then a filter fabric will be placed over the MSE backfill prior to placement of the flowable fill; and
b). Place flowable fill in lifts not exceeding 2 feet in height, place each successive lift when the previous lift has stiffened/hardened (i.e. has lost its flowability).

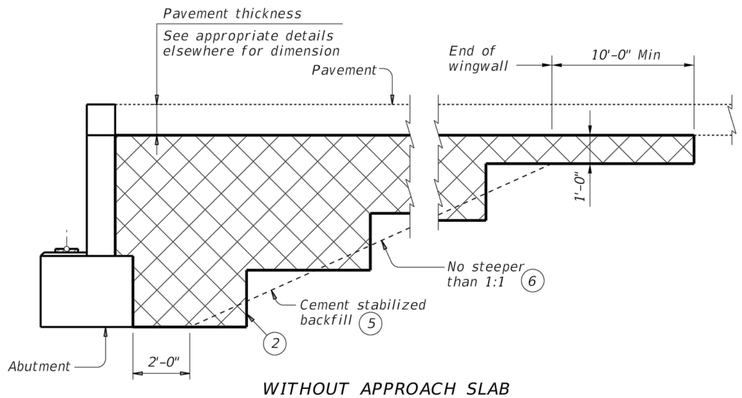


## WITHOUT APPROACH SLAB

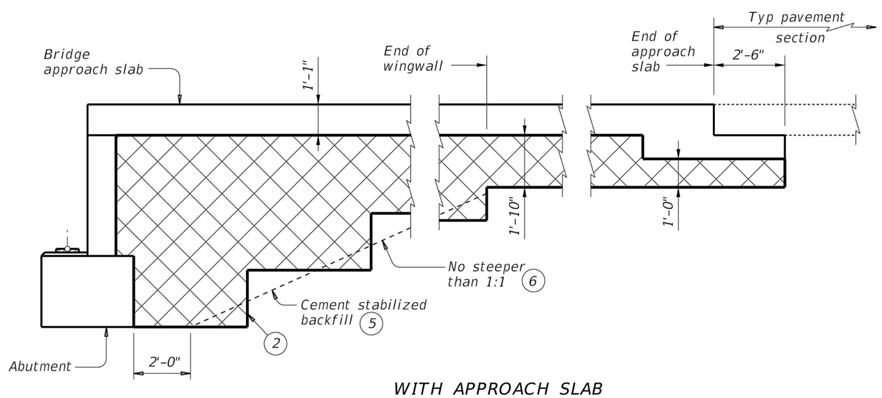


## WITH APPROACH SLAB

(Showing BAS-C, BAS-A similar.)

## SECTION B-B

SHEET 2 OF 2

Texas Department of Transportation

Bridge Division Standard

# CEMENT STABILIZED ABUTMENT BACKFILL

## BRIDGE ABUTMENT

## CSAB

| | | | | | |
|---|---|---|---|---|---|
| FILE: csabste1-20.dgn | DN: TxDOT | CK: TxDOT | DW: TxDOT | CK: TxDOT | |
| ©TxDOT April 2019 | CONT | SECT | JOB | HIGHWAY | |
| REVISIONS | | | | | |
| 02-20: Added Option 2. | DIST | COUNTY | | SHEET NO. | |
| | | | | C5.16 | |

DISCLAIMER:
The use of this standard is governed by the "Texas Engineering Practice Act". No warranty of any kind is made by TxDOT for any purpose whatsoever. TxDOT assumes no responsibility for the conversion of this standard to other formats or for incorrect results or damages resulting from its use.

DATE:
FILE:

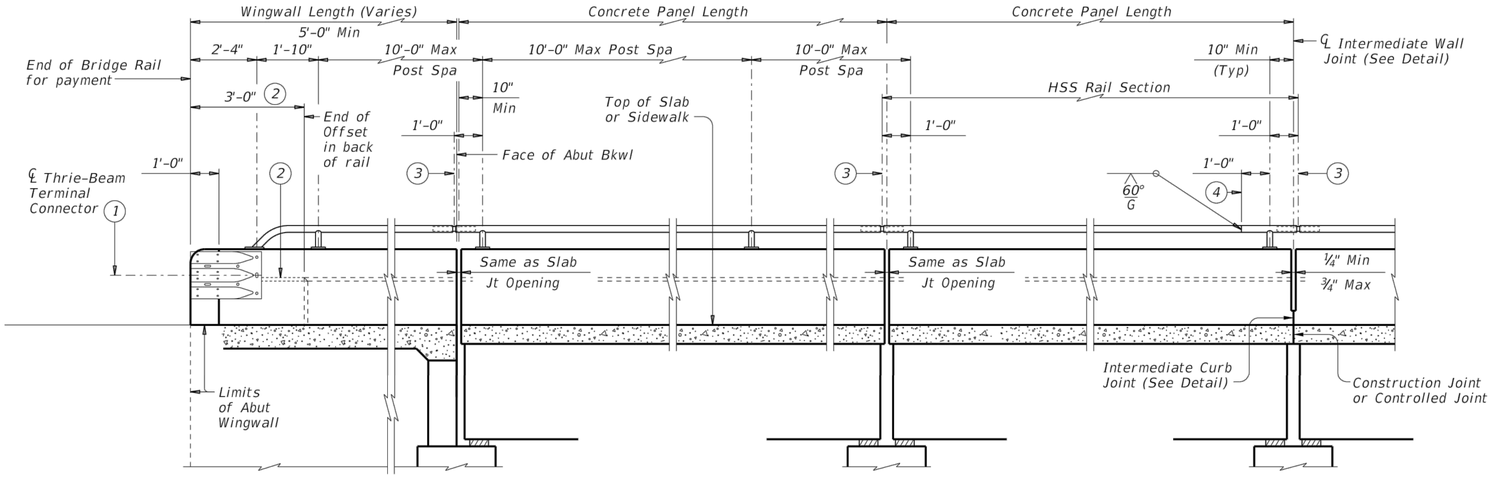


AT ABUTMENTS

AT BENTS WITH SLAB EXP JOINTS

AT BENTS WITHOUT SLAB EXP JOINTS

## ROADWAY ELEVATION OF RAIL

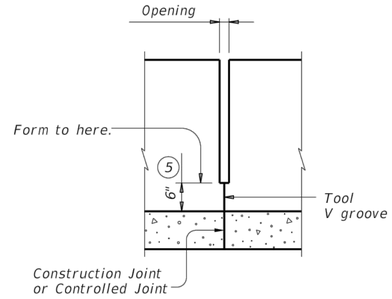


## INTERMEDIATE WALL JOINT DETAIL

Provide at all interior bents without slab expansion joints.

1. Terminal Connectors and associated hardware are to be paid for under the Item "Metal Beam Guard Fence". Attach Metal Beam Guard Fence Transitions to the bridge rail and extend along the embankment unless otherwise shown in the plans.
2. Back of rail offset may, with Engineer's approval, be continued to the end of the railing.
3. ℄ Exp Joint or Splice Joint as required.
4. One shop splice per HSS rail section is permitted with minimum 85 percent penetration. The weld may be square groove, or single vee groove. Grind smooth.
5. Increase 2" for structures with overlay.
6. Place 4 additional Bars R(#4) 3'-8" in length inside Bars S(#4) and centered 2'-0" from end of rail when Terminal Connections are required. Field bend as needed.
7. HSS 2.875 x 0.203
8. HSS 2.375 x 0.154
9. ⅜" Dia Hole in bottom of HSS rail (Minimum 1 hole between posts ~ Typ)

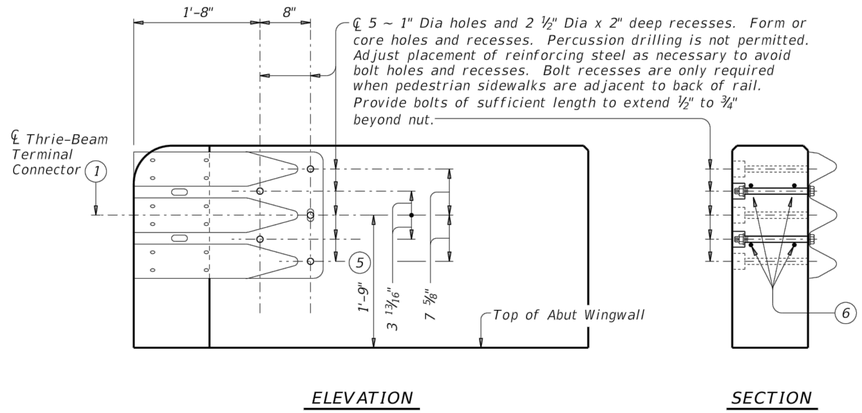


ELEVATION

SECTION

## TERMINAL CONNECTION DETAILS

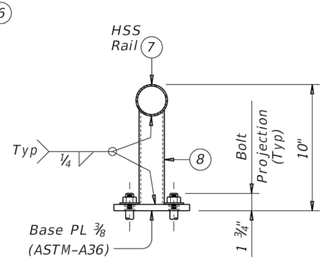


TRANSVERSE SECTION

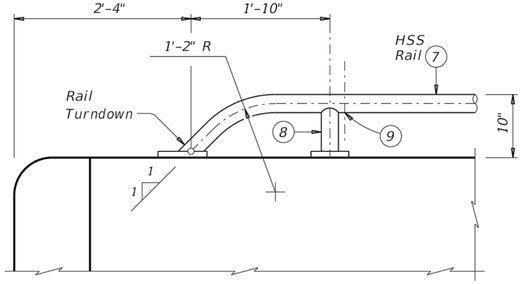


Note that at least two anchor points (as shown) are required for the Bridge Rail on the Abutment Wingwall. Longer Wingwalls may require more than two Rail anchorages.

## HSS RAIL TERMINAL DETAIL

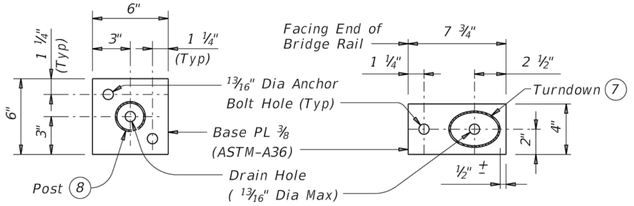


POST BASE PLATE PLAN

RAIL TURNDOWN BASE PLATE PLAN

## HSS RAIL DETAILS

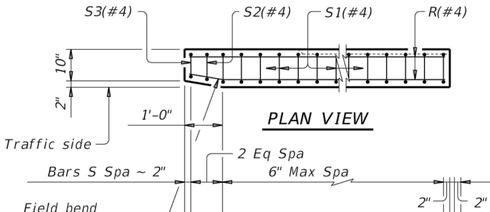


PLAN VIEW

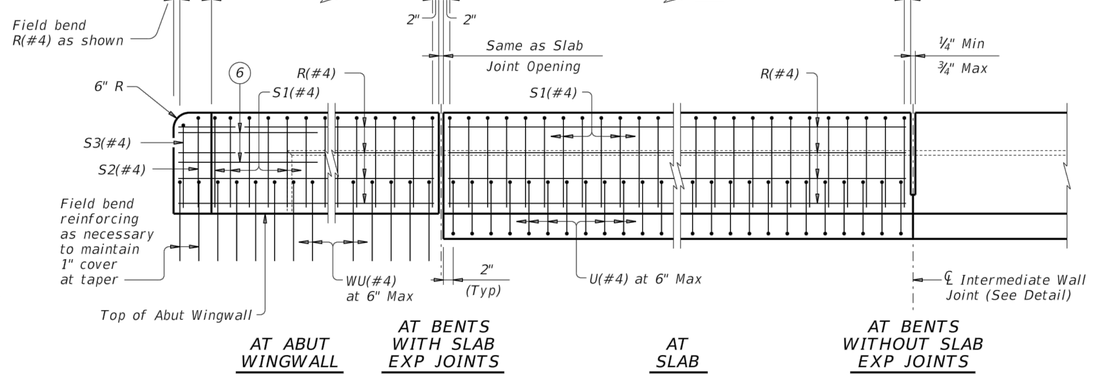


AT ABUT WINGWALL

AT BENTS WITH SLAB EXP JOINTS

AT SLAB

AT BENTS WITHOUT SLAB EXP JOINTS

## ELEVATION SHOWING TYPICAL REINFORCING PLACEMENT

(Showing without raised sidewalk)

SHEET 1 OF 3

Texas Department of Transportation

Bridge Division Standard

# COMBINATION RAIL

# TYPE C221

| FILE: rlstd018-19.dgn | DN: TxDOT | CK: TxDOT | DW: JTR | CK: JMH |
|---|---|---|---|---|
| ©TxDOT September 2019 | CONT | SECT | JOB | HIGHWAY |
| REVISIONS | | | | |
| | DIST | COUNTY | | SHEET NO. |
| | | | | C5.17 |

DISCLAIMER:
The use of this standard is governed by the "Texas Engineering Practice Act". No warranty of any kind is made by TxDOT for any purpose whatsoever. TxDOT assumes no responsibility for the conversion of this standard to other formats or for incorrect results or damages resulting from its use.

DATE:
FILE:

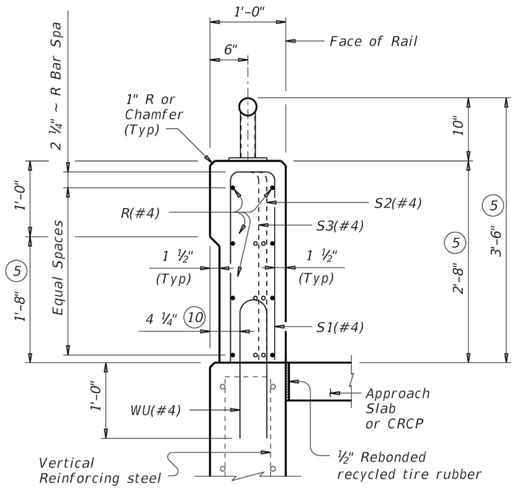


ON ABUTMENT WINGWALLS OR CIP RETAINING WALLS

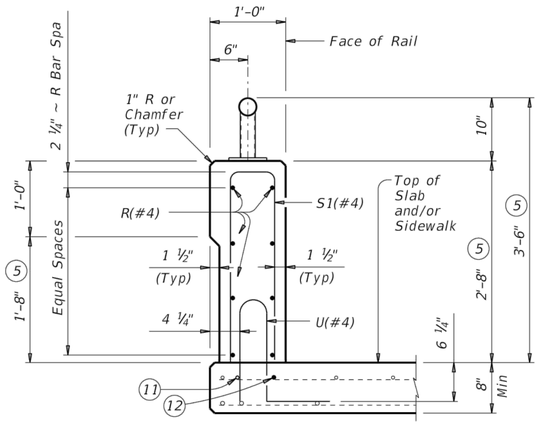


ON BRIDGE SLAB

## SECTIONS THRU RAIL WITHOUT RAISED SIDEWALK

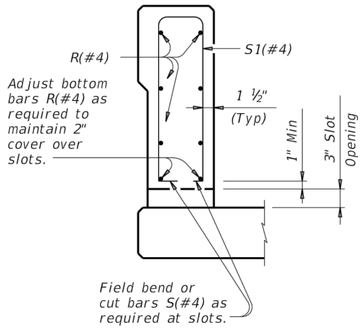


## SECTION THRU OPTIONAL SIDE SLOT DRAIN

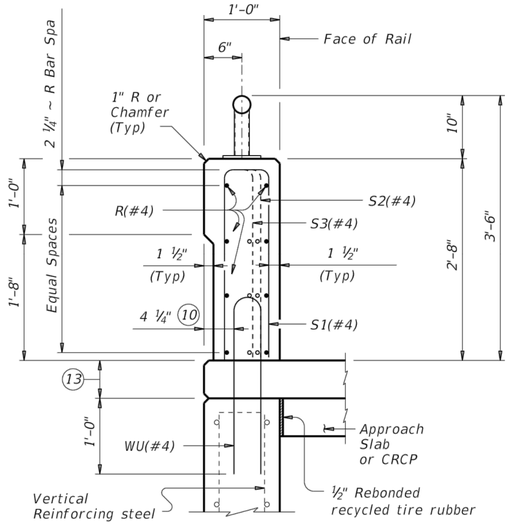


ON ABUTMENT WINGWALLS OR CIP RETAINING WALLS

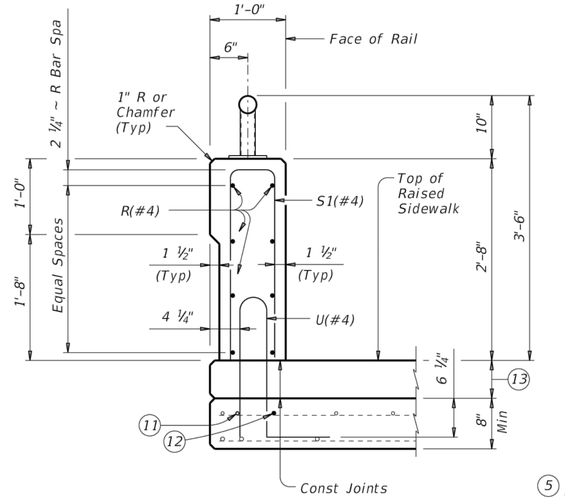


ON BRIDGE SLAB

## SECTIONS THRU RAIL WITH RAISED SIDEWALK

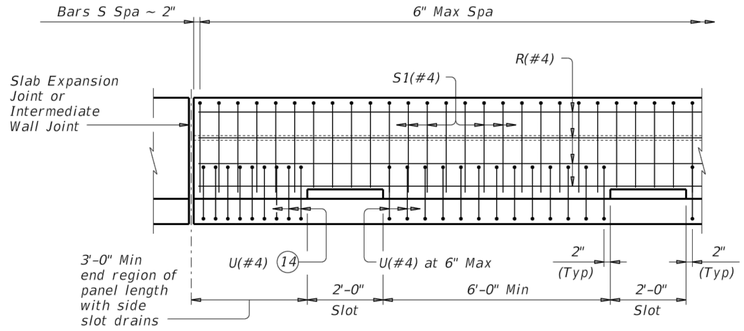


## OPTIONAL SIDE SLOT DRAIN DETAIL

*Note: Side Slot Drains may be used where shown elsewhere on the plans or as directed by the Engineer. Drains should not be placed over railroad tracks, lower roadways, or sidewalks. When this rail is used as a separator between a roadway surface and a sidewalk surface, side drain slots will not be permitted.*

(5) Increase 2" for structures with overlay.

(10) 5 ¼" when vertical reinforcing has closer clear cover over horizontal reinforcing in abutment wingwalls or retaining walls on traffic side of wall.

(11) As an aid in supporting reinforcement, additional longitudinal bars may be used in the slab with the approval of the Engineer. Such bars must be furnished at the Contractors expense.

(12) Top longitudinal slab bar may be adjusted laterally 3" plus or minus to tie reinforcing.

(13) Raised Sidewalk

(14) Space U(#4) bars at 4" Max when end region of panel length is less than 6'-0" to side slot drain. Space U(#4) bars at 6" Max when end region of panel length is 6'-0" and greater to side slot drain.



Texas Department of Transportation

Bridge Division Standard

# COMBINATION RAIL

## TYPE C221

| FILE: rlstd018-19.dgn | DN: TxDOT | CK: TxDOT | DW: JTR | CK: JMH |
|---|---|---|---|---|
| ©TxDOT September 2019 | CONT | SECT | JOB | HIGHWAY |
| REVISIONS | | | | |
| | DIST | COUNTY | | SHEET NO. |
| | | | | C5.18 |

DISCLAIMER:
The use of this standard is governed by the "Texas Engineering Practice Act". No warranty of any kind is made by TxDOT for any purpose whatsoever. TxDOT assumes no responsibility for the conversion of this standard to other formats or for incorrect results or damages resulting from its use.

DATE:
FILE:

## RAIL DATA FOR HORIZONTAL CURVES

| | RADIUS TO FACE OF RAIL | MAX CHORD LENGTH | CONSTRUCT OR FABRICATE |
|---|---|---|---|
| HSS Rail | Over 2800' | 29'–0" | Straight rail panels |
| | Over 1400' thru 2800' | 14'–6" | To required radius or to chords shown |
| | Over 700' thru 1400' | 7'–3" | |
| | Thru 700' | Zero | To required radius |

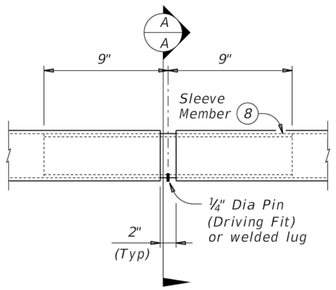


AT SPLICE OR EXP JTS

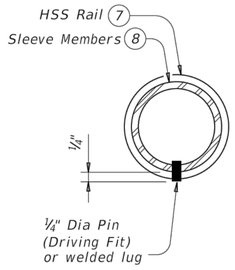


SECTION A-A

## PIPE SPLICE DETAILS

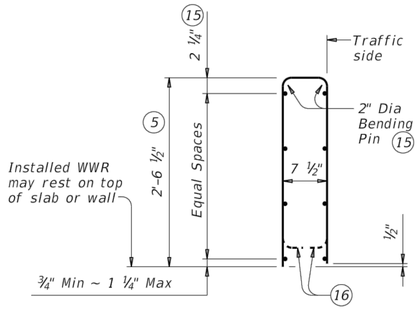


OPTIONAL WELDED WIRE REINFORCEMENT (WWR)

| DESCRIPTION | LONGITUDINAL WIRES | VERTICAL WIRES |
|---|---|---|
| Minimum (Cumulative Total) Wire Area | 1.067 Sq In. | 0.267 Sq In. per Ft |
| | No. of Wires | Spacing |
| Minimum | 8 | 4" |
| Maximum | 10 | 8" |
| Maximum Wire Size Differential | The smaller wire must have an area of 40% or more of the larger wire. | |

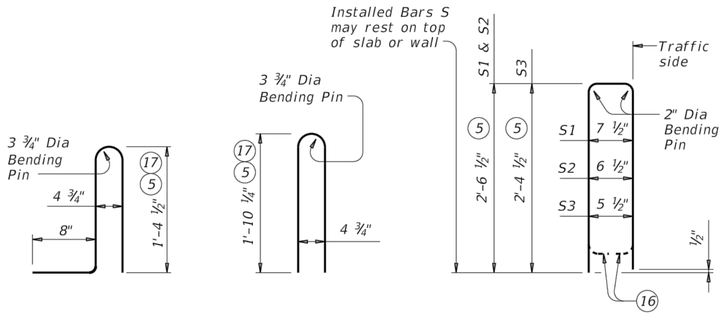


BARS U (#4) BARS WU (#4) BARS S (#4)

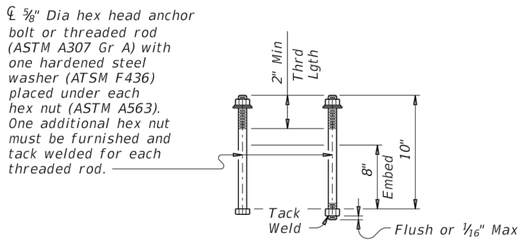


CAST-IN-PLACE ANCHOR BOLT OPTIONS (18)

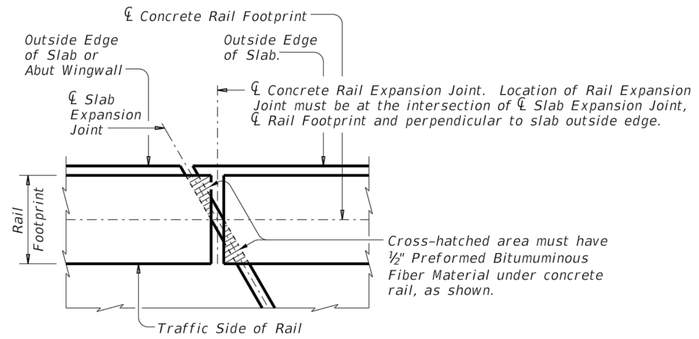


PLAN OF RAIL AT EXPANSION JOINTS

Example showing Slab Expansion Joints without breakbacks.

(5) Increase 2" for structures with overlay.

(7) HSS 2.875 x 0.203

(8) HSS 2.375 x 0.154

(15) No longitudinal wires may be in top center of cage.

(16) Bend or cut as required to clear drain slots.

(17) For raised sidewalks, add sidewalk height to total bar height. Use sidewalk height at rail's location.

(18) See "Material Notes" for anchor bolt information.

### CONSTRUCTION NOTES:

This railing may be constructed by the slipform process when approved by the Engineer, with equipment approved by the Engineer and when adhesive anchor bolts are used. Slipforming parapet is not allowed if anchor bolts are cast with parapet wall. Provide sensor control for both line and grade. Tack welding to provide bracing for slipform operations is acceptable. Welding may be performed at a minimum spacing of 3 ft between the cage and the anchorage. It is permissible to weld to bars U, WU and S at any location on the cage. If increased bracing is needed, provide additional anchorage devices and weld in the upper two thirds of the cage. Paint welded areas on epoxy coated and/or galvanized reinforcing with an organic zinc rich paint in accordance with Item 445 "Galvanizing".

If rail is slipformed, apply an heavy epoxy bead 1" behind toe of traffic side of rail to concrete deck just prior to slip forming. Provide a ⅜" width x ¼" tall heavy epoxy bead with Type III, Class C or a Type V epoxy.

Test adhesive anchors in accordance with Item 450.3.3, "Tests". Test 3 anchors per 100 anchors installed. Perform corrective measures to provide adequate capacity if any of the tests do not meet the required test load. Repair damage from testing as directed.

At the Contractor's option anchor bolts may be cast with the parapet. See "Material Notes".

Face of rail, parapet must be plumb unless otherwise approved by the Engineer. HSS rail posts must be square to the top of parapet. Use epoxy mortar under post base plates if gaps larger than 1/16" exist.

Round or chamfer exposed edges of HSS rail and HSS rail posts to approximately 1/16" by grinding.

HSS rail sections must not include less than two posts, and no more than four (except at Abutments).

Chamfer all parapet exposed corners.

### MATERIAL NOTES:

Provide Class "C" concrete. Povide Class "C" (HPC) if required elsewhere.

Provide Grade 60 reinforcing steel.

Epoxy coat or galvanize all reinforcing steel if slab bars are epoxy coated or galvanized.

Provide ASTM A1085 or A500 Gr B or A53 Gr B for all HSS.

Galvanize all metal components of steel rail system. Apply additional coatings when shown elsewhere on the plans. When plans require paint over gavanizing, follow the requirements for painting galvanized steel in Item 445, "Galvanizing" and when field painting, Item 446, "Field Cleaning and Painting Steel". Sleeve members and anchor bolts must receive galvanization prior to installation and only field paint after installation unless directed otherwise by Engineer.

Deformed Welded Wire Reinforcement (WWR) (ASTM A1064) of equal size and spacing may be substituted for Bars U and WU unless noted otherwise. Deformed WWR (ASTM 1064) may be substituted for Bars R and S, as shown. Combinations of reinforcing steel and WWR or configurations of WWR other that shown are permitted if conditions in the table are satisfied. Provide the same laps as required for reinforcing bars.

Anchor bolts must be ⅝" Dia ASTM A307 Gr A fully threaded rods with one hex nut and one hardened steel washer (ASTM F436) each. Nuts must conform to ASTM A563 requirements. Embed fully threaded rods into parapet wall with a Type III, Class C, D, E, or F anchor adhesive. Minimum adhesive anchor embedment depth is 3". Anchor adhesive chosen must be able to achieve a nominal bond strength in tension of a single anchor, Na, of 5 kips (edge distance must be accounted for). Submit signed and sealed calculations or the manufacturer's published literature showing the proposed anchor adhesive's ability to develop this load to the Engineer for approval prior to use. Anchor installation, including hole size, drilling, and clean out, must be in accordance with Item 450, "Railing".

Optional cast-in-place anchor bolts must be ⅝" Dia ASTM A307 Gr A bolts (or threaded rods with one tack welded hex nut each) with one hex nut and one hardened steel washer (ASTM F436) at each bolt. Nuts must conform to ASTM A563 requirements.

Provide bar laps, where required, as follows: Uncoated or galvanized ~ #4 = 1'–7"
Epoxy coated ~ #4 = 2'–5"

### GENERAL NOTES:

This rail has been evaluated and accepted to be of equal strength to railings with like geometry, which have been crash tested to meet MASH TL-3 criteria. This rail can be used for speeds of 50 mph and greater when a TL-3 rated guard fence transition is used. When a TL-2 rated guard fence transition is used, this rail can only be used for speeds of 45 mph and less.

Do not use this railing on bridges with expansion joints providing more than 5" movement.

Rail anchorage details shown on this standard may require modification for select structure types. See appropriate details elsewhere in plans for these modifications.

Submit erection drawings showing panel lengths, rail post spacing, and anchor bolt setting to the Engineer for approval.

Average weight of railing with no overlay: 380 plf (total)
370 plf (Conc)
10 plf (Steel)

Cover dimensions are clear dimensions, unless noted otherwise.
Reinforcing bar dimensions shown are out-to-out of bar.



Texas Department of Transportation

Bridge Division Standard

# COMBINATION RAIL

## TYPE C221

| FILE: rlstd018-19.dgn | DN: TxDOT | CK: TxDOT | DW: JTR | CK: JMH |
|---|---|---|---|---|
| ©TxDOT September 2019 | CONT | SECT | JOB | HIGHWAY |
| REVISIONS | | | | |
| | DIST | COUNTY | | SHEET NO. |
| | | | | C5.19 |

DISCLAIMER:
The use of this standard is governed by the "Texas Engineering Practice Act". No warranty of any kind is made by TxDOT for any purpose whatsoever. TxDOT assumes no responsibility for the conversion of this standard to other formats or for incorrect results or damages resulting from its use.

DATE:
FILE:

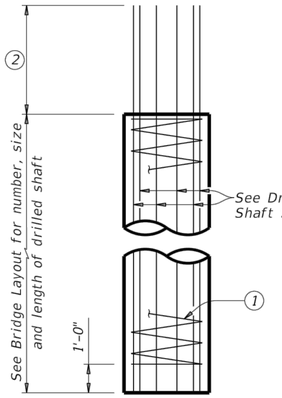


ABUTMENTS, WINGWALLS AND MULTI-DRILLED SHAFT FOOTINGS

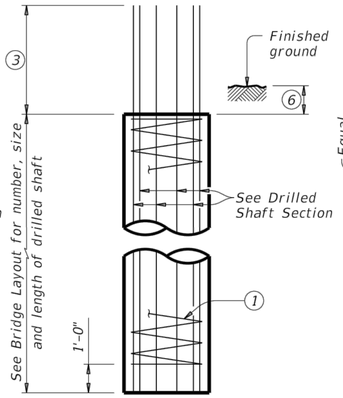


INTERIOR BENTS DRILLED SHAFT DIA EQUAL TO COLUMN DIA

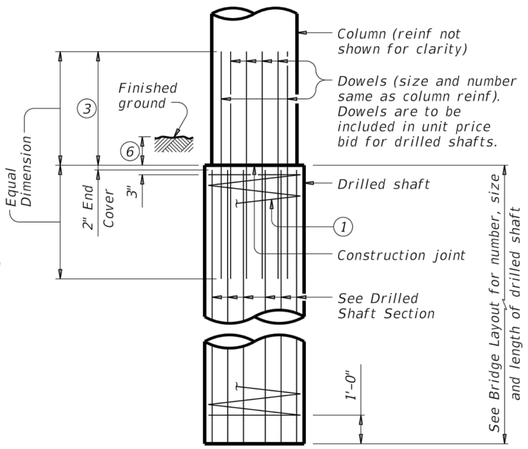


INTERIOR BENTS DRILLED SHAFT DIA GREATER THAN COLUMN DIA

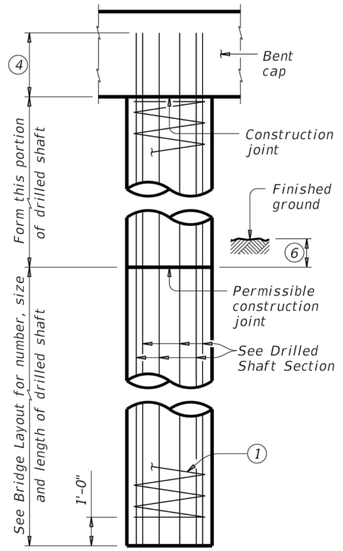


OPTIONAL INTERIOR BENT DRILLED SHAFT DETAIL (5)

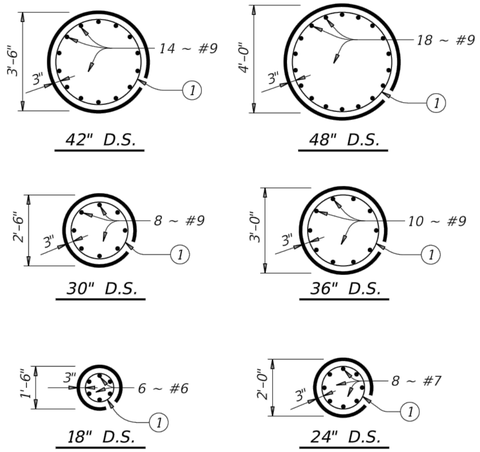


DRILLED SHAFT SECTIONS

## DRILLED SHAFT DETAILS

| TABLE OF PILE EMBEDMENT | |
|---|---|
| Pile Type | Embedment Depth (Ft) |
| 16" Sq Concrete<br>18" Sq Concrete<br>HP14 Steel<br>HP16 Steel | 1'-0" |
| 20" Sq Concrete<br>24" Sq Concrete<br>HP18 Steel | 1'-6" |

See Prestressed Concrete Piling (CP) standard for additional details on concrete pile embedment.

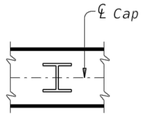


ORIENTATION OF STEEL H-PILING

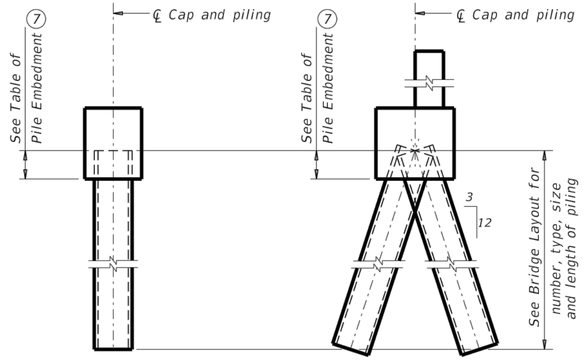


PILING DETAILS
(Concrete or steel H)

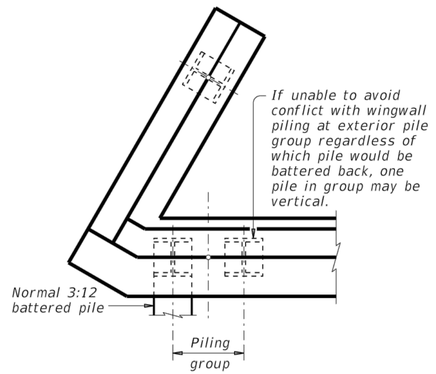


DETAIL "A"
(Showing plan view of a 30° skewed abutment)

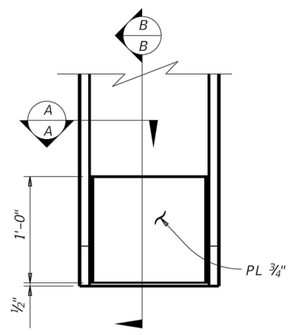


ELEVATION

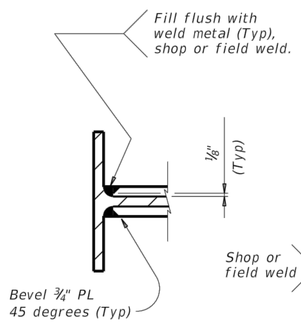


SECTION A-A

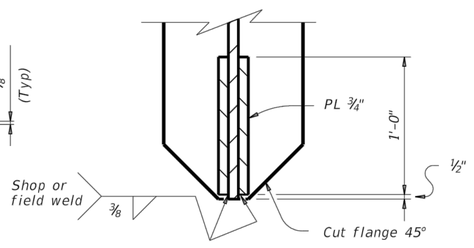


SECTION B-B

STEEL H-PILE TIP REINFORCEMENT

See Item 407 "Steel Piling" to determine when tip reinforcement is required and for options to the details shown.

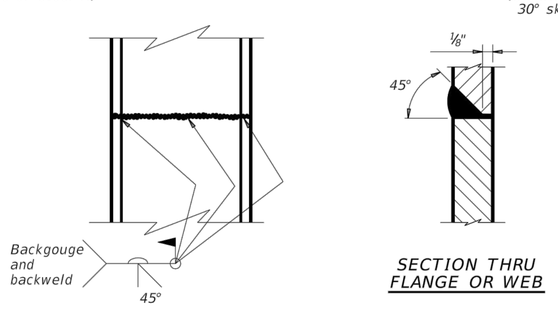





SECTION THRU FLANGE OR WEB

STEEL H-PILE SPLICE DETAIL

Use when required.

(1) #3 spiral at 6" pitch (one and a half flat turns top and bottom).

(2) Min extension into supported element:
#6 Bars = 1'-11"
#7 Bars = 2'-0"
#9 Bars = 2'-3"

(3) Min lap with column reinf:
#7 Bars = 2'-11"
#9 Bars = 3'-9"

(4) Min extension into supported element:
#6 Bars = 1'-11"
#7 Bars = 2'-3"
#9 Bars = 2'-9"

(5) Drilled shafts may extend to the bottom of bent caps for "H" heights of 6 ft and less (as shown on the Bridge Layout), if approved. This option can only be used when the drilled shaft diameter equals the column diameter. Obtain approval of the forming method above the ground line prior to construction. No adjustments in payment will be made if this option is used.

(6) 1'-0" Min, unless shown otherwise on plans.

(7) Or as shown on plans.



Texas Department of Transportation

Bridge Division Standard

# COMMON FOUNDATION DETAILS

FD

| FILE: fdstde01-19.dgn | DN: TxDOT | CK: TxDOT | DW: TxDOT | CK: TxDOT |
|---|---|---|---|---|
| ©TxDOT April 2019 REVISIONS | CONT | SECT | JOB | HIGHWAY |
| | DIST | COUNTY | | SHEET NO. |
| | | | | C5.20 |

DISCLAIMER:
The use of this standard is governed by the "Texas Engineering Practice Act". No warranty of any kind is made by TxDOT for any purpose whatsoever. TxDOT assumes no responsibility for the conversion of this standard to other formats or for incorrect results or damages resulting from its use.

DATE:
FILE:

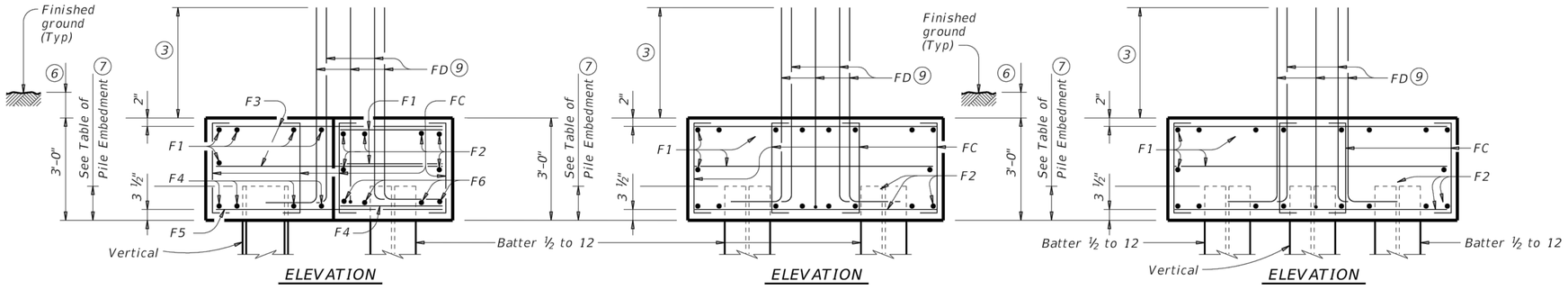


ELEVATION




ELEVATION




ELEVATION

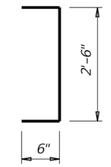


BARS FC

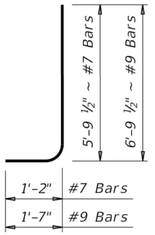


BARS FD (9)

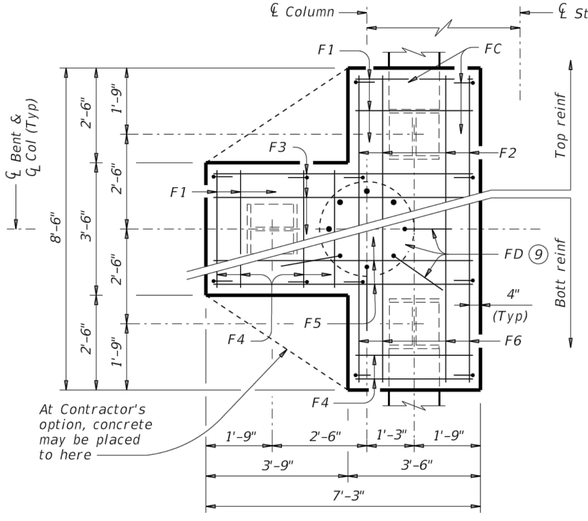


PLAN

## THREE PILE FOOTING (8)

For 36" Dia and smaller columns.

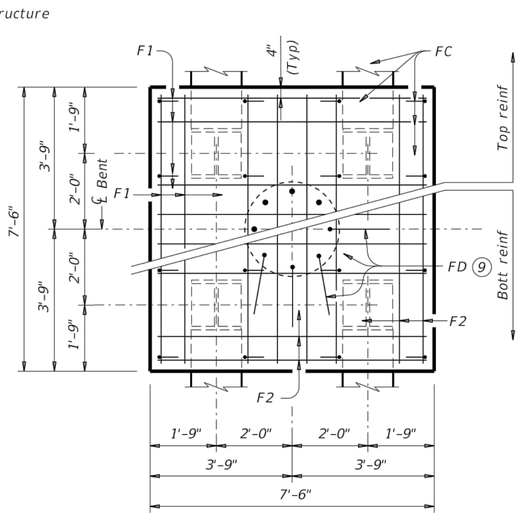


PLAN

## FOUR PILE FOOTING (8)

For 42" Dia and smaller columns.

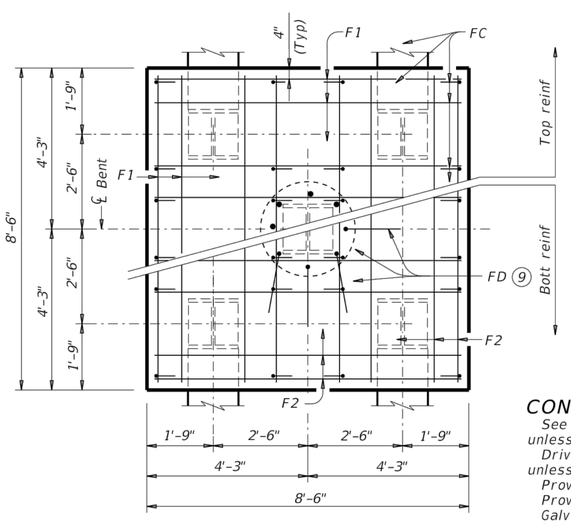


PLAN

## FIVE PILE FOOTING (8)

For 42" Dia and smaller columns.

(3) Min lap with column reinf:
#7 Bars = 2'-11"
#9 Bars = 3'-9"

(6) 1'-0" Min, unless shown otherwise on plans.

(7) Or as shown on plans.

(8) See Bridge Layout for type, size and length of piling.

(9) Number and size of FD bars must match column reinforcing. Tie FD bars to the top of the bottom reinforcing mat.

(10) For 24" columns, use #7 FD bars (7'-1") in place of #9 bars and deduct 116 lbs.
For 36" columns, add 2 FD bars (55 lbs).

(11) For 24" columns, use #7 FD bars (7'-1") in place of #9 bars and deduct 116 lbs.
For 36" columns, add 2 FD bars (55 lbs).
For 42" columns, add 6 FD bars (172 lbs)
(42" columns disallowed on 3 Pile Footings)

## TABLE OF FOOTING QUANTITIES FOR 30" COLUMNS

| ONE 3 PILE FOOTING | | | | |
|---|---|---|---|---|
| Bar | No. | Size | Length | Weight |
| F1 | 11 | #4 | 3'- 2" | 23 |
| F2 | 6 | #4 | 8'- 2" | 33 |
| F3 | 6 | #4 | 6'- 11" | 28 |
| F4 | 8 | #9 | 3'- 2" | 86 |
| F5 | 4 | #9 | 6'- 11" | 94 |
| F6 | 4 | #9 | 8'- 2" | 111 |
| FC | 12 | #4 | 3'- 6" | 28 |
| FD (10) | 8 | #9 | 8'- 8" | 231 |
| Reinforcing Steel | | | Lb | 606 |
| Class "C" Concrete | | | CY | 4.8 |

| ONE 4 PILE FOOTING | | | | |
|---|---|---|---|---|
| Bar | No. | Size | Length | Weight |
| F1 | 20 | #4 | 7'- 2" | 96 |
| F2 | 16 | #8 | 7'- 2" | 306 |
| FC | 16 | #4 | 3'- 6" | 37 |
| FD (11) | 8 | #9 | 8'- 8" | 231 |
| Reinforcing Steel | | | Lb | 670 |
| Class "C" Concrete | | | CY | 6.3 |

| ONE 5 PILE FOOTING | | | | |
|---|---|---|---|---|
| Bar | No. | Size | Length | Weight |
| F1 | 20 | #4 | 8'- 2" | 109 |
| F2 | 16 | #9 | 8'- 2" | 444 |
| FC | 24 | #4 | 3'- 6" | 56 |
| FD (11) | 8 | #9 | 8'- 6" | 231 |
| Reinforcing Steel | | | Lb | 840 |
| Class "C" Concrete | | | CY | 8.0 |

## CONSTRUCTION NOTES:

See Bridge Layout for foundation type required. Use these foundation details unless shown otherwise.
Drive piling under abutment wingwalls to a minimum resistance of 10 Tons/Pile unless shown otherwise.
Provide Class C Concrete (f'c = 3,600 psi), unless shown otherwise.
Provide Grade 60 reinforcing steel.
Galvanize reinforcing if shown elsewhere in the plans.
Provide bar laps for drilled shaft reinforcing, where required, as follows:
Uncoated or galvanized (#6) ~ 2'-6"
Uncoated or galvanized (#7) ~ 2'-11"
Uncoated or galvanized (#9) ~ 3'-9"

## GENERAL NOTES:

Designed according to AASHTO LRFD Bridge Design Specifications.

Cover dimensions are clear dimensions, unless noted otherwise.
Reinforcing bar dimensions shown are out-to-out of bar.

## DESIGNER NOTES:

Do not use the drilled shaft details shown on this standard for retaining wall, noise wall, barrier, or sign foundations without structural evaluation.
Do not use the footings shown on this standard in direct contact with salt water or exposed to salt water spray.
Maximum allowable pile loads for the footings shown are :
72 Tons/Pile with 24" Dia Columns
80 Tons/Pile with 30" Dia Columns
100 Tons/Pile with 36" Dia Columns
120 Tons/Pile with 42" Dia Columns



Texas Department of Transportation

Bridge Division Standard

# COMMON FOUNDATION DETAILS

FD

| FILE: fdstde01-19.dgn | DN: TxDOT | CK: TxDOT | DW: TxDOT | CK: TxDOT |
|---|---|---|---|---|
| ©TxDOT April 2019 | CONT | SECT | JOB | HIGHWAY |
| REVISIONS | | | | |
| | DIST | COUNTY | | SHEET NO. |
| | | | | C5.21 |

DISCLAIMER:
The use of this standard is governed by the "Texas Engineering Practice Act". No warranty of any kind is made by TxDOT for any purpose whatsoever. TxDOT assumes no responsibility for the conversion of this standard to other formats or for incorrect results or damages resulting from its use.

DATE:
FILE:

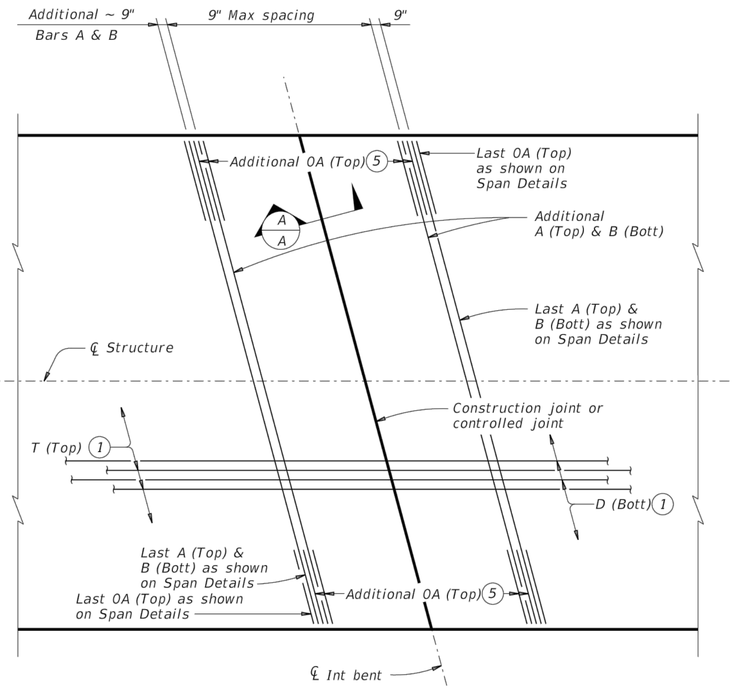


## PLAN FOR 0° OR 15° SKEW

(Showing 15° skew)

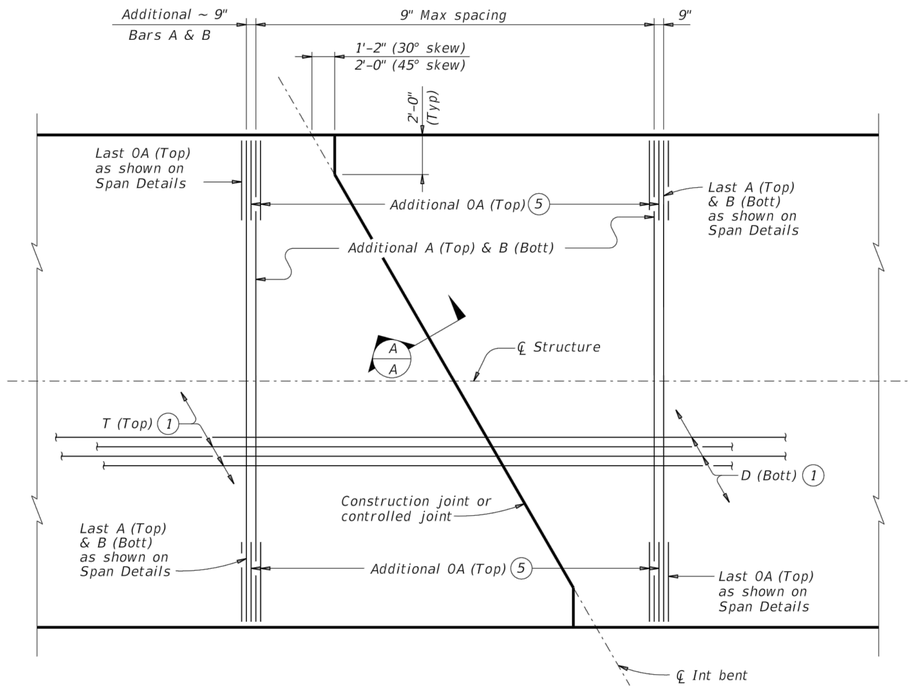


## PLAN FOR 30° OR 45° SKEW

(Showing 30° skew)

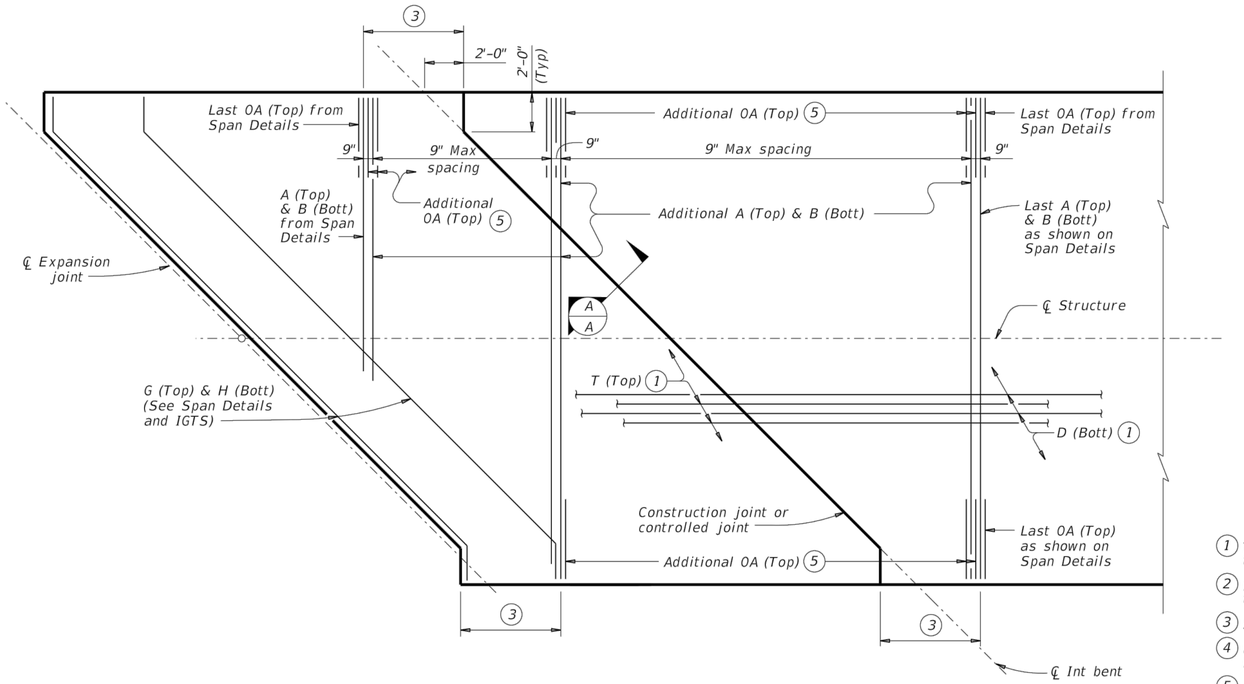


## PLAN FOR 45° SKEW 4

(Showing short span condition.)

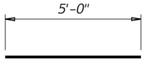


BARS OA (#5)

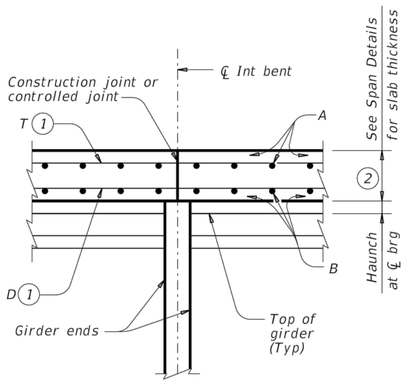


## SECTION A-A

Bars 0A (Top) not shown for clarity.

1. Top and bottom mats must be continuous through joint.
2. Maintain a constant slab thickness over the bent.
3. 5'-4" as shown on Span Details.
4. Use these details when no full slab width bars A and B are shown on Span Details.
5. Bars 0A (Top) at 9" Max spacing between Bars A (Top).
6. Values in table assume a temperature change of 70° F after erection when calculating thermal movement in one direction (not total).

### TABLE OF (6) ALLOWABLE UNIT LENGTH

| Max Rdwy Grade, Percent | Unit Length Factor |
|---|---|
| 0.00 | 4.1 |
| 1.00 | 3.9 |
| 2.00 | 3.7 |
| 3.00 | 3.5 |
| 4.00 | 3.3 |
| 5.00 | 3.1 |

Unit length must not exceed the length of the shortest end span times the Unit Length Factor shown in table or 400', whichever is less.

### BAR TABLE

| BAR | SIZE |
|---|---|
| A | #4 |
| B | #4 |
| D | #4 |
| T | #4 |
| 0A | #5 |

The details shown on this sheet are applicable for two and three span units comprised of the same girder type.
Units may be comprised of different span lengths. See "Table of Allowable Unit Length".

### GENERAL NOTES:

Designed according to AASHTO LRFD Bridge Design Specifications.

This standard is drawn showing right forward skew. See Bridge Layout for actual skew direction.

### CONSTRUCTION NOTES:

Where multi-span units are indicated on the Bridge Layout, the thickened slab end details and reinforcement shown on IGTS standard (Bars AA, G, H, J, K, and M) and on the Span Details will be omitted where slabs are continuous over interior bents. At these locations, the slab details and reinforcement will be as shown on this sheet or on PCP standard (if using this option).

Thickened slab end reinforcement and details still apply at expansion joint locations (ends of units).

See Span Details for remainder of slab reinforcement and details.

### MATERIAL NOTES:

Provide Grade 60 reinforcing steel.

Provide Class "S" concrete (f'c = 4,000 psi). Provide Class "S" (HPC) if shown elsewhere on the plans.

Provide bar laps, where required, as follows:
Uncoated ~ #4 = 1'-7"
Epoxy Coated ~ #4 = 2'-5"

The details shown on this sheet are applicable for use only with the Prestressed Concrete I-Girder Standard Designs shown on standards IGSD-24, IGSD-28, IGSD-30, IGSD-32, IGSD-38, IGSD-40 and IGSD-44.

HL93 LOADING

Texas Department of Transportation

Bridge Division Standard

# CONTINUOUS SLAB DETAILS

## PRESTR CONC I-GIRDER SPANS

## IGCS

| FILE: igcs1sts-19.dgn | DN: JMH | CK: TxDOT | DW: JTR | CK: TxDOT |
|---|---|---|---|---|
| ©TxDOT August 2017 | CONT | SECT | JOB | HIGHWAY |
| REVISIONS 10-19: Added bubble note 6. | DIST | COUNTY | | SHEET NO. C5.22 |

DISCLAIMER:
The use of this standard is governed by the "Texas Engineering Practice Act". No warranty of any kind is made by TxDOT for any purpose whatsoever. TxDOT assumes no responsibility for the conversion of this standard to other formats or for incorrect results or damages resulting from its use.

DATE:
FILE:

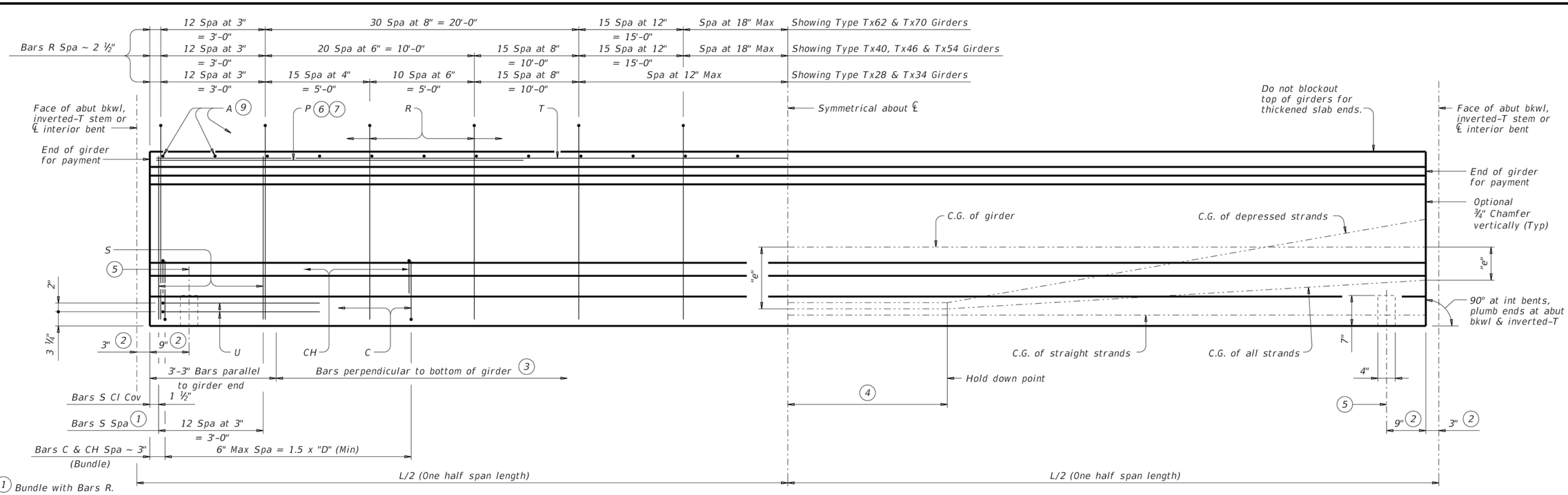


## GIRDER ELEVATION

1. Bundle with Bars R.
2. Measured along ℄ Girder at interior bents; perpendicular to abutment bkwl or inverted-T stem.
3. The average of the top and bottom spacing of Bars R cannot exceed the required spacing.
4. L/20, but not less than 5'-0" (-0,+2').
5. ℄ 4" x 1 ½" Vertical Slotted Hole at doweled girder end [labeled (D) on Bridge Layout]. Required for outside girder only or as shown on substructure details. Anchorage holes may be tapered (4 ¾" x 1 ⅝") at base. If holes are formed with sheet metal, forms may be left in place.
6. Bars P (#6 x 15'-0") required in Tx62 and Tx70 girders. At the fabricator's option bars larger than #6 may be used. When L is less than 50 ft, Bars P are to be the same length as Bars T.
7. Bars P (#6 x 15'-0") are only required in Tx28, Tx34, Tx40, Tx46, and Tx54 girders when "e" at girder ends exceeds 0.25 x "D". At the fabricator's option bars larger than #6 may be used. When L is less than 50 ft, Bars P are to be the same length as Bars T.
8. 1 ⅜" Clear Cover to Bars S.
9. Space Bars A at 6" Max for girders requiring overhang bracket hangers. Space at 12" Max for all other girders. Tie to Bars R as necessary. See standard IGMS for "Deck Forming Notes".
10. Based on 155 pcf total weight of concrete and reinforcing steel.
11. Smooth trowel finish on the slab overhang side of exterior girder.

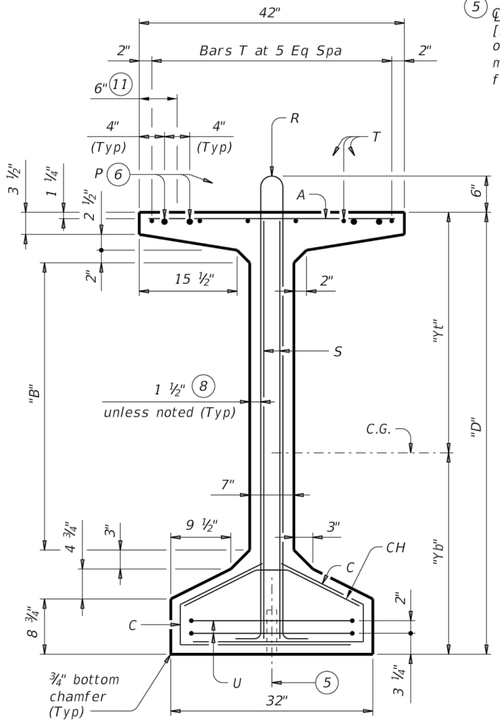


TYPE Tx62 & Tx70

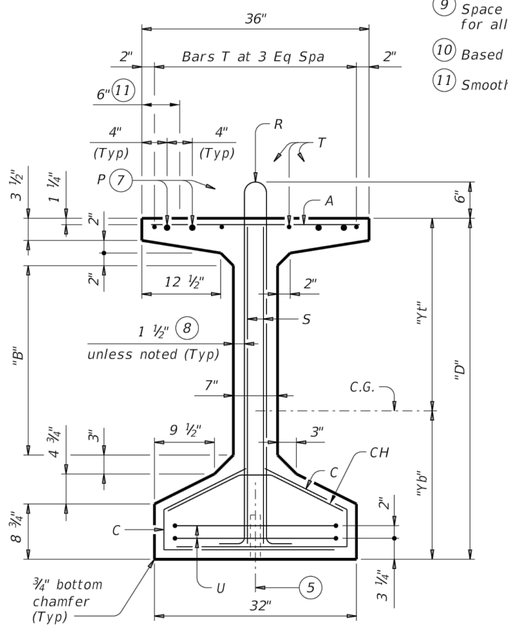


TYPE Tx46 & Tx54

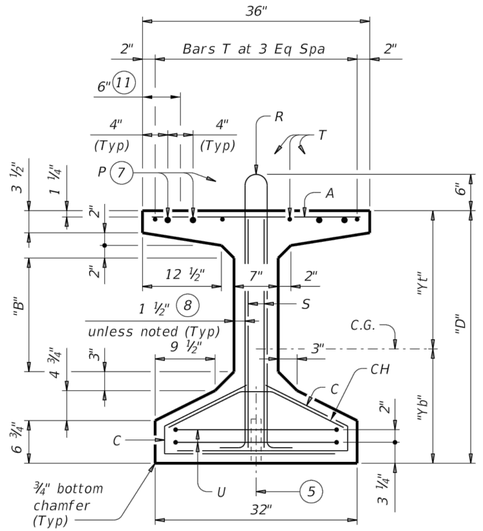


TYPE Tx28, Tx34 & Tx40

## GIRDER DIMENSIONS AND SECTION PROPERTIES

| Girder Type | "D" (in.) | "B" (in.) | "Yt" (in.) | "Yb" (in.) | Area (in.²) | "Ix" (in.⁴) | "Iy" (in.⁴) | Weight (10) (plf) |
|---|---|---|---|---|---|---|---|---|
| Tx28 | 28 | 6 | 15.02 | 12.98 | 585 | 52,772 | 40,559 | 630 |
| Tx34 | 34 | 12 | 18.49 | 15.51 | 627 | 88,355 | 40,731 | 675 |
| Tx40 | 40 | 18 | 21.90 | 18.10 | 669 | 134,990 | 40,902 | 720 |
| Tx46 | 46 | 22 | 25.90 | 20.10 | 761 | 198,089 | 46,478 | 819 |
| Tx54 | 54 | 30 | 30.49 | 23.51 | 817 | 299,740 | 46,707 | 880 |
| Tx62 | 62 | 37 ½" | 33.72 | 28.28 | 910 | 463,072 | 57,351 | 980 |
| Tx70 | 70 | 45 ½" | 38.09 | 31.91 | 966 | 628,747 | 57,579 | 1,040 |

### GENERAL NOTES:

Designed according to AASHTO LRFD Bridge Design Specifications.
Provide Class H concrete.
Provide Grade 60 reinforcing steel.
An equal area of deformed Welded Wire Reinforcement (WWR) (ASTM A1064) may be substituted for Bars A, C, R or T unless otherwise noted.
It is permissible for bars or strands to come in contact with materials used in forming anchor holes.

Cover dimensions are clear dimensions, unless noted otherwise.
Reinforcing bar dimensions shown are out-to-out of bar.

HL93 LOADING

SHEET 1 OF 2

Texas Department of Transportation

Bridge Division Standard

# PRESTRESSED CONCRETE I-GIRDER DETAILS

IGD

| FILE: igdstds1-17.dgn | DN: TxDOT | CK: JMH | DW: JTR | CK: JMH |
|---|---|---|---|---|
| ©TxDOT August 2017 REVISIONS | CONT | SECT | JOB | HIGHWAY |
| | | | | |
| | DIST | COUNTY | | SHEET NO. |
| | | | | C5.23 |

DISCLAIMER:
The use of this standard is governed by the "Texas Engineering Practice Act". No warranty of any kind is made by TxDOT for any purpose whatsoever. TxDOT assumes no responsibility for the conversion of this standard to other formats or for incorrect results or damages resulting from its use.

DATE:
FILE:

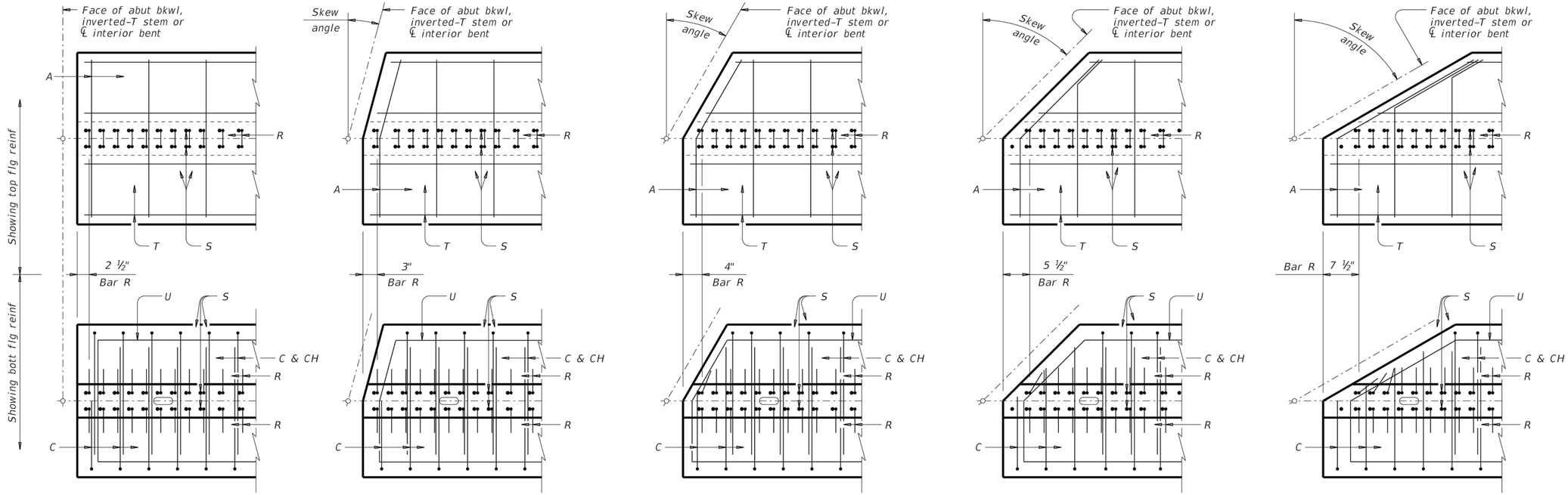


## PLAN OF GIRDER ENDS (12)

To control top flange cracking that may occur during form removal, additional top flange reinforcing may be placed as shown in girder ends at the Fabricator's option.

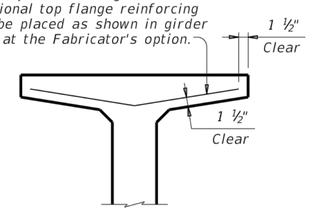


## OPTIONAL TOP FLANGE REINFORCING DETAIL

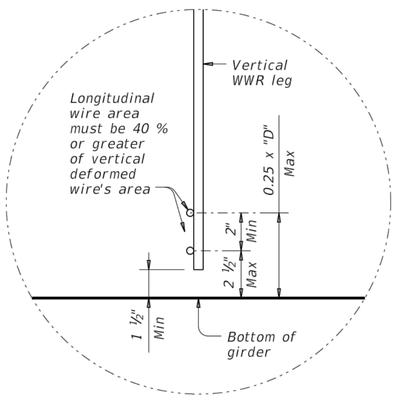


## OPTIONAL WELDED WIRE REINFORCEMENT (WWR) DETAIL

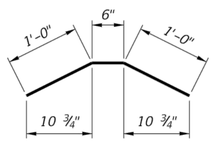


BARS CH (#4)

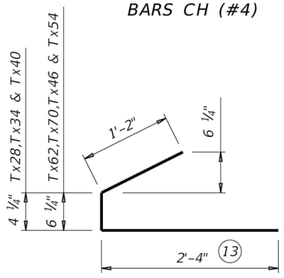


BARS C (#4)

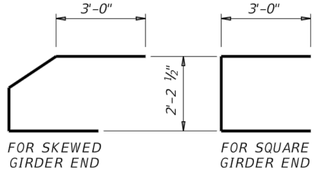


BARS U (#5)

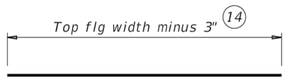


BARS A (#3)

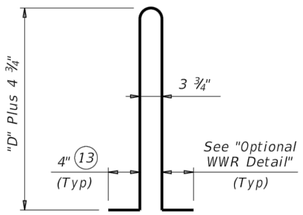


BARS R (#4) (16)




BARS S (#6)

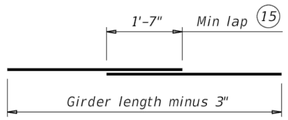


BARS T (#4)

(12) Reinforcing patterns shown are provided as guides to determine reinforcement placement in skewed ends. Place Bars S as close to girder end as cover requirements permit, which may prevent them to be bundled with Bars R.

(13) Bars may be cut or bent at skewed end as required.

(14) Increase as necessary for bars at skewed end.

(15) No portion of bar less than 10 ft.

(16) For Welded Wire Reinforcement (WWR) option, area of Bars R may be reduced in proportion to the increase in reinforcement yield strength over 60 ksi. Yield strength of WWR is limited to 75 ksi.

HL93 LOADING SHEET 2 OF 2

Texas Department of Transportation

Bridge Division Standard

# PRESTRESSED CONCRETE I-GIRDER DETAILS

## IGD

| FILE: igdstds1-17.dgn | DN: TxDOT | CK: JMH | DW: JTR | CK: JMH |
|---|---|---|---|---|
| ©TxDOT August 2017 | CONT | SECT | JOB | HIGHWAY |
| REVISIONS | | | | |
| | DIST | COUNTY | | SHEET NO. |
| | | | | C5.24 |

DISCLAIMER:
The use of this standard is governed by the "Texas Engineering Practice Act". No warranty of any kind is made by TxDOT for any purpose whatsoever. TxDOT assumes no responsibility for the conversion of this standard to other formats or for incorrect results or damages resulting from its use.

DATE:
FILE:

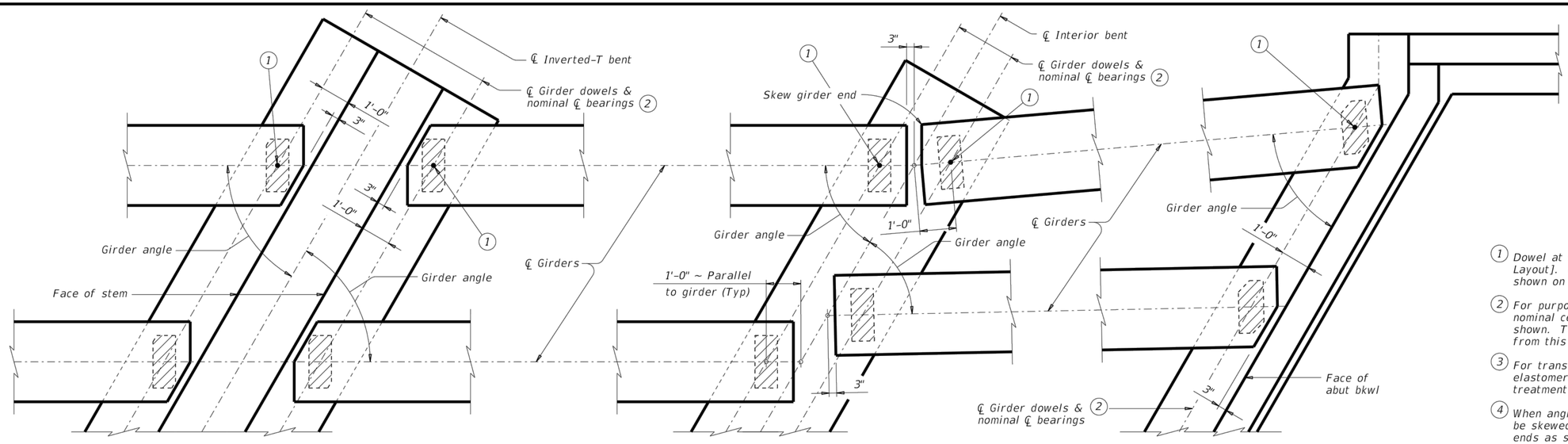


AT INVERTED-T BENT W/SKEW

AT CONVENTIONAL INTERIOR BENT W/SKEW

AT ABUTMENT W/SKEW (3)

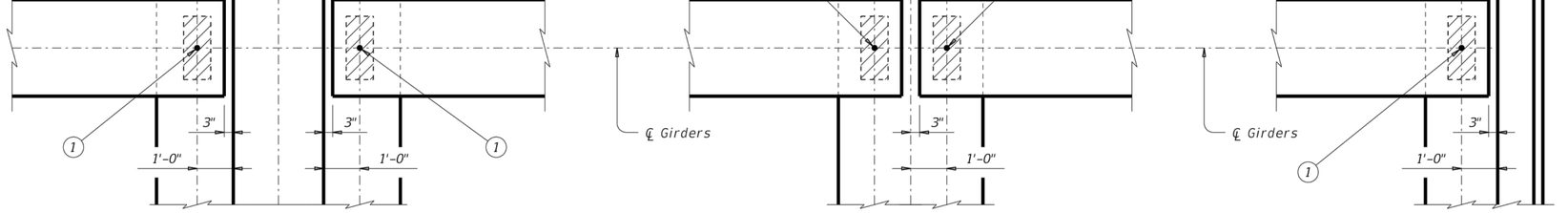


AT INVERTED-T BENT

AT CONVENTIONAL INTERIOR BENT

AT ABUTMENT (3)

## GIRDER END DETAILS

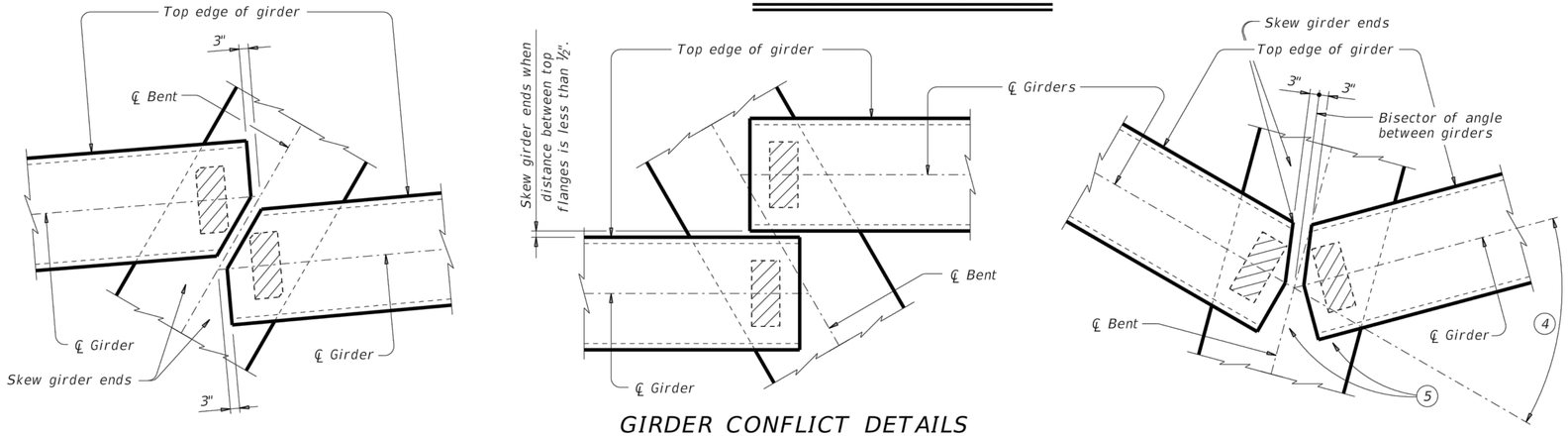


## GIRDER CONFLICT DETAILS

GENERAL NOTES:

These details accommodate skew angles up to 60°.

Shop drawings for approval are required.

A bearing layout which identifies location and orientation of all bearings must be developed by the bearing fabricator. Permanently mark each bearing in accordance with the bearing layout. A copy of the bearing layout is to be provided to the Engineer.

Cost of furnishing and installing elastomeric bearings, including beveled and embedded steel plates, must be included in unit price bid for "Prestressed Concrete Girders".

HL93 LOADING

SHEET 1 OF 3

Texas Department of Transportation

Bridge Division Standard

# ELASTOMERIC BEARING AND GIRDER END DETAILS
## PRESTR CONCRETE I-GIRDERS

IGEB

| FILE: igebsts1-17.dgn | DN: AEE | CK: JMH | DW: JTR | CK: TxDOT |
|---|---|---|---|---|
| ©TxDOT August 2017 | CONT | SECT | JOB | HIGHWAY |
| REVISIONS | | | | |
| | DIST | COUNTY | | SHEET NO. |
| | | | | C5.25 |

DISCLAIMER:
The use of this standard is governed by the "Texas Engineering Practice Act". No warranty of any kind is made by TxDOT for any purpose whatsoever. TxDOT assumes no responsibility for the conversion of this standard to other formats or for incorrect results or damages resulting from its use.

DATE:
FILE:

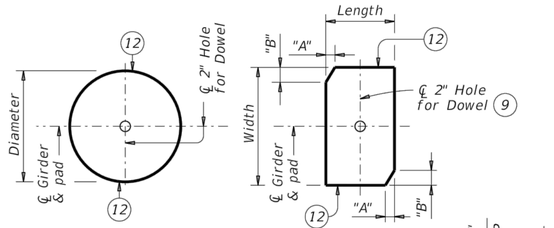


PLANS (10)

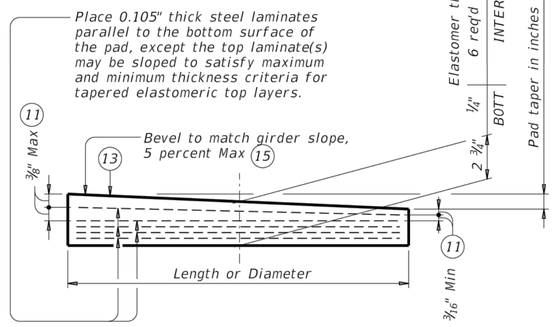


ELEVATION

# LAMINATED ELASTOMERIC BEARING PAD

(50 DUROMETER)

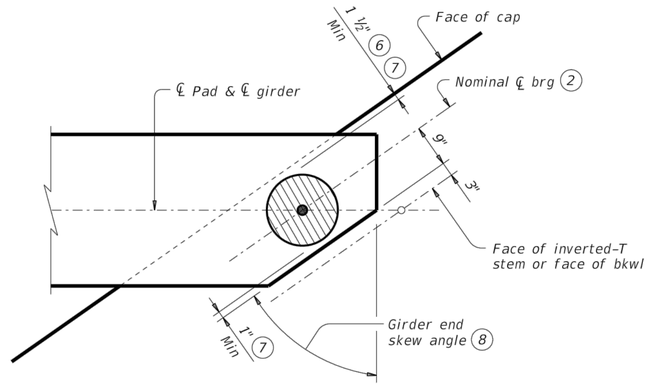


ROUND BEARINGS FOR SKEWED GIRDER ENDS AT FACE OF INVERTED-T STEM OR FACE OF BKWL

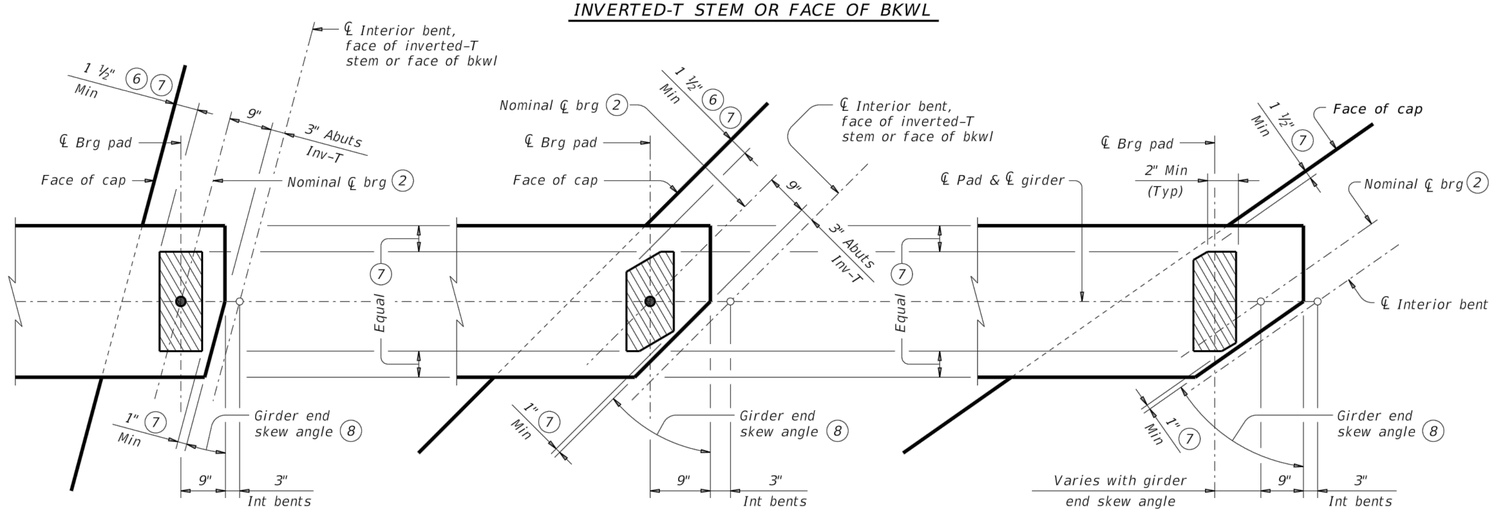


SKEWED GIRDER ENDS AT INT BENTS, FACE OF INVERTED-T STEM OR FACE OF BKWL

SKEWED GIRDER ENDS AT CONVENTIONAL INTERIOR BENTS (16)

(NO GIRDER DOWELS)

## BEARING PAD PLACEMENT DIAGRAMS

**TABLE OF MINIMUM SUBSTRUCTURE DIMENSIONS (14)**

| Girder Type | Abutments | Int Bents | Inv-T Bents |
|---|---|---|---|
| | Face of Bkwl to Face of Cap | Overall Cap Width | Corbel Width |
| Tx28 thru Tx54 | 1'-9" | 3'-6" | 1'-10 ½" |
| Tx62 & Tx70 | 2'-0" | 4'-0" | 2'-1 ½" |

**TABLE OF BEARING PAD DIMENSIONS**

| Bent Type | Girder Type | Bearing Type (13) | Girder End Skew Angle Range | Pad Size Lgth x Wdth | Pad Clip Dimensions "A" | Pad Clip Dimensions "B" |
|---|---|---|---|---|---|---|
| ABUTMENTS, INVERTED-T AND TRANSITION BENTS WITH BACKWALLS | Tx28,Tx34, Tx40,Tx46 & Tx54 | G-1-"N" | 0° thru 21° | 8" x 21" | --- | --- |
| | | G-2-"N" | 21°+ thru 30° | 8" x 21" | 1 ½" | 2 ½" |
| | | G-3-"N" | 30°+ thru 45° | 9" x 21" | 4 ½" | 4 ½" |
| | | G-4-"N" | 45°+ thru 60° | 15" Dia | --- | --- |
| | Tx62 & Tx70 | G-5-"N" | 0° thru 21° | 9" x 21" | --- | --- |
| | | G-6-"N" | 21°+ thru 30° | 9" x 21" | 1 ½" | 2 ½" |
| | | G-7-"N" | 30°+ thru 45° | 10" x 21" | 4 ½" | 4 ½" |
| | | G-8-"N" | 45°+ thru 60° | 10" x 21" | 7 ¼" | 4 ¼" |
| CONVENTIONAL INTERIOR BENTS | Tx28,Tx34, Tx40,Tx46 & Tx54 | --- | --- | --- | --- | --- |
| | | --- | --- | --- | --- | --- |
| | | G-1-"N" | 0° thru 60° | 8" x 21" | --- | --- |
| | Tx62 & Tx70 | G-5-"N" | 0° thru 60° | 9" x 21" | --- | --- |
| CONVENTIONAL INTERIOR BENTS WITH SKEWED GIRDER ENDS (GIRDER CONFLICTS) (16) | Tx28,Tx34, Tx40,Tx46 & Tx54 | G-1-"N" | 0° thru 18° | 8" x 21" | --- | --- |
| | | G-2-"N" | 18°+ thru 30° | 8" x 21" | 1 ½" | 2 ½" |
| | | G-9-"N" | 30°+ thru 45° | 8" x 21" | 3" | 3" |
| | | G-10-"N" | 45°+ thru 60° | 9" x 21" | 6" | 3 ½" |
| | Tx62 & Tx70 | G-5-"N" | 0° thru 18° | 9" x 21" | --- | --- |
| | | G-5-"N" | 18°+ thru 30° | 9" x 21" | --- | --- |
| | | G-11-"N" | 30°+ thru 45° | 9" x 21" | 1 ½" | 1 ½" |
| | | G-12-"N" | 45°+ thru 60° | 9" x 21" | 3" | 1 ¾" |

(2) For purposes of computing bearing seat elevations, nominal centerline of bearing must be defined as shown. The actual center of bearing pad may vary from this line.

(6) 3" for inverted-T.

(7) Place centerline pad as near nominal centerline bearing as possible between limits shown.

(8) Girder end skew angle is equal to 90° minus the girder angle except at some conflicting girders.

(9) Provide 2" dia hole only at locations required. See Substructure details for location.

(10) See Table of Bearing Pad Dimensions for dimensions.

(11) Maximum and minimum layer thicknesses shown are for elastomer only, on tapered layers.

(12) Locate Permanent Mark here.

(13) Indicate BEARING TYPE on all pads. For tapered pads, locate BEARING TYPE on the high side. The Fabricator must include the value of "N" (amount of taper in ⅛" increments) in this mark.
Examples: N=0, (for 0" taper)
N=1, (for ⅛" taper)
N=2, (for ¼" taper)
(etc.)
Fabricated pad top surface slope must not vary from plan girder slope by more than $\left(\frac{0.0625"}{\text{Length or Dia}}\right)$ IN/IN.

(14) Substructure dimensions must satisfy the minimums provided to accommodate the elastomeric bearings shown on this standard.

(15) See sheet 3 of 3 for beveled plate use when slopes exceed 5 percent.

(16) If girder end is skewed for a girder conflict at an interior bent and a beveled sole plate is required, use bearing type for abutments at this location. Location of bearing centerline is to be set as for abutments in this case.

HL93 LOADING SHEET 2 OF 3

Texas Department of Transportation

Bridge Division Standard

# ELASTOMERIC BEARING AND GIRDER END DETAILS

## PRESTR CONCRETE I-GIRDERS

IGEB

| FILE: igebsts1-17.dgn | DN: AEE | CK: JMH | DW: JTR | CK: TxDOT |
|---|---|---|---|---|
| ©TxDOT August 2017 REVISIONS | CONT | SECT | JOB | HIGHWAY |
| | DIST | COUNTY | | SHEET NO. |
| | | | | C5.26 |

DISCLAIMER:
The use of this standard is governed by the "Texas Engineering Practice Act". No warranty of any kind is made by TxDOT for any purpose whatsoever. TxDOT assumes no responsibility for the conversion of this standard to other formats or for incorrect results or damages resulting from its use.

DATE:
FILE:

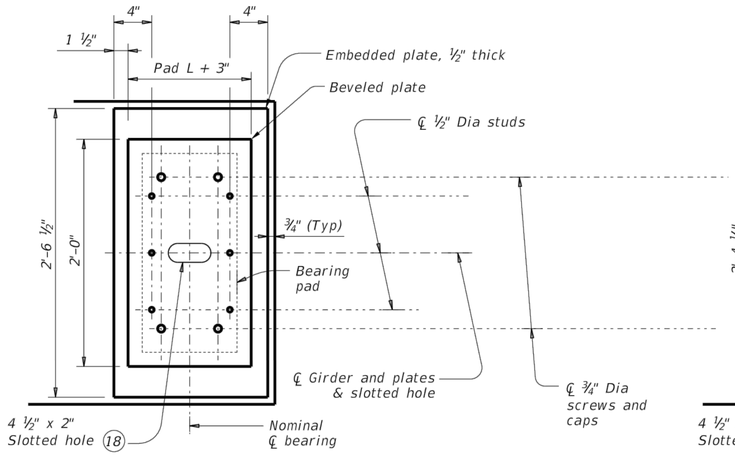


NORMAL GIRDER END
RECTANGULAR BEARING PAD

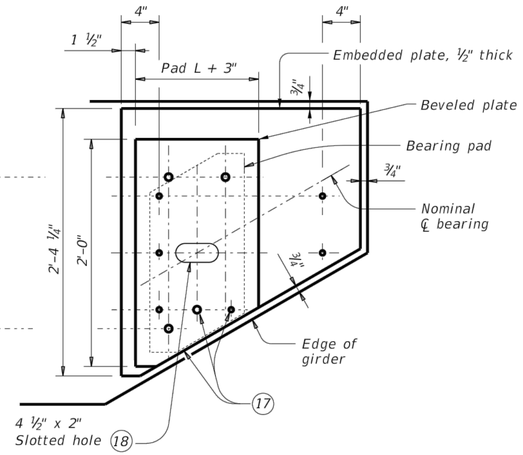


SKEWED GIRDER END
CLIPPED RECTANGULAR BEARING PAD

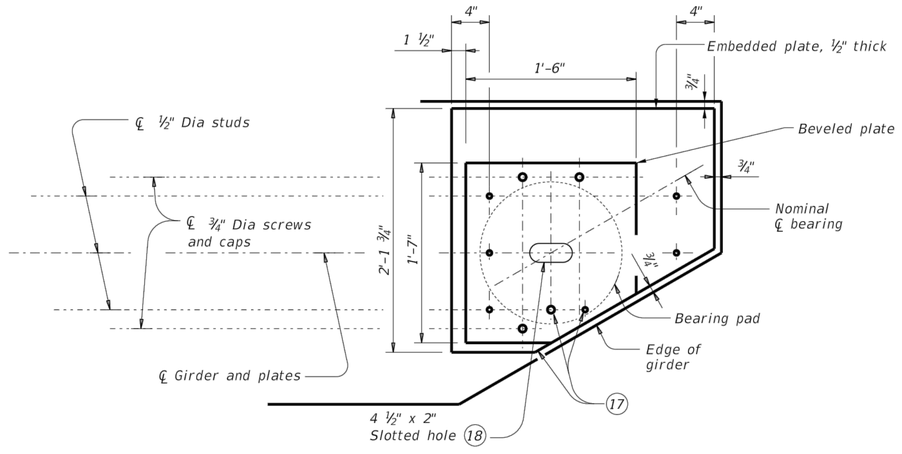


SKEWED GIRDER END
15" DIA BEARING PAD

# PLAN VIEW OF SOLE PLATE DETAILS

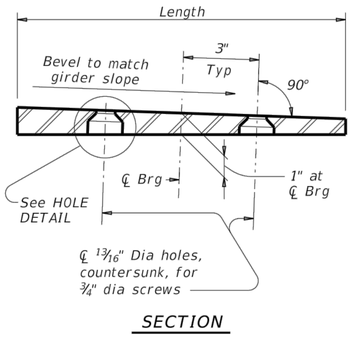


SECTION

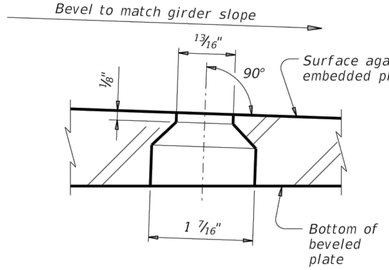


HOLE DETAIL

(17) Cut beveled and embedded plates to match girder end skew. Adjust location of screw and stud as shown when necessary.

(18) Slotted hole is required at doweled girder end locations.

## SOLE PLATE NOTES:

Provide constant thickness elastomeric bearings with beveled and embedded steel sole plates in accordance with these details when the girder slope exceeds 5 percent or if otherwise required in the plans. Provide for all girders in the span.

On the shop drawings, dimension sole plates to the nearest 1⁄16" based on required thickness at centerline of bearing and slope of girder. Thickness tolerance variation from the approved shop drawings is 1⁄16"+/-, except variation from a plane parallel to the theoretical top surface can not exceed 1⁄16" total. Bearing surface tolerances listed in Item 424 apply to embedded and beveled plates.

Steel plate must conform to ASTM A36, A572 Gr 50, or A709 Gr 36 or Gr 50. Hot dip galvanize both the embedded plate and beveled sole plate after fabrication. Seal weld caps to embedded plate before galvanizing.

When determining if relocation of screw holes and studs are necessary for skewed girder ends, minimum clearance from screw or stud centerline to plate edge is 1.25".

Tap threads in the embedded plate only. Drill and tap prior to galvanizing.

¾" Dia screws must be electroplated, socket flat head countersunk cap screws conforming to ASTM F835. Electroplating must conform to ASTM B633, SC 2, Type I. Provide screws long enough to maintain a ¾" minimum embedment into the embedded plate and galvanized cap. Provide galvanized steel caps (16 ga Min) with a nominal 1" inside diameter and deep enough to accommodate the screws, but not less than ½" deep or deeper than 1".

Install beveled sole plates prior to shipping girders. Installed screw heads must not protrude below the bottom of the beveled plate.

# BEVELED PLATE DETAILS

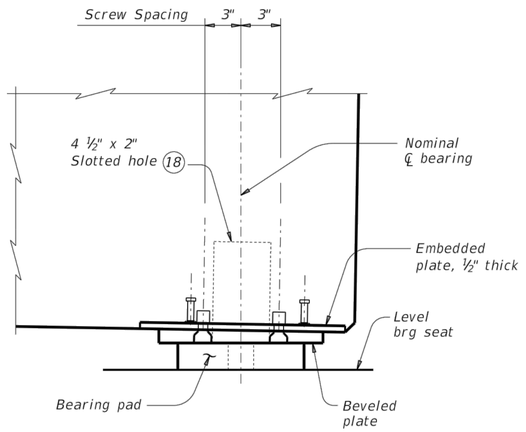


SIDE ELEVATION

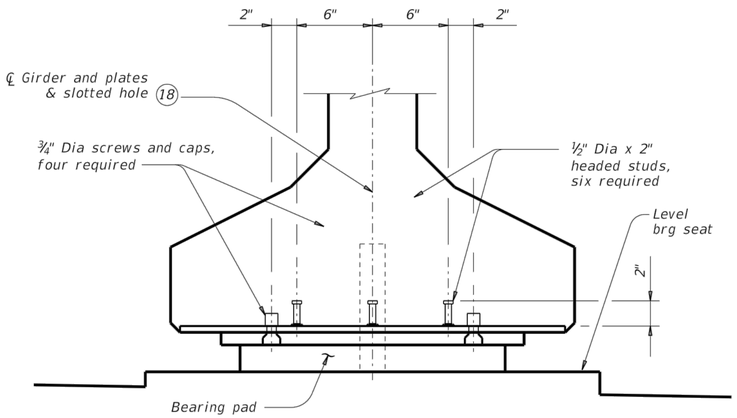


END ELEVATION
Showing normal girder end.

# GIRDER DETAILS

HL93 LOADING SHEET 3 OF 3

Texas Department of Transportation | Bridge Division Standard

# ELASTOMERIC BEARING AND GIRDER END DETAILS
## PRESTR CONCRETE I-GIRDERS

IGEB

| FILE: igebsts1-17.dgn | DN: AEE | CK: JMH | DW: JTR | CK: TxDOT |
|---|---|---|---|---|
| ©TxDOT August 2017 REVISIONS | CONT | SECT | JOB | HIGHWAY |
| | DIST | COUNTY | | SHEET NO. |
| | | | | C5.27 |

DISCLAIMER:
The use of this standard is governed by the "Texas Engineering Practice Act". No warranty of any kind is made by TxDOT for any purpose whatsoever. TxDOT assumes no responsibility for the conversion of this standard to other formats or for incorrect results or damages resulting from its use.

DATE:
FILE:

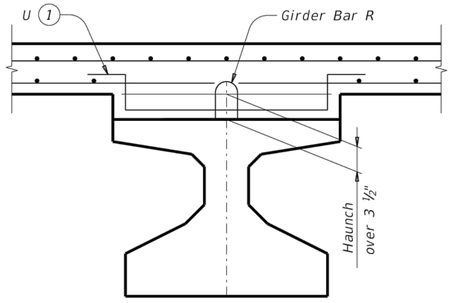


## HAUNCH REINFORCING DETAIL

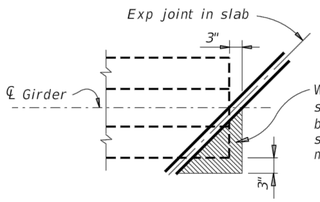


Where flanges project under slab of adjacent span, provide a minimum of ½" clearance between top of girder and bottom of adjacent slab. Polystyrene or other suitable compressible material may be used as a filler.

## TREATMENT AT GIRDER END FOR SKEWED SPANS

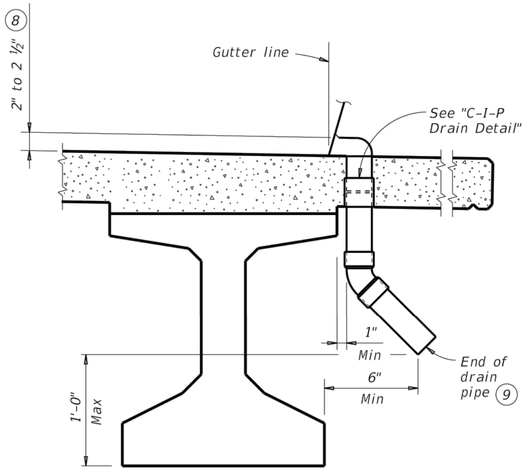


## DRAIN DETAIL (10)

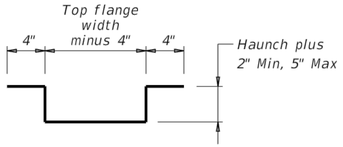


BARS U (#4)

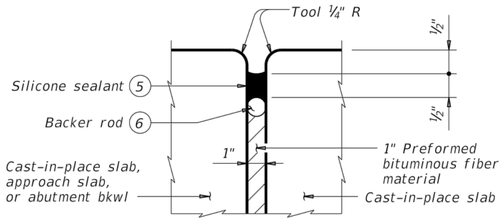


## TYPE A JOINT DETAIL (7)

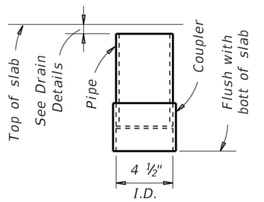


## C-I-P DRAIN DETAIL (2)

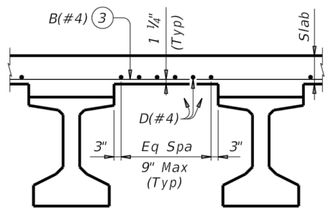


## TYPICAL PART TRANSVERSE SLAB SECTION WITHOUT PCP (4)

Top reinforcing steel not shown for clarity.

(1) Space Bars U with girder Bars R in all areas where measured haunch exceeds 3 ½".

(2) Roughen outside of PVC with coarse rasp or equal to ensure bond with cast-in-place concrete.

(3) Bars B(#4) spaced at 9" Max with 2" end cover. Overhang option, Contractor's may end alternating bars B(#4) at centerline outside girder.

(4) Provide Grade 60 reinforcing steel. Provide bar laps, where required, as follows:
Uncoated ~ #4 = 1'-7"
Epoxy coated ~ #4 = 2'-5"

(5) Class 7 silicone sealant that conforms to DMS-6310. Install when ambient temperature is between 55°F and 85°F and rising. Engineer to determine allowable hours for sealant application.

(6) 1 ¼" backer rod must be compatible with joint sealant. Use of multiple pieces to create a backer rod cross section is not permitted. Top of backer rod must be convex as shown.

(7) The maximum distance between Type A expansion joints is 100'. See Bridge Layout for location of joints. Type A joints are subsidiary to Item 422, "Concrete Superstructures".

(8) Drain entrance formed in rail or sidewalk.

(9) Water may not be discharged onto girders.

(10) All drain pipe and fittings to be 4" diameter (Sch 40) PVC. See Item 481 "Pipe for Drains" for pipe, connections and solvent welding. Bend reinforcing steel to clear PVC 1". Drain length and location is as directed by the Engineer. Drains are not permitted over roadways or railways, or within 10'-0" of bent caps. Degrease outside of exposed PVC, apply acrylic water base primer, then coat with same surface finishing material as used for outside girder face. Variations of the above designs, as required for the type of rail used and its location on the structure, may be installed with the approval and direction of the Engineer.

### GENERAL NOTES:

Designed according to AASHTO LRFD Bridge Design Specifications.

All items (reinforcing steel, drains, joint formers, etc.) shown on this sheet are subsidiary to other bid items.

Cover dimensions are clear dimensions, unless noted otherwise.

Reinforcing bar dimensions shown are out-to-out of bar.

### DECK FORMWORK NOTES:

Overhang bracket hangers are limited to a safe working load of 3,600 lbs, applied to and along the axis of a coil rod at 45 degrees from vertical, regardless of higher loads permitted by hanger manufacturers. Do not place a hanger less than 12" from girder end. Space hangers accordingly.



Texas Department of Transportation

Bridge Division Standard

# MISCELLANEOUS SLAB DETAILS

## PRESTR CONCRETE I-GIRDERS

## IGMS

| FILE: igmssts1-17.dgn | DN: TxDOT | CK: TxDOT | DW: JTR | CK: TxDOT |
|---|---|---|---|---|
| ©TxDOT August 2017 | CONT | SECT | JOB | HIGHWAY |
| REVISIONS | | | | |
| | DIST | COUNTY | | SHEET NO. |
| | | | | C5.28 |

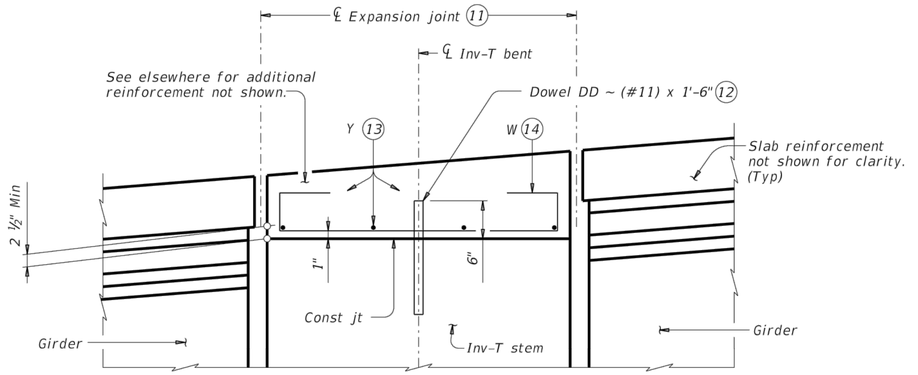


SHOWING EXPANSION JOINTS

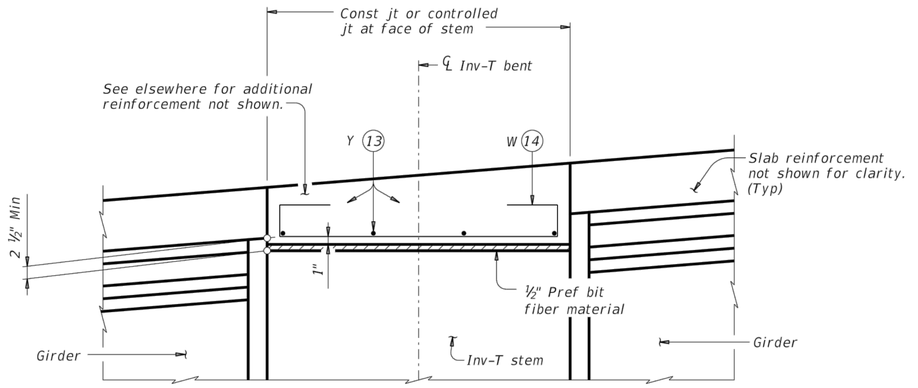


SHOWING CONST JTS OR CONTROLLED JTS

## REINFORCEMENT OVER INV-T BENTS

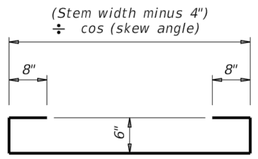


BARS W (#4)

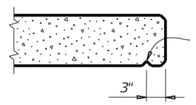


## DRIP BEAD DETAIL

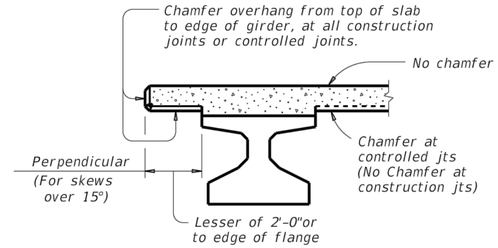


## CHAMFER LIMITS DETAIL (15)

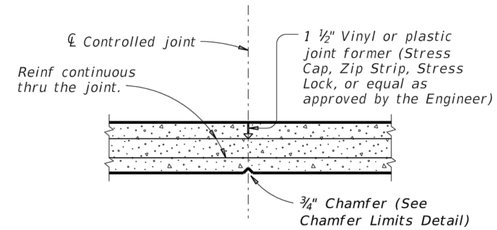


## CONTROLLED JOINT DETAIL

(Saw-cutting is not allowed)

(11) See Layout for joint type.

(12) Dowels DD (#11) spaced at 5 Ft Max. See Inv-T bents for quantity and location.

(13) Space Bars Y (#4) at 12" Max. Use 2" end cover. Number of Bars Y must satisfy spacing limit. Place parallel to bent.

(14) Space Bars W at 12" Max (3" from end of cap). Tilt if necessary to maintain cover requirements. Place parallel to longitudinal slab reinforcement.

(15) See Span details for type of joint and joint locations.

DISCLAIMER:
The use of this standard is governed by the "Texas Engineering Practice Act". No warranty of any kind is made by TxDOT for any purpose whatsoever. TxDOT assumes no responsibility for the conversion of this standard to other formats or for incorrect results or damages resulting from its use.

DATE:
FILE:

SHEET 2 OF 2

Texas Department of Transportation

Bridge Division Standard

# MISCELLANEOUS SLAB DETAILS

## PRESTR CONCRETE I-GIRDERS

IGMS

| FILE: igmssts1-17.dgn | DN: TxDOT | CK: TxDOT | DW: JTR | CK: TxDOT |
|---|---|---|---|---|
| ©TxDOT August 2017 | CONT | SECT | JOB | HIGHWAY |
| REVISIONS | | | | |
| | DIST | COUNTY | | SHEET NO. |
| | | | | C5.29 |

DISCLAIMER:
The use of this standard is governed by the "Texas Engineering Practice Act". No warranty of any kind is made by TxDOT for any purpose whatsoever. TxDOT assumes no responsibility for the conversion of this standard to other formats or for incorrect results or damages resulting from its use.

DATE:
FILE:

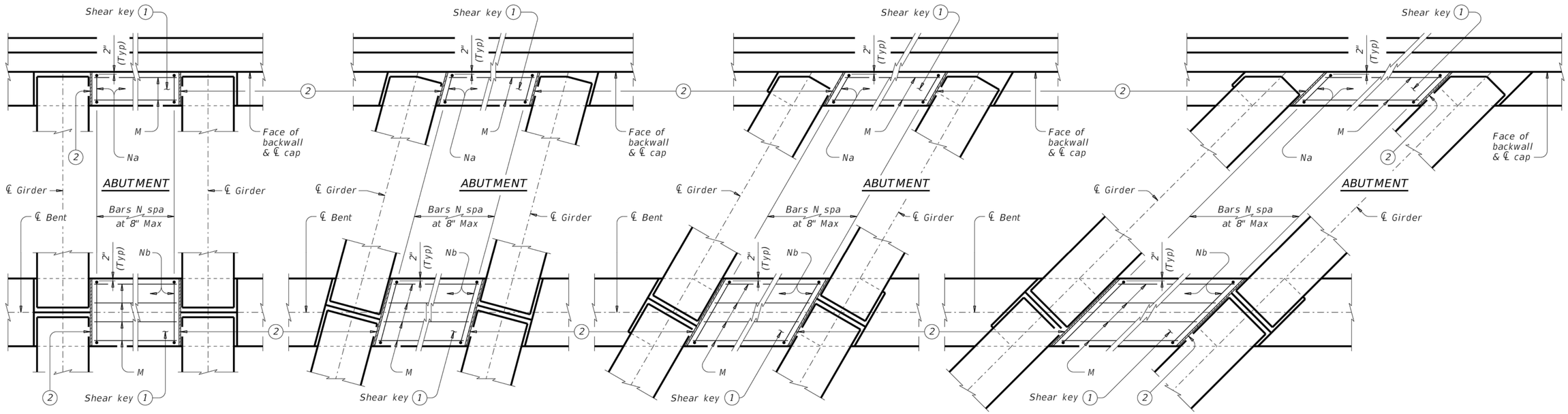


## PARTIAL PLANS WITH NO SKEW

Showing shear keys on 3'–6" wide caps. 4'–0" caps similar.

## PARTIAL PLANS WITH 15° SKEW

Showing shear keys on 3'–6" wide caps. 4'–0" caps similar.

## PARTIAL PLANS WITH 30° SKEW

Showing shear keys on 3'–6" wide caps. 4'–0" caps similar.

## PARTIAL PLANS WITH 45° SKEW

Showing shear keys on 3'–6" wide caps. 4'–0" caps similar.

(1) Place shear keys on the upstream side of structure between outside girder and next adjacent girder, unless shown otherwise on plans.

(2) UHMW polyethylene wear pad. (Typ)

(3) Leave a ¼" gap plus or minus between girder and face of wear pad. Cast wear pad with shear key, smooth side facing girder. Care must be taken to keep concrete from flowing under girder. Slope top of shear keys in accordance with Item 420.4.9, "Treatment and Finishing of Horizontal Surfaces."

(4) Measure at higher bearing seat elevation forward or back. Dimension based on typical bearing pad and bearing seat. Increase as necessary to maintain 5" overlap.

(5) With No Skew = 1'–8 ¼", measured along ℄ cap.
With Skew = 1'–8 ¼" ∗ Cos Skew, measured along ℄ cap.

(6) With No Skew = 1'–4 ¼", measured along ℄ cap.
With Skew = 1'–4 ¼" ∗ Cos Skew, measured along ℄ cap.

(7) Face of UHMW polyethylene wear pad. Smooth side of pad facing girder.

(8) Abutments = ½ Cap width.
Interior bents = Cap width.

(9) Abutments = ½ Cap width ∗ Cos Skew.
Interior bents = Cap width ∗ Cos Skew.

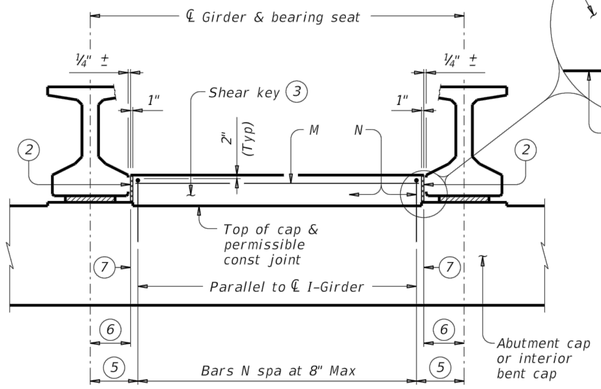


## PARTIAL ELEVATION OF ABUTMENT OR INTERIOR BENT CAP (1)

Showing shear key with girder Type Tx46. Other I-Girder types similar.

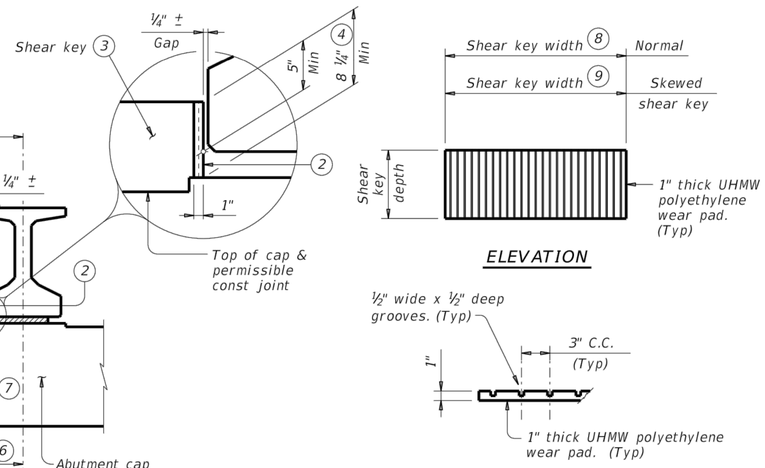


## ULTRA HIGH MOLECULAR WEIGHT (UHMW) POLYETHYLENE WEAR PAD DETAILS

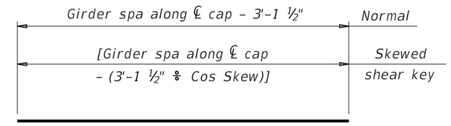


BARS M (#5)

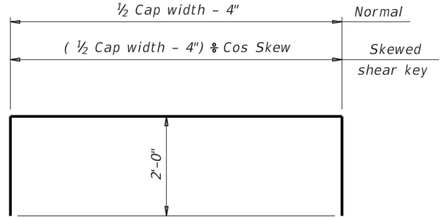


BARS Na (#5)
(For abutments)

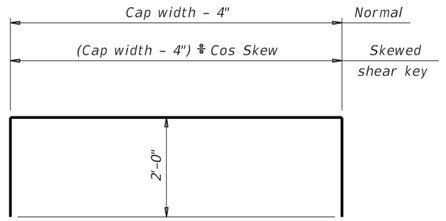


BARS Nb (#5)
(For interior bents)

### CONSTRUCTION NOTES:

Provide Class "C" concrete ($f'_c$ = 3,600 psi). Provide Class "C" (HPC) if shown elsewhere on the plans.

Provide Grade 60 reinforcing steel.

Provide epoxy coated reinforcing steel for shear key if abutment or interior bent reinforcing steel is epoxy coated.

Provide Ultra High Molecular Weight (UHMW) polyethylene wear pads in accordance with ASTM D6712.

### GENERAL NOTES:

Designed according to AASHTO LRFD Bridge Design Specifications.

Details showing skew are drawn showing right forward skew. See Bridge Layout for actual skew direction.

These details are limited to bridges skewed 45 degrees and less.

This standard is only applicable for I-Girders.

Modify details for bearing conditions, and girder spacing not shown on this standard. Details do not account for sole plate or pedestal bearing seat.

Include shear key concrete in abutment or bent concrete for payment.

UHMW polyethylene wear pads are subsidiary to Class "C" concrete.

Cover dimensions are clear dimensions, unless noted otherwise.
Reinforcing bar dimensions shown are out-to-out of bar.

Texas Department of Transportation

Bridge Division Standard

# SHEAR KEY DETAILS
## PRESTR CONCRETE I-GIRDERS

IGSK

| FILE: igskstds-17.dgn | DN: TxDOT | CK: TxDOT | DW: JTR | CK: AES |
|---|---|---|---|---|
| ©TxDOT August 2017 REVISIONS | CONT | SECT | JOB | HIGHWAY |
| | DIST | COUNTY | | SHEET NO. |
| | | | | C5.30 |

DISCLAIMER:
The use of this standard is governed by the "Texas Engineering Practice Act". No warranty of any kind is made by TxDOT for any purpose whatsoever. TxDOT assumes no responsibility for the conversion of this standard to other formats or for incorrect results or damages resulting from its use.

DATE:
FILE:

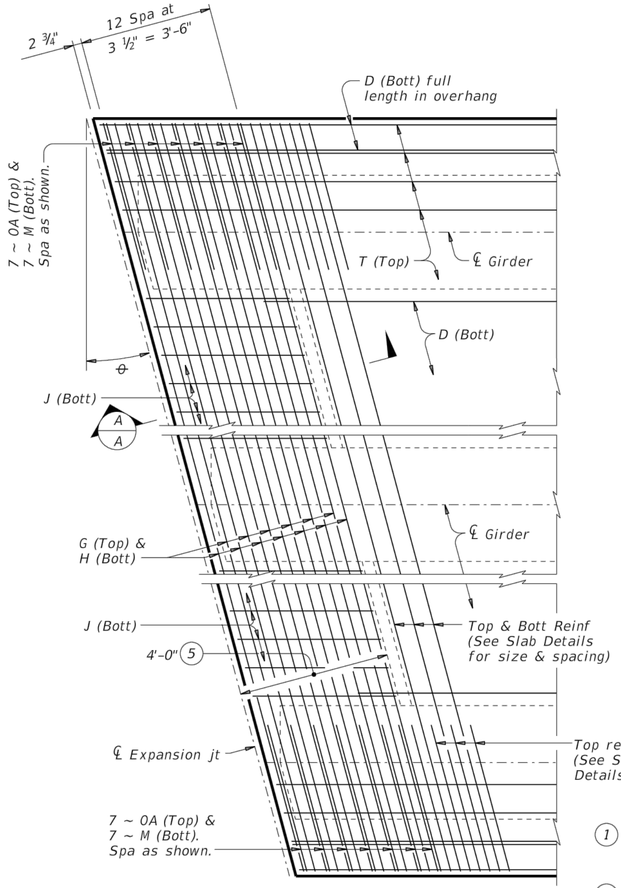


## PARTIAL PLAN FOR SLABS WITHOUT BREAKBACK

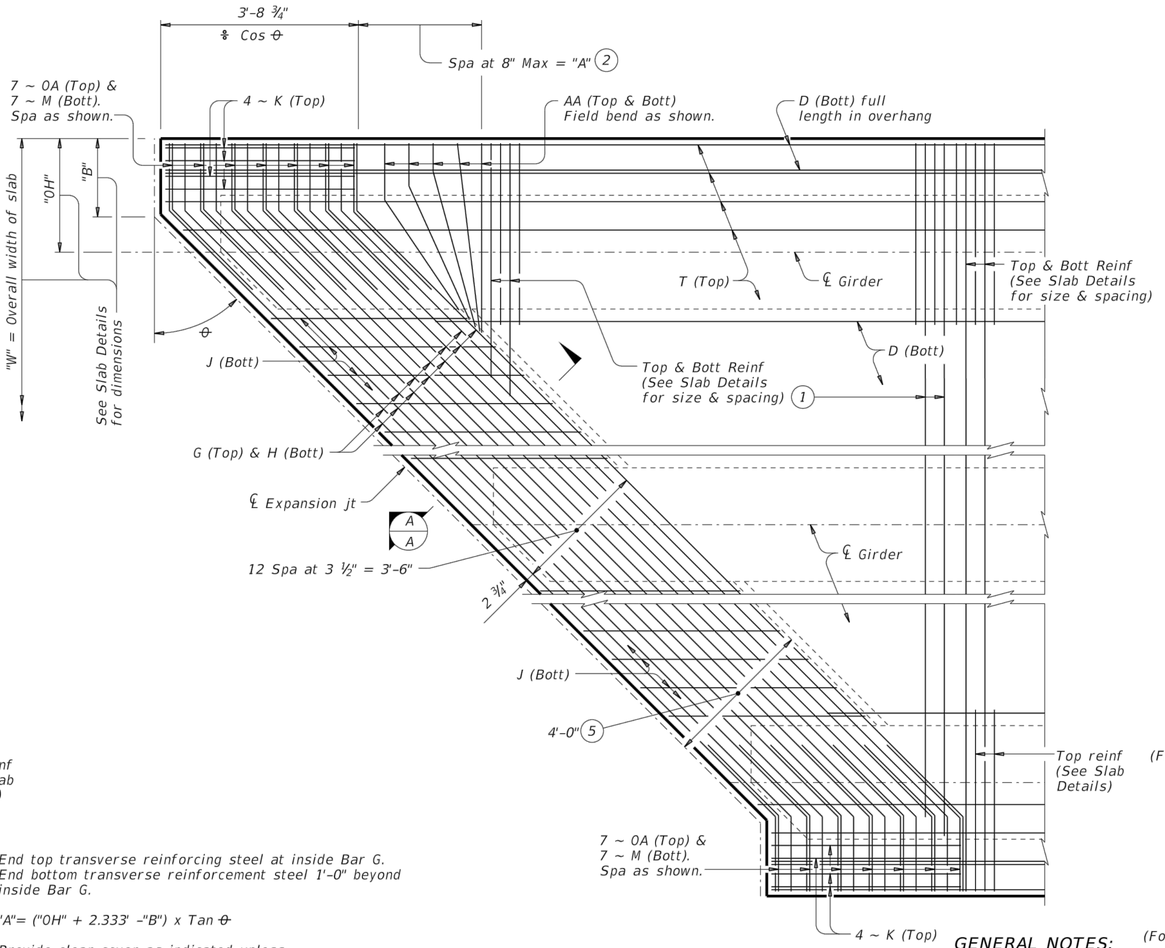


## PARTIAL PLAN FOR SLABS WITH BREAKBACK

(1) End top transverse reinforcing steel at inside Bar G. End bottom transverse reinforcement steel 1'-0" beyond inside Bar G.

(2) "A"= ("0H" + 2.333' -"B") x Tan θ

(3) Provide clear cover as indicated unless otherwise shown on Span Details.

(4) Only required on slabs with breakbacks.

(5) Thickened slab end dimensioned perpendicular to face of bkwl, centerline interior bent or face of inverted-T stem.

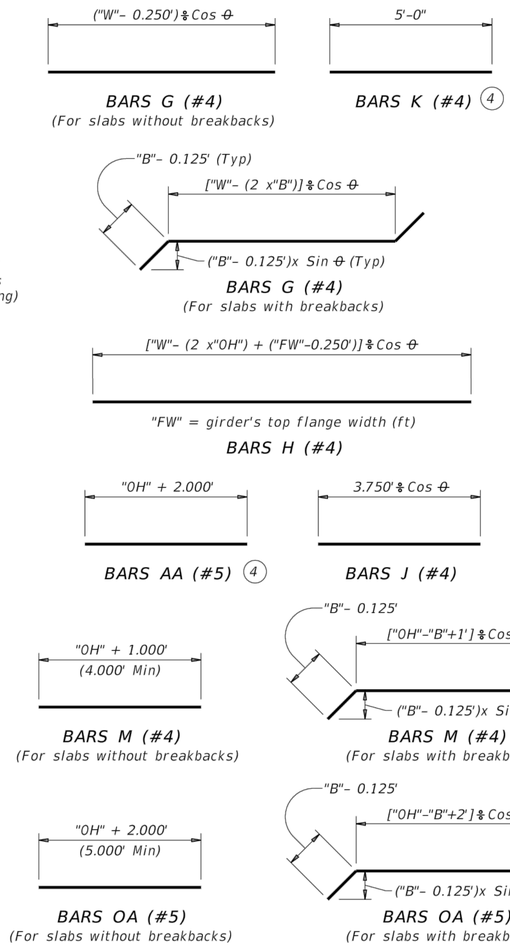


### GENERAL NOTES:

Designed according to AASHTO LRFD Bridge Design Specifications.
These details are restricted to Prestressed Concrete I-Girder Spans.
These details are to be used in conjunction with the Span Details and PCP standard (if prestressed concrete panels are used).
When Option 2 from PCP standard is used, provide Bars AA, G, K and OA in the slab.

### MATERIAL NOTES:

Provide Grade 60 reinforcing steel.
If slab reinforcing steel is shown on the Slab Details to be epoxy coated, then Bars AA, G, K, H, J, M and OA must be epoxy coated.
Provide bar laps, where required, as follows:
Uncoated ~ #4 = 1'-7"
Epoxy Coated ~ #4 = 2'-5"

Cover dimensions are clear dimensions, unless noted otherwise.
Reinforcing bar dimensions shown are out-to-out of bar.

HL93 LOADING

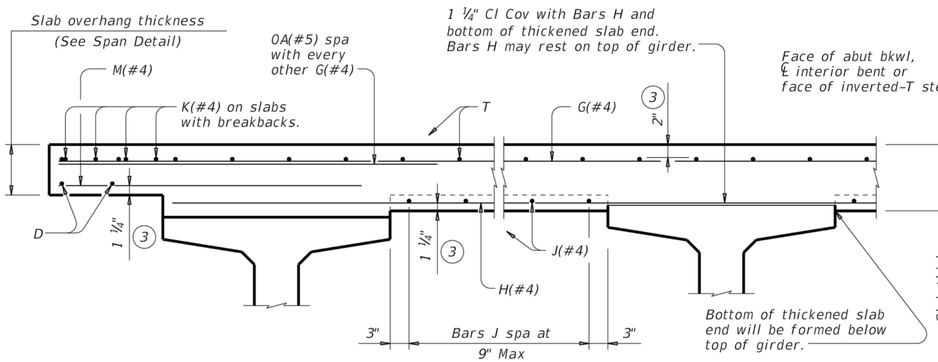


2" AND MORE OF HAUNCH — LESS THAN 2" OF HAUNCH

## TYPICAL TRANSVERSE SECTION

(Showing Prestressed Conc I-Girders at ℄ Brg)

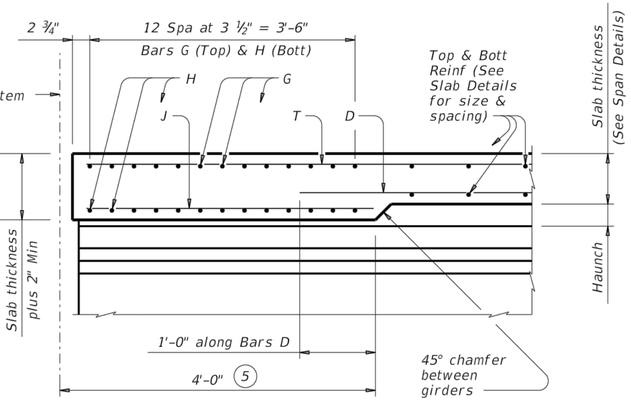


## SECTION A-A

(Showing with 2" and more of haunch)

Bridge Division Standard

Texas Department of Transportation

# THICKENED SLAB END DETAILS

## PRESTRESSED CONCRETE I-GIRDER SPANS

## IGTS

| FILE: igtssts1-17.dgn | DN: TxDOT | CK: TxDOT | DW: JTR | CK: TxDOT |
|---|---|---|---|---|
| ©TxDOT August 2017 | CONT | SECT | JOB | HIGHWAY |
| REVISIONS | | | | |
| | DIST | COUNTY | | SHEET NO. |
| | | | | C5.31 |

DISCLAIMER:
The use of this standard is governed by the "Texas Engineering Practice Act". No warranty of any kind is made by TxDOT for any purpose whatsoever. TxDOT assumes no responsibility for the conversion of this standard to other formats or for incorrect results or damages resulting from its use.

DATE:
FILE:

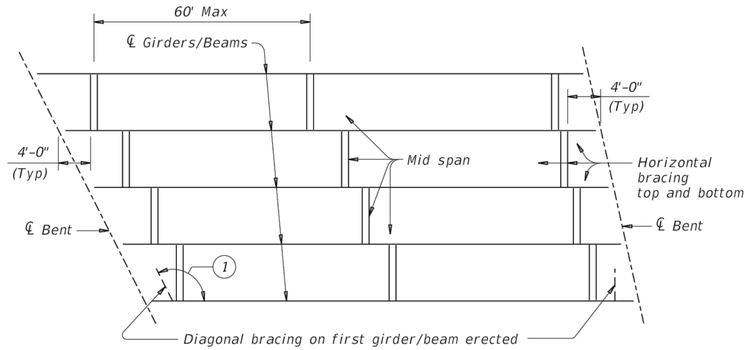


## ERECTION BRACING

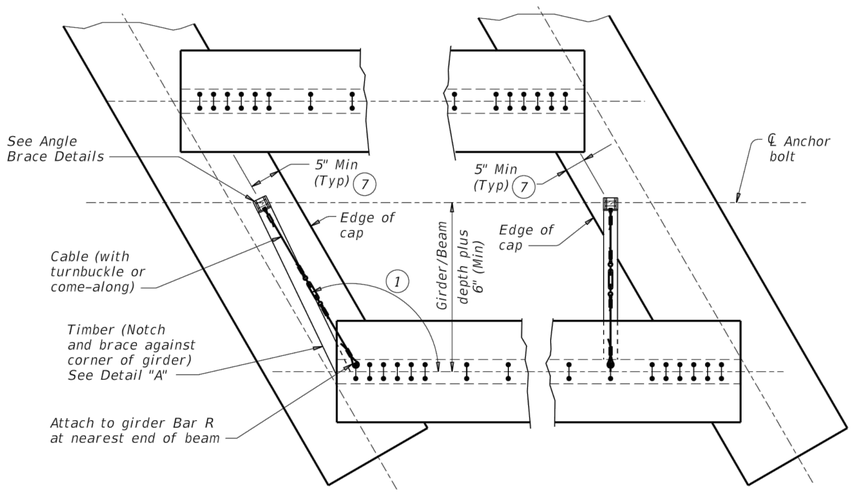


PLAN

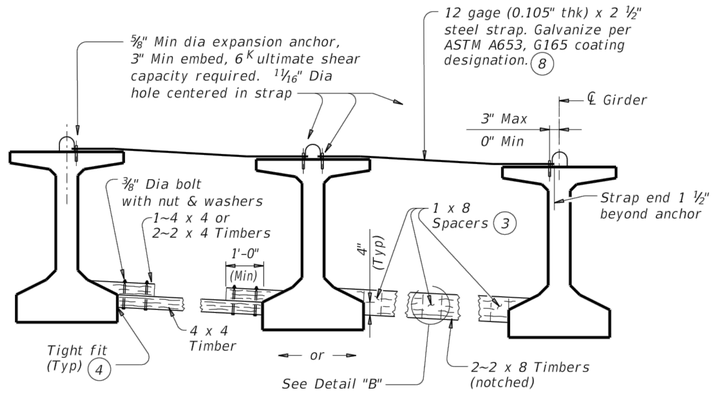


FOR ERECTION BRACING, OPTION 1

(This option is not allowed when slab is formed with PMDF or plywood.)

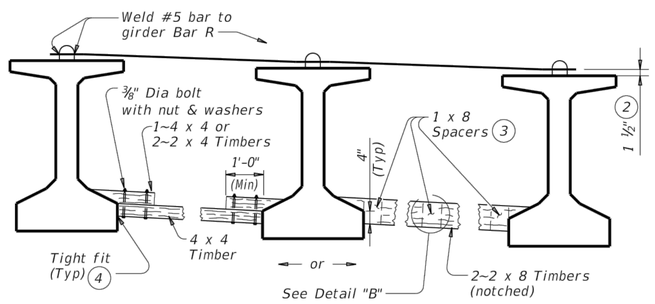


FOR ERECTION BRACING, OPTION 2

## HORIZONTAL BRACING DETAILS 5

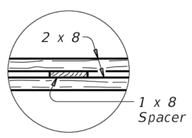


PLAN

## DETAIL "B"

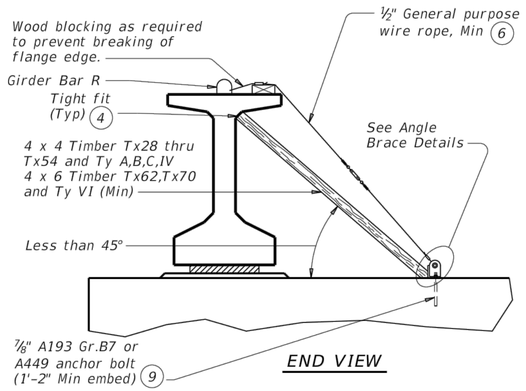


END VIEW

## DIAGONAL BRACING DETAILS 5

(To be used on both ends of the first girder/beam erected in the span in each phase.)

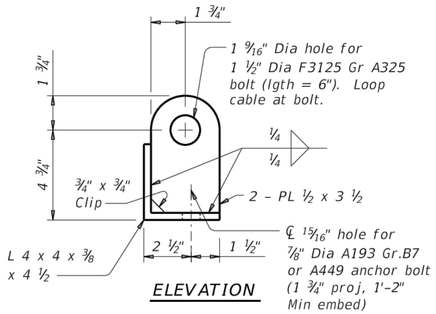


ELEVATION

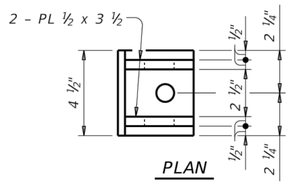


PLAN

## ANGLE BRACE DETAILS

### HAULING & ERECTION:

The Contractor's attention is directed to the possible lateral instability of prestressed concrete girders and beams over 130' long, especially during hauling and erection. The use of the following methods to improve stability is encouraged: Locate lifting devices at the maximum practical distance from girder ends; use external lateral stiffening devices during hauling and erection; lift with vertical lines using two machines; and take care in handling to minimize inertial and impact forces.

### ERECTION BRACING:

Erection bracing details shown are considered the minimum for fulfilling the bracing requirements of Item 425.

Required erection bracing must be placed immediately after erection of each girder and remain in place until additional bracing as required for slab placement is in place. This standard is needed in all cases to meet requirements for Slab Placement Bracing.

### PHASED CONSTRUCTION:

Place erection and slab placement bracing for all girders in a phase as shown in these details. For phases after first, also place erection and slab placement bracing between outer girder of completed phase and adjacent girder of current phase. When the phase construction joint is between girders, top bracing can be omitted.

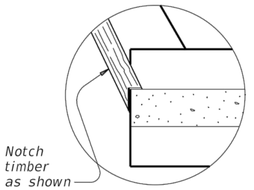


## DETAIL "A"

(1) If angle shown exceeds 120 degrees, move diagonal brace to other side of girder/beam and place square to girder/beam. This may prevent exterior girder from being erected first.

(2) Place and weld #5 bars as shown during erection. If forming deck with prestressed panels, bars can be temporarily removed, one at a time, during panel erection. Re-install bar prior to additional panel erection. Bars can rest on panels and be bent down and welded to girder Bars R (See Sheet 2 of 2).

(3) Clear distance between spacers must not exceed 3'. Nail together with 16d nails.

(4) Use wedges as necessary to obtain tight fit. Nail wedges to timbers.

(5) Pressure treated landscape timbers can not be used.

(6) All hardware used with cable must be able to develop a minimum 25 kips breaking strength. Use thimbles at all loops in cable. Install cable clamps with saddles bearing against the live end and U-bolts bearing aginst the dead end.

(7) It is acceptable to tie anchor bolts to cap reinforcement.

(8) Prior to installing, field bend strap to lay flush on both girders' top flange and slope between flange tips.

(9) Anchor bolt may be drilled and epoxied in place. Provide 25k minimum pullout. Core drill hole.



Texas Department of Transportation

Bridge Division Standard

# MINIMUM ERECTION AND BRACING REQUIREMENTS

## PRESTRESSED CONCRETE I-GIRDERS AND I-BEAMS

## MEBR(C)

| FILE: mebcsts1-17.dgn | DN: TxDOT | CK: TxDOT | DW: TxDOT | CK: TxDOT |
|---|---|---|---|---|
| ©TxDOT August 2017 | CONT | SECT | JOB | HIGHWAY |
| REVISIONS | | | | |
| | DIST | COUNTY | | SHEET NO. |
| | | | | C5.32 |

DISCLAIMER:
The use of this standard is governed by the "Texas Engineering Practice Act". No warranty of any kind is made by TxDOT for any purpose whatsoever. TxDOT assumes no responsibility for the conversion of this standard to other formats or for incorrect results or damages resulting from its use.

DATE:
FILE:

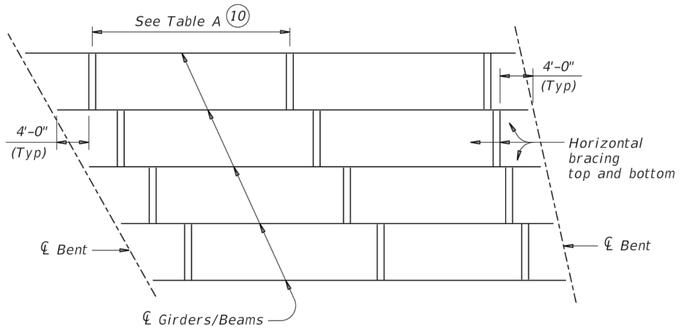


## SLAB PLACEMENT BRACING

## TABLE A

### OPTION 1-RIGID BRACING (STEEL STRAP)

| Girder or Beam Type | Maximum Bracing Spacing | |
|---|---|---|
| | Slab Overhang less than 4'-0" (11) | Slab Overhang 4'-0" and greater (11) |
| Tx28 | ¼ points | ¼ points |
| Tx34 | ¼ points | ¼ points |
| Tx40 | ¼ points | ⅛ points |
| Tx46 | ¼ points | ⅛ points |
| Tx54 | ¼ points | ⅛ points |
| Tx62 | ¼ points | ⅛ points |
| Tx70 | ¼ points | ⅛ points |
| | | |
| A | ⅛ points | ⅛ points |
| B | ⅛ points | ⅛ points |
| C | ⅛ points | ⅛ points |
| IV | ¼ points | ⅛ points |
| VI | ¼ points | ⅛ points |

### OPTION 2-FLEXIBLE BRACING (NO. 5 OVER PCP)

| Girder or Beam Type | Maximum Bracing Spacing | |
|---|---|---|
| | Slab Overhang less than 4'-0" (11) | Slab Overhang 4'-0" and greater (11) |
| Tx28 | ¼ points | ⅛ points |
| Tx34 | ¼ points | ⅛ points |
| Tx40 | ¼ points | ⅛ points |
| Tx46 | ¼ points | ⅛ points |
| Tx54 | ¼ points | ⅛ points |
| Tx62 | ¼ points | ⅛ points |
| Tx70 | ¼ points | ⅛ points |
| | | |
| A | 2.0 ft | 1.5 ft |
| B | 3.0 ft | 2.0 ft |
| C | 4.5 ft | 2.0 ft |
| IV | ¼ points | 4.0 ft |
| VI | ¼ points | 4.0 ft |

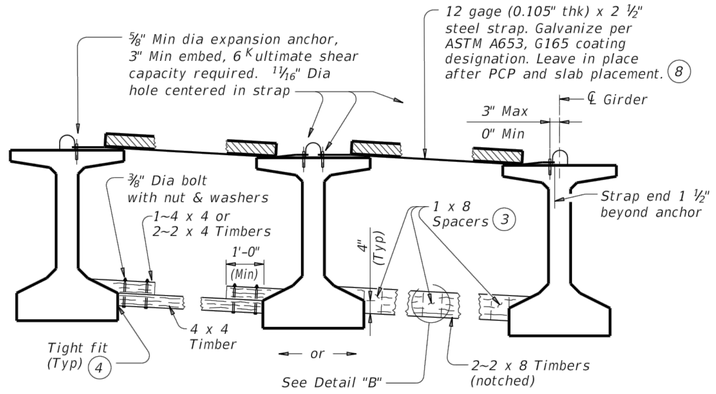


FOR SLAB PLACEMENT BRACING, OPTION 1 - RIGID

(Showing slab formed with PCP. This option is not allowed when slab is formed with PMDF or plywood.)

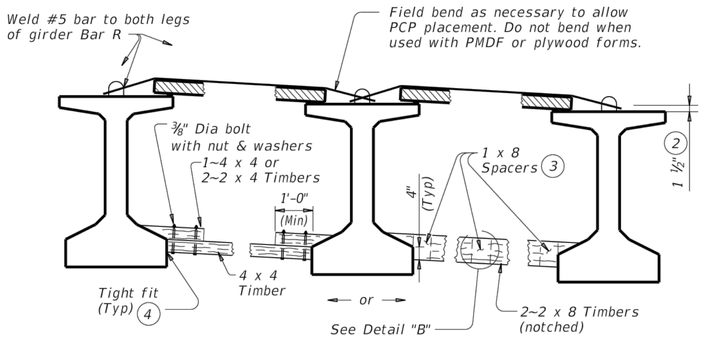


FOR SLAB PLACEMENT BRACING, OPTION 2 - FLEXIBLE

(Showing slab formed with PCP.)

## HORIZONTAL BRACING DETAILS (5)

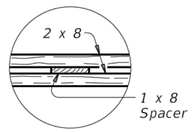


PLAN

## DETAIL "B"

(2) Place and weld #5 bars as shown during erection. If forming deck with prestressed panels, bars can be temporarily removed, one at a time, during panel erection. Re-install bar prior to additional panel erection. Bars can rest on panels and be bent down and welded to girder Bars R.

(3) Clear distance between spacers must not exceed 3'. Nail together with 16d nails.

(4) Use wedges as necessary to obtain tight fit. Nail wedges to timbers.

(5) Pressure treated landscape timbers can not be used.

(8) Prior to installing, field bend strap to lay flush on both girders' top flange and slope between flange tips.

(10) Bracing spacing ( ¼ and ⅛ points ) measured between first and last typical brace location.

(11) Measure slab overhang from centerline of girder or beam. When overhang varies in span, determine bracing spacing based on largest overhang.

### SLAB PLACEMENT BRACING:

The details for slab placement bracing are considered minimum for fulfilling the requirements of Specification Items 422 and 425.

Required slab placement bracing must remain in place until slab concrete has attained a compressive strength of 3000 psi.

### GENERAL NOTES:

Bracing details for spans longer than 150' are not provided. The Contractor must submit proposed bracing details for such conditions to the Engineer for approval prior to erection.

Systems equal to or better than those shown may be used provided details of such systems are submitted to and approved by the Engineer prior to erection.

Use of these systems or details does not relieve the Contractor of the responsibility for the adequacy of the bracing and the safety of the structure.

Removal of bracing for short periods of time to align girders and beams is permissible.

All turn-buckles, come-alongs, anchors and other connections must be capable of developing the full strength of the cable shown.

Furnish anchor bolts and nuts in accordance with Item 449, "Anchor Bolts".



Texas Department of Transportation

Bridge Division Standard

# MINIMUM ERECTION AND BRACING REQUIREMENTS

## PRESTRESSED CONCRETE I-GIRDERS AND I-BEAMS

## MEBR(C)

| FILE: mebcsts1-17.dgn | DN: TxDOT | CK: TxDOT | DW: TxDOT | CK: TxDOT |
|---|---|---|---|---|
| ©TxDOT August 2017 | CONT | SECT | JOB | HIGHWAY |
| REVISIONS | | | | |
| | DIST | COUNTY | | SHEET NO. |
| | | | | C5.33 |

DISCLAIMER:
The use of this standard is governed by the "Texas Engineering Practice Act". No warranty of any kind is made by TxDOT for any purpose whatsoever. TxDOT assumes no responsibility for the conversion of this standard to other formats or for incorrect results or damages resulting from its use.

DATE:
FILE:

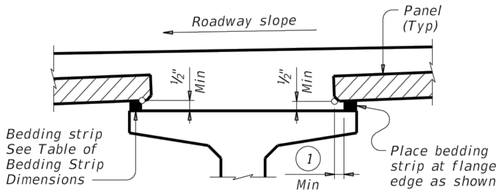


## NORMAL GRADING DETAIL (3)

*Showing prestressed concrete I-girders. (Other beam types similar)*

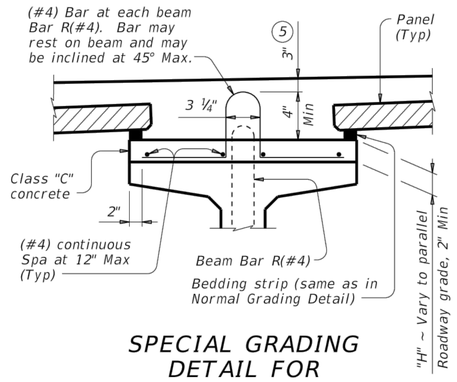


## SPECIAL GRADING DETAIL FOR CONCRETE BEAMS

*Showing prestressed concrete I-girders. (Other beam types similar)*

| TABLE OF BEDDING STRIP DIMENSIONS | | |
|---|---|---|
| WIDTH | HEIGHT (4) | |
| | Min | Max |
| 1" (Min) | ½" | 2" |
| 1 ¼" | ½" | 2 ½" |
| 1 ½" | ½" | 3" |
| 1 ¾" | ½" | 3 ½" |
| 2" | ½" | 4" |
| 2 ¼" | ½" | 4 ½" (2) |
| 2 ½" | ½" | 5" (2) |
| 2 ¾" | ½" | 5 ½" (2) |
| 3" (Max) | ½" | 6" (2) |

(1) 2" Min for I-giders, 1 ½" Min for all other beam types.

(2) Allowed for I-girders, not allowed on other beam types.

(3) To reduce the quantity of cast-in-place concrete, bedding strip thickness may be increased in ¼" increments. Bedding strips must be comprised of one layer. Bond bedding strips to the beams with an adhesive compatible with bedding strips. Bedding strips over 2.5" high may need to be bonded to panels. The same thickness strip must be used under any one panel edge and the maximum change in thickness between adjacent panels is ¼". Alternatively, bedding strips may be cut to grade. Panels may be supported by an alternate method, using a commercial product, if approved by the Engineer of Bridge Design, Bridge Division. If bedding strips exceed 6" high for I-Girders, 4" high for all other beam types, use Special Grading Detail for Concrete Beams or submit an alternate method to the Bridge Division for approval.

(4) Height must not exceed twice the width.

(5) Provide clear cover as indicated unless otherwise shown on Span Details.

(6) See Span Details and Thickened Slab End Details for top slab reinforcement and clear cover. Transverse top slab reinforcement may rest on top of prestressed concrete panels if necessary to maintain clear cover.

(7) Space Bars UP(#4) with Beam Bars R(#4) in all areas where measured haunch exceeds 3 ½" with I-girders, and 3" for all other beam types. Epoxy coating for Bars UP is not required.

(8) Do not locate construction joints on top of a panel.

(9) Butt adjacent bedding strips together with adhesive. Cut v-notches, approx ¼" deep, in the top of the bedding strips at 8' o.c..

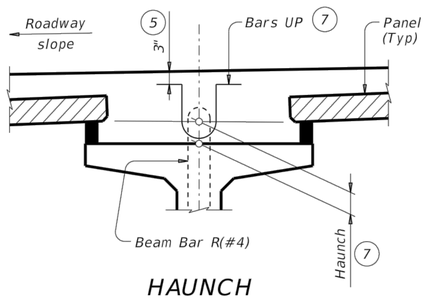


## HAUNCH REINFORCING DETAIL

*Showing prestressed concrete I-girders. (Other beam types similar)*

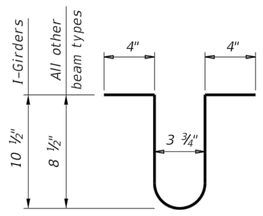


BARS UP (#4) (7)

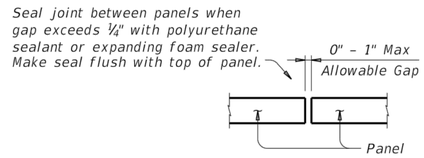


## PANEL JOINTS

*(Panel reinforcing not shown for clarity. The gap cannot be considered as a panel fabrication tolerance. Adjust panel placement to minimize joint openings.)*

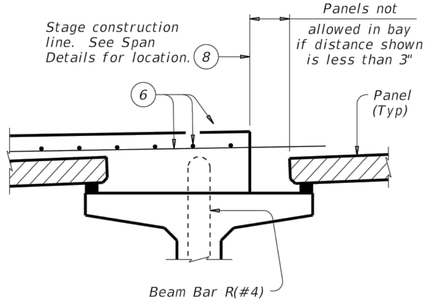


PRESTR CONC I-GIRDERS

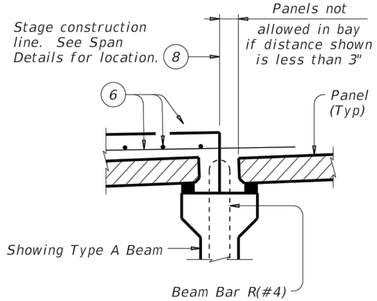


PRESTR CONC I-BEAMS

## STAGE CONSTRUCTION LIMITATIONS

*(Other beam types similar)*

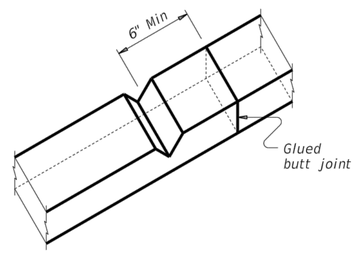


## BEDDING STRIP DETAIL (9)

### CONSTRUCTION NOTES:

Erected panels must bear uniformly on bedding strips of extruded polystyrene placed along top flange edges.

Placing panels to minimize joint openings is recommended.

If additional blocking is needed, special grading details for supporting the panels and extra reinforcing between beam and slab will be considered subsidiary to deck construction.

Bars U, shown on PCP-FAB, may be bent over or cut off if necessary.

Care must be taken to ensure proper cleaning of construction debris and consolidation of concrete material under the edges of the panels. Bedding strips must be placed at beam flange edges so that adequate space is provided for the mortar to flow a minimum of 1 ½" under the panels as the slab concrete is placed.

To allow the proper amount of mortar to flow between beam and panel, the minimum vertical opening must be at least ½". Roadway cross-slope reduces the opening available for entry of the mortar. Bedding strips varying in thickness across the beam are therefore required.

For clear span between U-beams less than or equal to 18", see Permissible Slab Forming Detail on Miscellaneous Slab Detail sheets, UBMS.

### MATERIAL NOTES:

Provide Grade 60 reinforcing steel in the cast-in-place slab. See Table of Reinforcing Steel for size and spacing of reinforcement.

If the top and bottom layer of reinforcing steel is shown on the Span Details to be epoxy coated, then the D, E, P, & Z bars must be epoxy coated.

Provide bar Laps, where required, as follows:

Uncoated ~ #4 = 1'-7"
Epoxy Coated ~ #4 = 2'-5"

### GENERAL NOTES:

Designed according to AASHTO LRFD Bridge Design Specifications.

Panel placement may follow either Option 1 or Option 2 except Option 1 must be used if the skew exceeds 45 degrees.

Use of Prestressed Concrete Panels is not permitted for horizontally curved steel plate or tub girders. See Span Details for other possible restrictions on their use.

These details are to be used in conjunction with the Span Details, PCP-FAB and other applicable standard drawings.

When panel support (bedding strips) deviates from what is shown herein, provide details signed and sealed by a professional Engineer.

Any additional reinforcement or concrete required on this standard is considered subsidiary to the bid Item "Reinforced Concrete Slab".

Cover dimensions are clear dimensions, unless noted otherwise.
Reinforcing bar dimensions shown are out-to-out of bar.

HL93 LOADING



Texas Department of Transportation

Bridge Division Standard

# PRESTRESSED CONCRETE PANELS DECK DETAILS

## PCP

| FILE: pcpstde1-19.dgn | DN: TxDOT | CK: TxDOT | DW: JTR | CK: JMH |
|---|---|---|---|---|
| ©TxDOT April 2019 | CONT | SECT | JOB | HIGHWAY |
| REVISIONS | | | | |
| | DIST | COUNTY | | SHEET NO. |
| | | | | C5.34 |

DISCLAIMER:
The use of this standard is governed by the "Texas Engineering Practice Act". No warranty of any kind is made by TxDOT for any purpose whatsoever. TxDOT assumes no responsibility for the conversion of this standard to other formats or for incorrect results or damages resulting from its use.

DATE:
FILE:

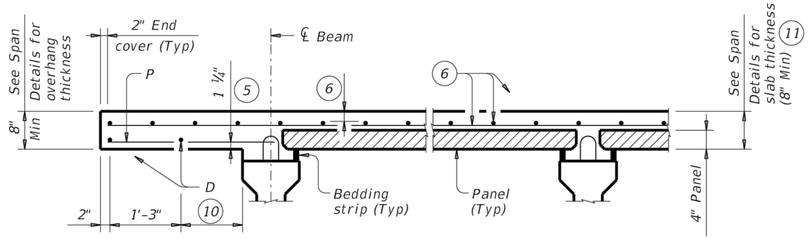


PRESTRESSED CONCRETE I-BEAMS

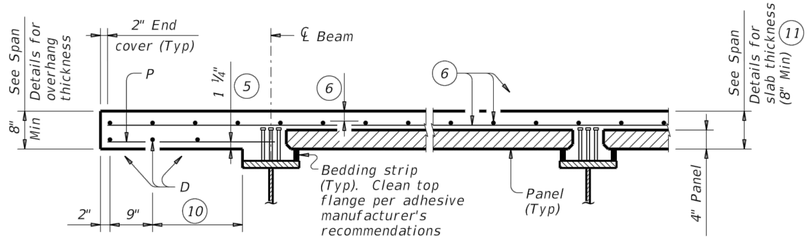


STEEL BEAMS

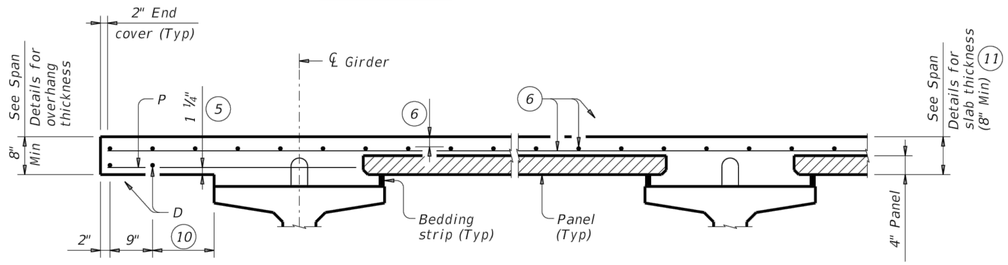


PRESTRESSED CONCRETE I-GIRDERS

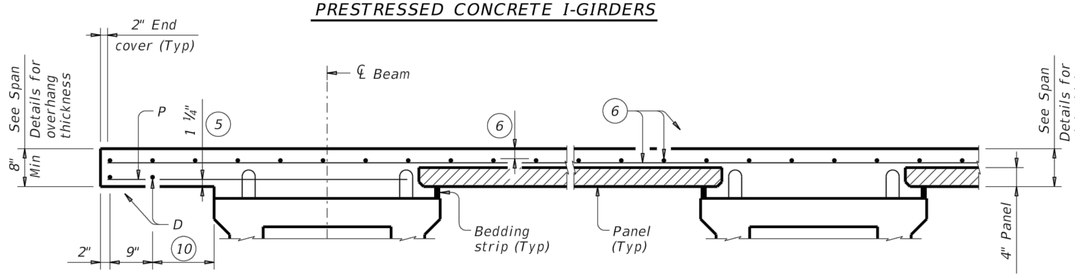


PRESTRESSED CONCRETE X-BEAMS

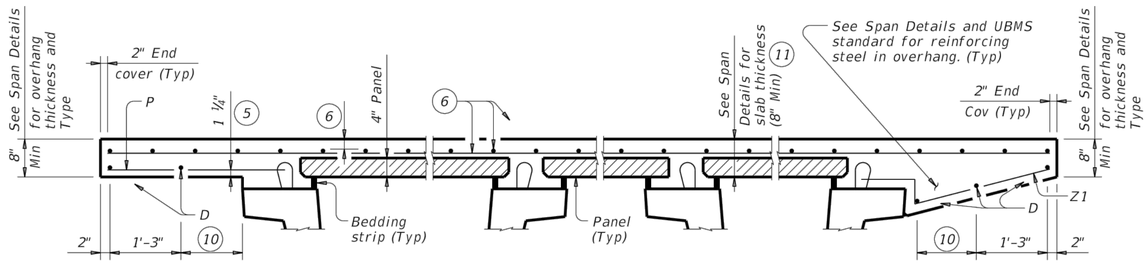


NORMAL OVERHANG WITH PRESTR CONC U-BEAMS

SLOPED OVERHANG WITH PRESTR CONC U-BEAMS

## TYPICAL PART TRANSVERSE SECTIONS

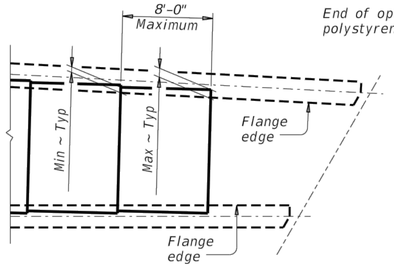


AT FLARED BEAMS OR GIRDERS

See PCP-FAB standard for Min and Max dimensions based on bemm/girder type.

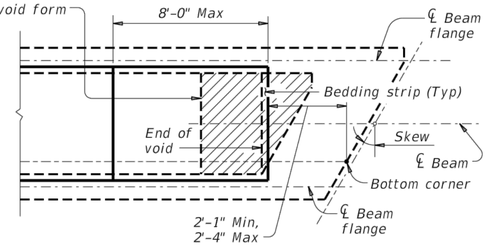


OVER CONC U-BEAMS

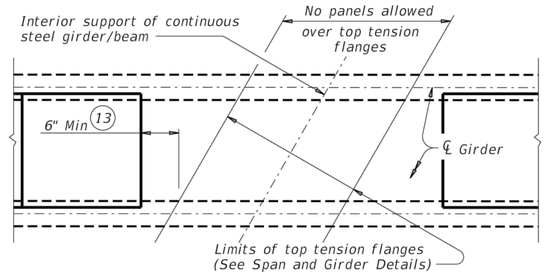


AT INT SUPPORTS OF CONTINUOUS STEEL GIRDERS

## PART PLANS OF PANEL PLACEMENT

(5) Provide clear cover as indicated unless otherwise shown on Span Details.

(6) See Span Details and Thickened Slab End Details for top slab reinforcement and clear cover. Transverse top slab reinforcement may rest on top of prestressed concrete panels if necessary to maintain clear cover.

(9) Butt adjacent bedding strips together with adhesive. Cut v-notches, approx ¼" deep, in the top of the bedding strips at 8' o.c..

(10) Equally space additional bar if more than 1'–3" Max.

(11) The actual thickness constructed may exceed the slab thickness shown on the Span Details but the extra thickness may be no more than 2" (1" for prestressed concrete U-beams and steel beams). Bearing seat elevations or finished grade may be adjusted.

(12) Field adjust Bars Z1(#4) to match actual slope of slab overhangs. Width of slab overhang will vary along span with curved slab edges. Adjust Bar Z1(#4) dimensions to maintain proper cover. Bars Z2(#4) are located at Inverted-Tee stems only.

(13) Location of concrete placement sequence boundaries and bolted field splices should be considered by the contractor in determining panel limits.

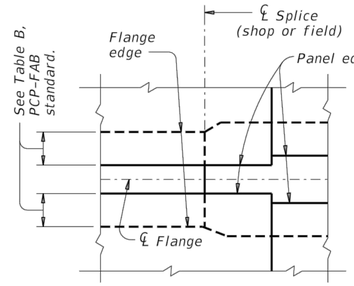


PLAN AT SPLICE

(Showing steel beams with flange width transition)

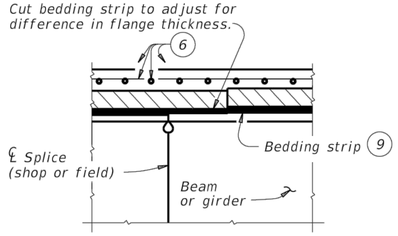


ELEVATION AT SPLICE

(Showing steel beams with different flange thickness)

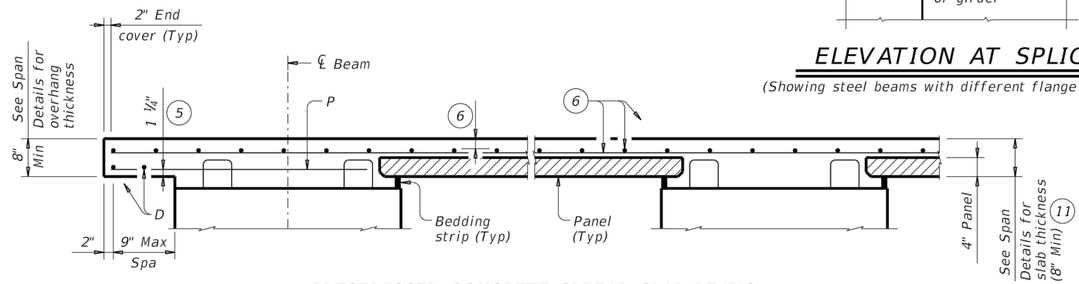


PRESTRESSED CONCRETE SPREAD SLAB BEAMS

Bars P over exterior beams are still required when no overhang is used. In this case, only one Bar D, 2" from slab edge, is required.

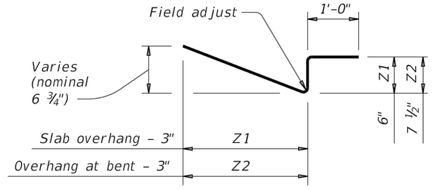


BARS Z (#4) (12)

HL93 LOADING SHEET 2 OF 4

Texas Department of Transportation

Bridge Division Standard

# PRESTRESSED CONCRETE PANELS DECK DETAILS

PCP

| FILE: pcpstde1-19.dgn | DN: TxDOT | CK: TxDOT | DW: JTR | CK: JMH |
|---|---|---|---|---|
| ©TxDOT April 2019 | CONT | SECT | JOB | HIGHWAY |
| REVISIONS | DIST | COUNTY | | SHEET NO. |
| | | | | C5.35 |

DISCLAIMER:
The use of this standard is governed by the "Texas Engineering Practice Act". No warranty of any kind is made by TxDOT for any purpose whatsoever. TxDOT assumes no responsibility for the conversion of this standard to other formats or for incorrect results or damages resulting from its use.

DATE:
FILE:

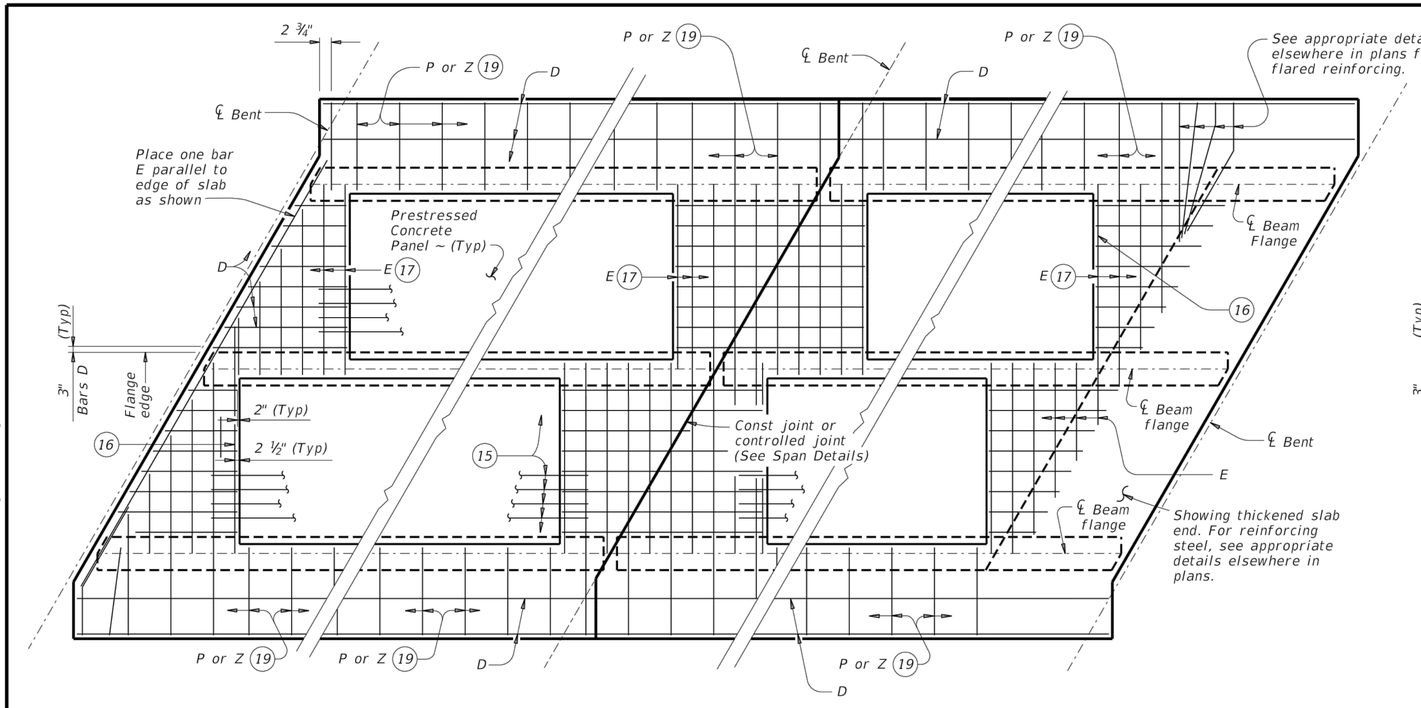


AT ALL SPAN ENDS UNLESS NOTED OTHERWISE | AT INTERIOR BENTS | AT THICKENED END SLABS

## OPTION 1 ~ PLAN OF SLABS WITH NORMAL REINFORCEMENT

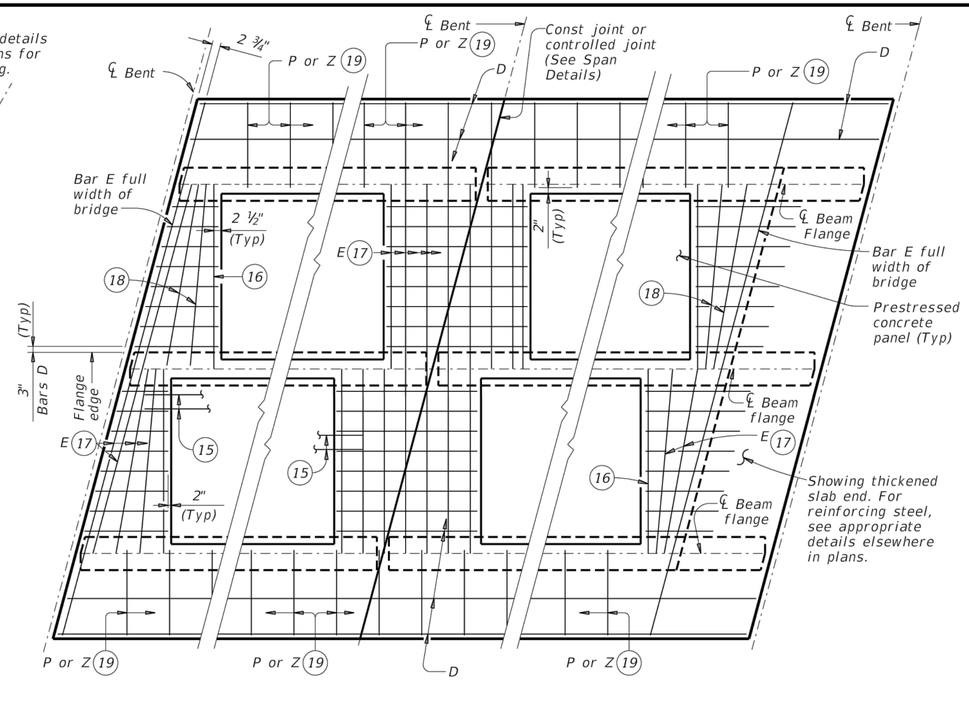


AT ALL SPAN ENDS UNLESS NOTED OTHERWISE | AT INTERIOR BENTS | AT THICKENED END SLABS

## OPTION 1 ~ PLAN OF SLABS WITH SKEWED REINFORCEMENT

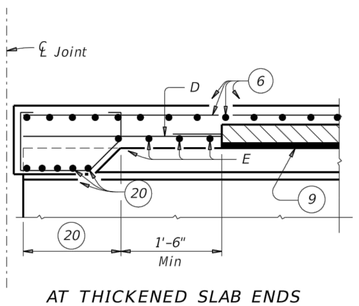


AT THICKENED SLAB ENDS FOR PRESTR CONC U-BMS

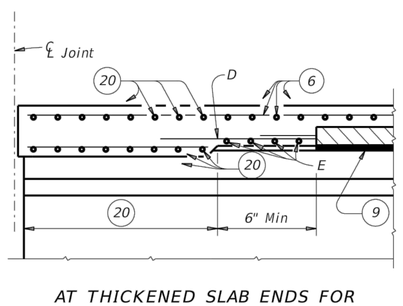


AT THICKENED SLAB ENDS FOR PRESTR CONC I-BMS AND STEEL BMS

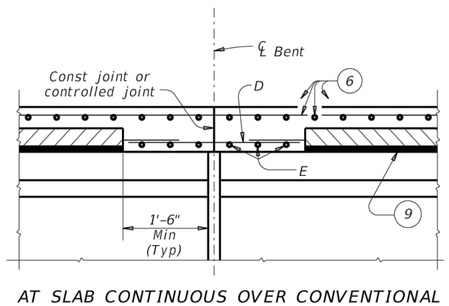


AT SLAB CONTINUOUS OVER CONVENTIONAL INTERIOR BENTS FOR ALL SIMPLE SPAN BMS

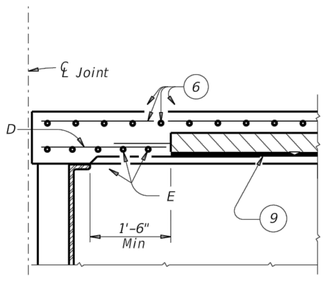


AT CONVENTIONAL END DIAPHRAGMS FOR STEEL BMS

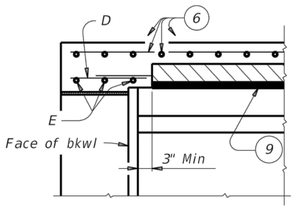


AT SLAB OVER ABUTMENT BACKWALL FOR ALL BMS

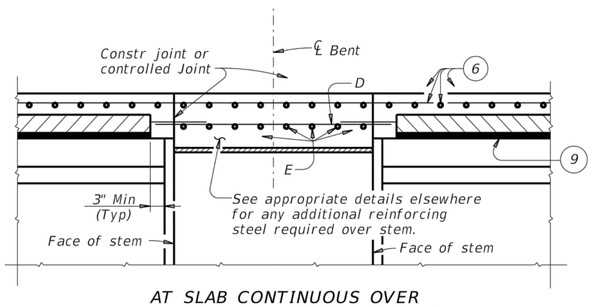


AT SLAB CONTINUOUS OVER INVERTED-T BENTS FOR ALL BMS

## OPTION 1 ~ ELEVATIONS AT BEAM ENDS

(6) See Span Details and Thickened Slab End Details for top slab reinforcement and clear cover. Transverse top slab reinforcement may rest on top of prestressed concrete panels if necessary to maintain clear cover.

(9) Butt adjacent bedding strips together with adhesive. Cut v-notches, approx ¼" deep, in the top of the bedding strips at 8' o.c.

(14) Max Spacing as listed unless otherwise shown.

(15) At connection with cast-in-place slab, extend longitudinal panel reinforcement. See PCP-FAB for details.

(16) Maintain one Bar E(#4) parallel to panel ends (Typ).

(17) Bars E(#4) not continuous over beam flanges must overlap beam flange 6" Min.

(18) Add flared Bars E(#4) (Min Spa = 6", Max Spa = 12") as required at panel ends.

(19) Where possible, Bars E(#4) may be extended into overhangs to replace Bars P(#4). Bars Z(#4) are required for sloped overhangs with U-Beams.

(20) See appropriate thickened slab end details for top reinforcing and limits of thickened slab end.

**TABLE OF REINFORCING STEEL (14)**

| BAR | SIZE | Max Spa (in.) |
|---|---|---|
| D | #4 | 9 |
| E | #4 | 9 |
| P | #4 | 18 |
| UP | #4 | ~ |
| Z | #4 | 18 |
| | | |

HL93 LOADING



Texas Department of Transportation

Bridge Division Standard

# PRESTRESSED CONCRETE PANELS DECK DETAILS

PCP

| FILE: pcpstde1-19.dgn | DN: TxDOT | CK: TxDOT | DW: JTR | CK: JMH |
|---|---|---|---|---|
| ©TxDOT April 2019 | CONT | SECT | JOB | HIGHWAY |
| REVISIONS | DIST | COUNTY | | SHEET NO. |
| | | | | C5.36 |

DISCLAIMER:
The use of this standard is governed by the "Texas Engineering Practice Act". No warranty of any kind is made by TxDOT for any purpose whatsoever. TxDOT assumes no responsibility for the conversion of this standard to other formats or for incorrect results or damages resulting from its use.

DATE:
FILE:

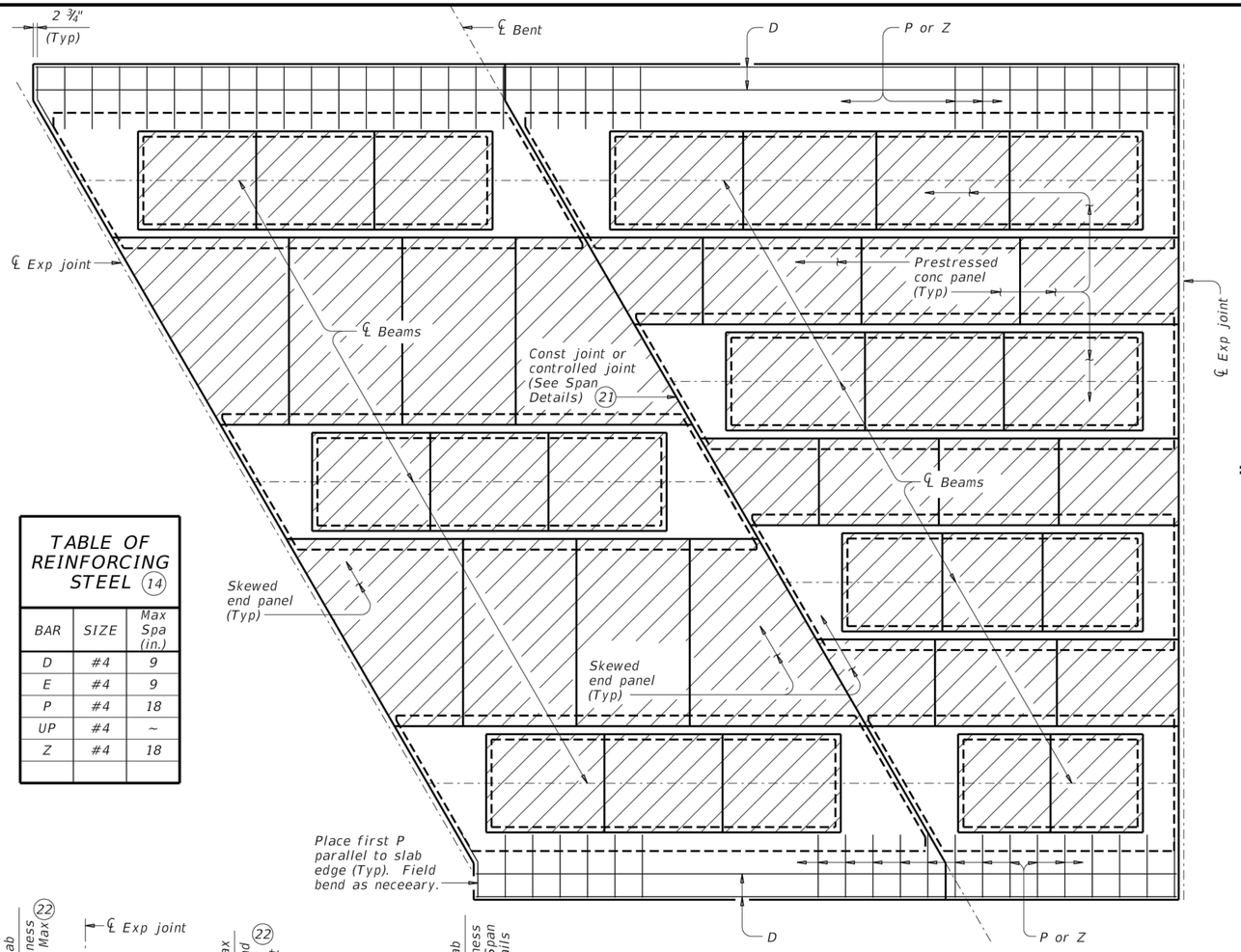


## TABLE OF REINFORCING STEEL (14)

| BAR | SIZE | Max Spa (in.) |
|---|---|---|
| D | #4 | 9 |
| E | #4 | 9 |
| P | #4 | 18 |
| UP | #4 | ~ |
| Z | #4 | 18 |
| | | |

## OPTION 2 ~ PLAN OF SLAB

(Showing U-Beams; other beams similar)

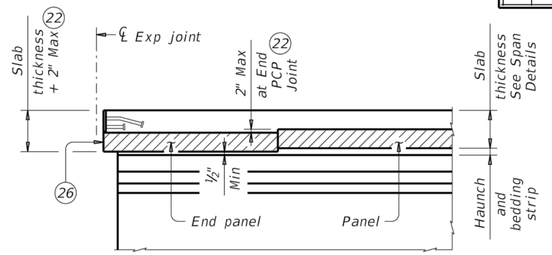


## JOINTS (BETWEEN BEAMS/GIRDERS OR AT INV-T STEM)

For SEJ-A, SEJ-S(0), AJ, and Type A expansion joints only.

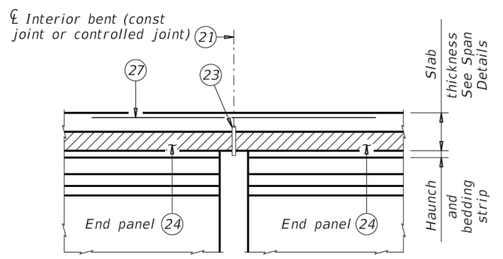


## CONVENTIONAL INTERIOR BENT

Panel against panel between beams/girders.

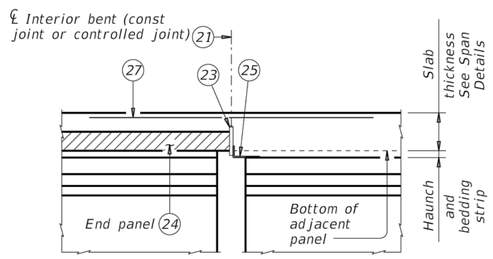


## CONVENTIONAL INTERIOR BENT

Panel against beam/girder end in adacent span.

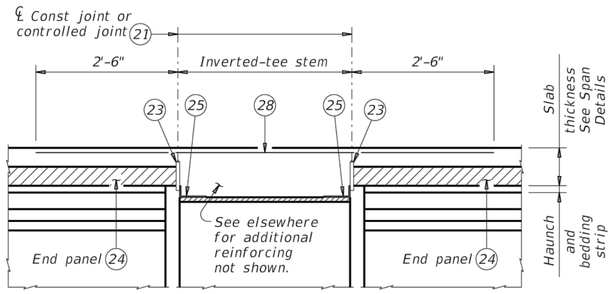


## INVERTED-T BENT

Panels against inverted-tee stem

## OPTION 2 ~ ELEVATIONS AT BEAM ENDS (6)

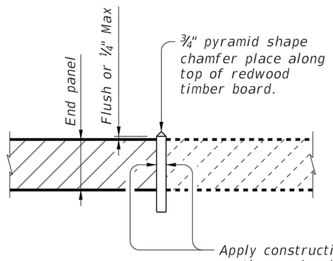


## ELEVATION EXAMPLE OF END PANEL AND TIMBER BOARD (23)

See "Option 2 ~ Elevation At Beam Ends".

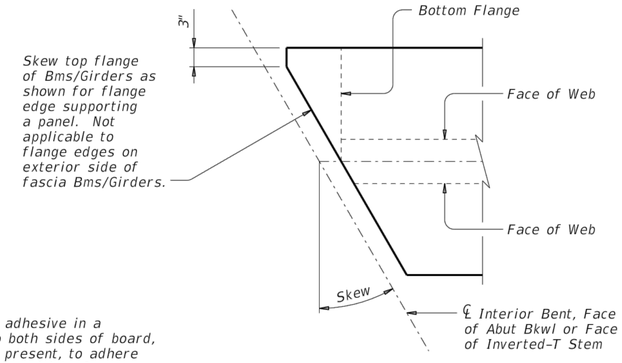


## OPTION 2 ~ SHOWING MODIFICATION TO BEAM/GIRDER TOP FLANGE FOR SKEWS OVER 5°

Showing I-Bm/I-Girder, U-Bms and Steel Bms similar.

(6) See Span Details and Thickened Slab End Details for top slab reinforcement and clear cover. Transverse top slab reinforcement may rest on top of prestressed concrete panels if necessary to maintain clear cover.

(14) Max Spacing as listed unless otherwise shown.

(21) 1 ½" Vinyl or plastic joint former at controlled joints (Stress Cap, Zip Strip, Stress Lock, or equal as approved by the Engineer.)

(22) End panel may be set up to 2" lower to accommodate expansion joint hardware, provided bedding strip is not less than ½" thick.

(23) ¾" thick redwood timber board, leave in place. Redwood timber board placed flush with top of panel or within ¼" Max above panel. Place ¾" pyramid shape chamfer along top of timber board. See "Elevation Example of End Panel and Timber Board". Place straight, within ¼" of centerline of bent or face of inverted-tee, across bridge width and end board at exterior flange edge of fascia beams/girders. Do not extend into overhang.

(24) Place panel within ½" of ¾" thick board.

(25) Permanent galvanized steel sheet form. Removable formwork is acceptable.

(26) Place end panel within ½" of expansion joint opening. End panel cannot encroach on required expansion joint opening.

(27) Place additional (#4) bar 5'-0" in length between every slab bars T. Center (#4) bar on Joint.

(28) Place additional (#4) bar continuous 2'-6" beyond each side of Inverted-T Stem between every slab bars T.

### SPECIAL OPTION 2 CONSTRUCTION NOTES:

When Option 2 is chosen bottom mat of thickened end slab reinforcing is not required. Use the same top mat as shown on the Thickened Slab End Details sheet.

Placing panels adjacent to expansion joints and bent centerlines prior to completing interior panel placement is recommended. Saw cutting panels to fit is acceptable when approved by the Engineer. Minimum distance from a saw cut edge to a panel strand is 1 ½".

Do not extend the longitudinal panel reinforcement into the cast-in-place slab.

Top flanges of beams and girders on skewed bridges must be modified as shown on this drawing. The Contractor is responsible for coordinating this modification with the beam fabricator prior to submitting shop drawings for approval.

Fabricator may optionally skew the whole end. When electing to skew whole end, girder end details and bearing type at conventional interior bent must be changed to use condition at abutment. Fabricator must coordinate change in bearing type, bearing centerline location, and dowel location with Engineer and Contractor. Show appropriate changes on girder and bearing shop drawings.

Bending of anchor studs of expansion joints shown on standards AJ, SEJ-A and SEJ-S(0) is permissible if necessary to clear top of end panels. The Contractor is responsible for coordinating modifications with the joint fabricator. Submit shop drawings for approval when modifications to expansion joint hardware are made.

Bedding strips under skewed end panels must conform to the requirements of Item 422 except their minimum compressive strength must be 60 psi.

Provide Bars AA, G, K and OA from standard IGTS in the slab.

HL93 LOADING SHEET 4 OF 4

Texas Department of Transportation

Bridge Division Standard

# PRESTRESSED CONCRETE PANELS
## DECK DETAILS

# PCP

| FILE: pcpstde1-19.dgn | DN: TxDOT | CK: TxDOT | DW: JTR | CK: JMH |
|---|---|---|---|---|
| ©TxDOT April 2019 | CONT | SECT | JOB | HIGHWAY |
| REVISIONS | | | | |
| | DIST | COUNTY | | SHEET NO. |
| | | | | C5.37 |

DISCLAIMER:
The use of this standard is governed by the "Texas Engineering Practice Act". No warranty of any kind is made by TxDOT for any purpose whatsoever. TxDOT assumes no responsibility for the conversion of this standard to other formats or for incorrect results or damages resulting from its use.

DATE:
FILE:

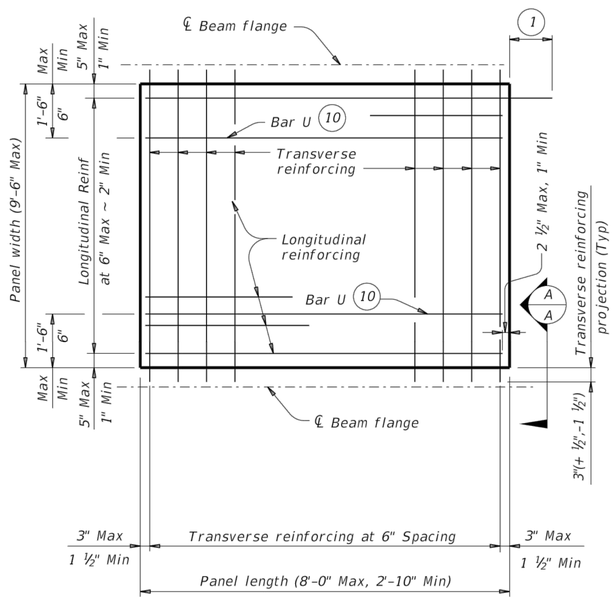


## TYPICAL NON-SKEWED PANEL PLAN

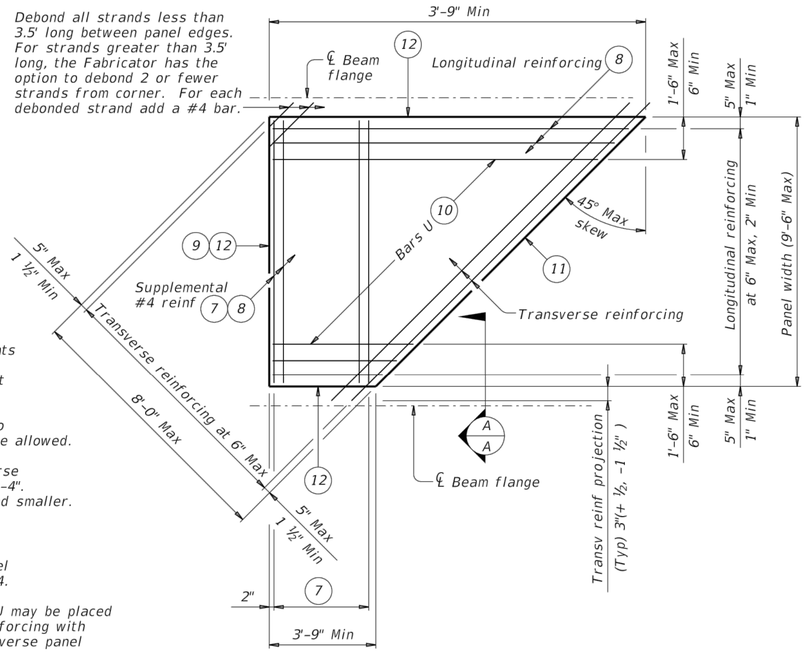


## TYPICAL SKEWED END PANEL PLAN

(Only to be used with details shown elsewhere in the plans.)

1. At connection with cast-in-place slab, extend longitudinal panel reinforcement 1'-0" (+2",-0") past panel end. Alternatively, provide (#3) x 2'-0" dowels at 6" Max Spacing and extend dowels 1'-0" past panel end.
2. Four loops required per panel.
3. Four loops required per panel. ⅜" or ½" strands may be used.
4. Normal dimensions must be used on spans with parallel beams. Maximum and Minimum dimensions apply only to spans with flared beams.
5. See Normal Grading Detail on PCP standard for lap requirements and bedding strip dimensions. Some laps shown in tables cannot utilize all bedding strip widths.
6. One Splice allowed per panel. No more than two sheets of WWR are allowed.
7. Provide (#4) bars under transverse reinforcing, 10 Spaces at 4" = 3'-4". Omit for 5 degree (1:12) skew and smaller.
8. End Cover 2 ½" Max, 1" Min.
9. Recess strands on indicated panel edge in accordance with Item 424.
10. At the fabricator's option, Bars U may be placed parallel to transverse panel reinforcing with horizontal legs in plane of transverse panel reinforcing.
11. Use length of indicated panel edge as panel width for purpose of determining type of transverse reinforcing.
12. Timber form work permissible this edge.

Debond all strands less than 3.5' long between panel edges. For strands greater than 3.5' long, the Fabricator has the option to debond 2 or fewer strands from corner. For each debonded strand add a #4 bar.

| TABLE A (4) (5) | | | |
|---|---|---|---|
| Beam Type | Normal (In.) | Min (In.) | Max (In.) |
| A | 3 | 2 ½ | 3 ½ |
| B | 3 | 2 ½ | 3 ½ |
| C | 4 | 3 | 4 ½ |
| IV | 6 | 4 | 7 ½ |
| VI | 6 ½ | 4 ½" | 8 ½ |
| U40 – 54 | 5 ½ | 5 ½ | 7 |
| Tx28-70 | 6 | 5 | 7 ½ |
| XB20 – 40 | 4 | 3 | 4 ½ |
| XSB12 – 15 | 4 | 3 | 4 ½ |

| TABLE B (4) (5) | | | |
|---|---|---|---|
| Top Flange Width | Normal (In.) | Min (In.) | Max (In.) |
| 11" to 12" | 2 ¾ | 2 ½ | 2 ¾ |
| Over 12" to 15" | 3 ¼ | 3 | 3 ¼ |
| Over 15" to 18" | 4 | 3 | 4 ¾ |
| Over 18" | 5 | 3 ½ | 6 ¼ |

### GENERAL NOTES:

Provide Class H concrete for panels. Release strength f'ci=3,500 psi. Minimum 28 day strength f'c=5,000 psi.

Provide ¾" chamfer along bottom edge of panel on beam side.

Do not use epoxy-coated reinforcing steel bar or strand in panels.

Remove laitance from top panel surface.

Finish top of panel to a roughness between a No. 6 and No. 9 concrete surface profile, inclusive, as specified by the International Concrete Repair Institute (ICRI).

Shop drawings for the fabrication of panels will not require the Engineer's approval if fabrication is in accordance with the details shown on this standard.

A panel layout which identifies location of each panel must be developed by the Fabricator. Permanently mark each panel in accordance with the panel layout. A copy of the layout is to be provided to the Engineer.

### TRANSVERSE PANEL REINFORCEMENT:

For panel widths over 5', use ⅜" or ½" Dia (270k) prestressing strands with a tension of 14.4 kips per strand.

For panel widths over 3'-6" up to and including 5', use ⅜" or ½" Dia (270k) prestressing strands with a tension of 14.4 kip per strand. Optionally, (#4) Grade 60 reinforcing bars may be used in lieu of prestressed strands.

For panel widths up to 3'-6", use (#4) Grade 60 reinforcing bars (prestressed strands alone are not allowed).

Place transverse panel reinforcement at panel centroid and space at 6" Max.

### LONGITUDINAL PANEL REINFORCEMENT:

Any of the following options may be used for longitudinal panel reinforcement:

1. (#3) Grade 60 reinforcing steel at 6" Max Spacing. No splices allowed.
2. ⅜" Dia prestressing strands at 4 ½" Max Spacing (unstressed). No splices allowed.
3. ½" Dia prestressing strands at 6" Max Spacing (unstressed). No splices allowed.
4. Deformed Welded Wire Reinforcement (WWR) (ASTM A1064) providing 0.22 sq in per foot of panel width. Wires larger than D11 not permitted. Provide transverse wires to ensure proper handling of reinforcing. One splice per panel is allowed. See WWR Splice Detail.

No combination of longitudinal reinforcement options in a panel is allowed.

Place longitudinal panel reinforcement above or below transverse panel reinforcement. Must be placed above transverse panel reinforcement for skewed end panels with supplemental (#4) reinforcement.

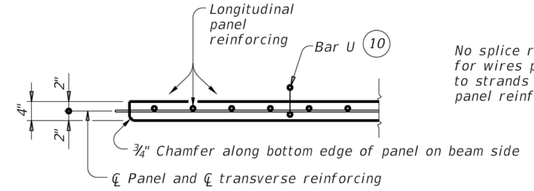


## SECTION A-A

(Not showing supplemental #4 bars for skewed end panels.)

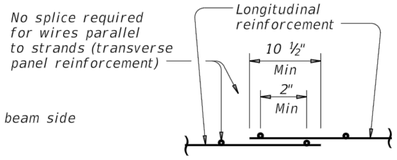


## WELDED WIRE REINFORCEMENT (WWR) SPLICE DETAIL (6)

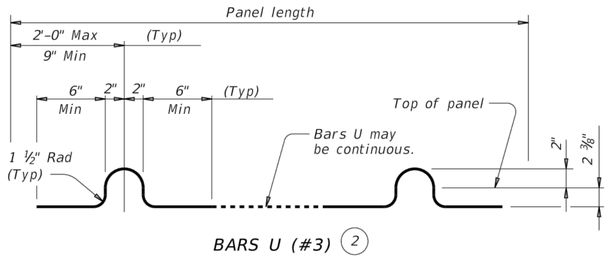


BARS U (#3) (2)

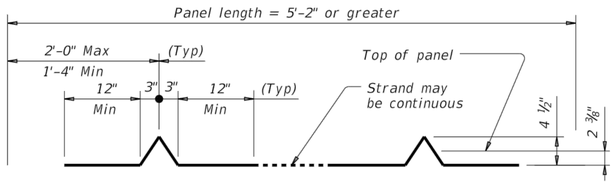


OPTIONAL STRAND FOR BARS U (3)

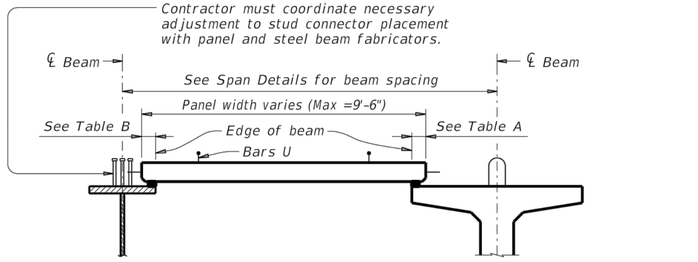


STEEL BEAMS

PRESTRESSED CONCRETE BEAMS OR GIRDERS

Typ unless noted otherwise

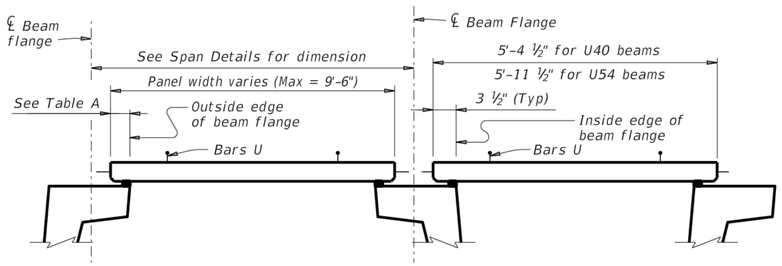


PRESTRESSED CONCRETE U-BEAMS

## TYPICAL SECTIONS FOR DETERMINING PANEL WIDTH

HL93 LOADING

Texas Department of Transportation

Bridge Division Standard

# PRESTRESSED CONCRETE PANEL FABRICATION DETAILS

## PCP-FAB

| FILE: pcpstde2-19.dgn | DN: TxDOT | CK: TxDOT | DW: JTR | CK: AES |
|---|---|---|---|---|
| ©TxDOT April 2019 | CONT | SECT | JOB | HIGHWAY |
| REVISIONS | | | | |
| | DIST | COUNTY | | SHEET NO. |
| | | | | C5.38 |

DISCLAIMER:
The use of this standard is governed by the "Texas Engineering Practice Act". No warranty of any kind is made by TxDOT for any purpose whatsoever. TxDOT assumes no responsibility for the conversion of this standard to other formats or for incorrect results or damages resulting from its use.

DATE:
FILE:

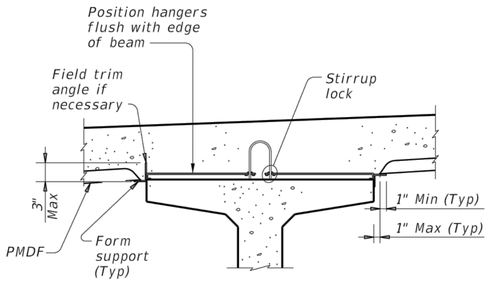


PRESTR CONC I-BEAMS AND I-GIRDERS WITH STIRRUP LOCKS

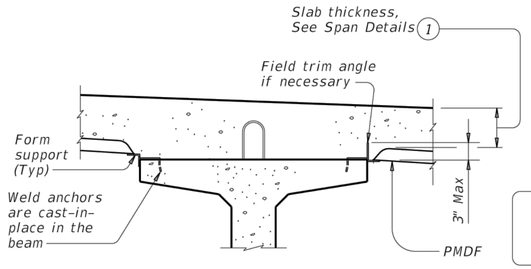


PRESTR CONC I-BEAMS AND I-GIRDERS WITH WELD ANCHORS

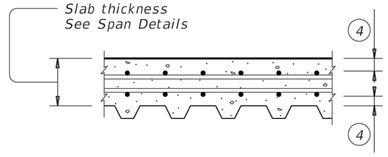


TYP LONGITUDINAL SLAB SECTION

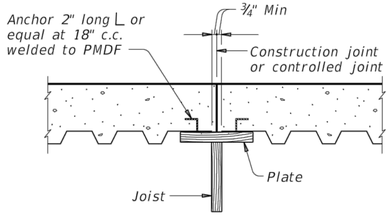


Note: In spans where PMD forms are used, timber forms must be used at construction joints.
Adequate provision must be made to support edge of metal form and to provide anchorage of metal form to slab concrete where joined to wood forms.

SECTION THRU CONSTRUCTION JOINT

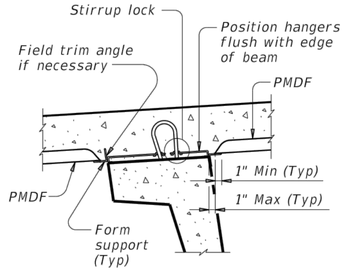


U-BEAMS WITH STIRRUP LOCKS

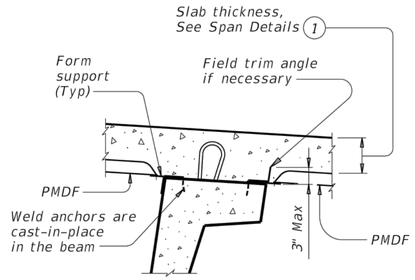


U-BEAMS WITH WELD ANCHORS

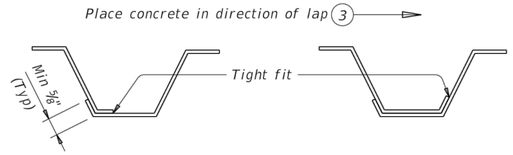


SIDE LAP DETAILS

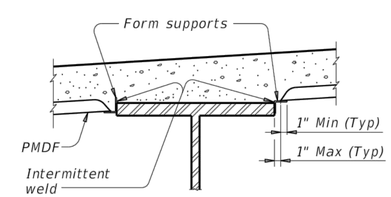


STEEL BEAMS AT COMPRESSION FLANGES

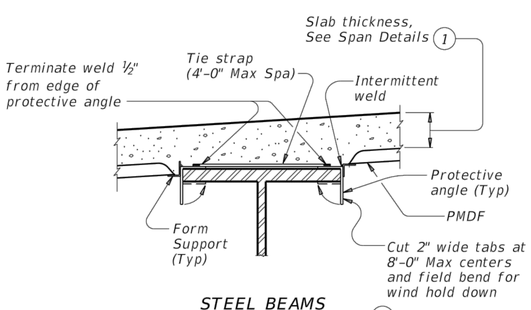


STEEL BEAMS AT TENSION FLANGES (2)

TYPICAL TRANSVERSE SECTIONS

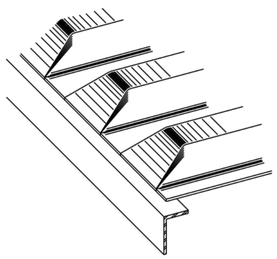

PRECLOSED

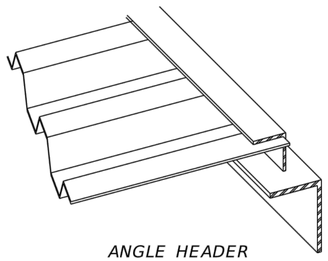

ANGLE HEADER

NOTE: This type is to be used for skewed ends only.

TYPES OF END CLOSURES

(1) Slab thickness minus ⅝" if corrugations match reinforcing bars.

(2) Welding of form supports to tension flanges will not be permitted. Other methods of providing wind hold down resistance for PMDF in tension flange zones will be considered. At least one layer of sheet metal must be provided between the flange and the weld joint.

(3) The direction of concrete placement will be such that the upper layer of the form overlap is loaded first.

(4) See Span details for cover requirements.

GENERAL NOTES:
Steel for Permanent Metal Deck Forms (PMDF) and support angles shall conform to ASTM A653, structural steel (SS), with coating designation G165. Steel must have a minimum yield strength of 33 ksi. Minimum thickness of PMDF is 20 gage and that of support angles and protective angles is 12 gage.
Submit two copies of forming plans for PMDF to the Engineer. These plans must show all essential details of proposed form sheets, closures, fasteners, supports, connectors, special conditions and size and location of welds. These plans must clearly show areas of tension flanges for steel beams and provisions for protecting the tension flanges from welding notch effects by inclusion of separating sheet metal or other positive method. These plans must be designed, signed, and sealed by a licensed professional engineer. Department approval of these plans is not required, but the Department reserves the right to require modifications to the plans. The Contractor is responsible for the adequacy of these plans.
The details and notes shown on this standard are to be used as a guide in preparation of the forming plans.
All material, labor, tools and incidentals necessary to form a bridge deck with Permanent Metal Deck Forms is considered subsidiary to Item 422, "Concrete Superstructures".

DESIGN NOTES:
As a minimum, PMDF and support angles must be designed for the dead load of the form, reinforcement and concrete plus 50 psf for construction loads. Flexural stresses due to these design loads must not exceed 75 percent of the yield strength of the steel. Allowable stress for weld metal must be 12,400 psi.
Maximum deflection under the weight of forms, reinforcement and concrete or 120 psf, whichever is greater, shall not exceed the following:

1/180 of the form design span, but not more than 0.50", for design spans of 10' or less.

1/240 of the form design span, but not more than 0.75", for design spans greater than 10'.

The form design span must not be less than the clear distance between beam flanges, measured parallel to the form flutes, minus 2".

CONSTRUCTION NOTES:
Form sheets must not be permitted to rest directly on the top of beam flanges. Form sheets must be securely fastened to form supports and must have a minimum bearing length of one inch at each end. Form supports must be placed in direct contact with beam flanges.
All attachments must be made by permissible welds, screws, bolts, clips or other means shown on the the forming plans. All sheet metal assembly screws must be installed with torque–limiting devices to prevent stripping. Only welds or bolts must be used to support vertical loads.
Welding and welds must be in accordance with the provisions of Item 448, "Structural Field Welding", pertaining to fillet welds. All welds must be made by a qualified welder in accordance with Item 448.
All permanently exposed form metal, where the galvanized coating has been damaged, must be thoroughly cleaned and repaired in accordance with Item 445, "Galvanizing". Minor heat discoloration in areas of welds need not be touched up.
Flutes must line up uniformly across the entire width of the structure where main reinforcing steel is located in the flute.
Construction joints will not be permitted unless shown on the plans. The location of and forming details for any construction joint used must be shown on the forming plans. Forms below a construction joint must be removed after curing of the slab.
A sequence for uniform vibration of concrete must be approved by the Engineer prior to concrete placement. Attention must be given to prevent damage to the forms, yet provide proper vibration to prevent voids or honeycomb in the flutes and at headers and/or construction joints.

FOR PRESTR CONC U-BEAM BRIDGES:
Size, spacing, and orientation of bottom mat of slab reinforcement must match the top mat of reinforcing shown on the span details except all bottom mat bars are to be #5.

FOR PRESTR CONC TX-GIRDER BRIDGES:
See Miscellaneous Slab Details, Prestr Concrete I–Girders (IGMS) standard sheet for bottom mat reinforcing.

SHEET 1 OF 2

Texas Department of Transportation

Bridge Division Standard

# PERMANENT METAL DECK FORMS

## PMDF

| FILE: pmdfste1-19.dgn | DN: TxDOT | CK: TxDOT | DW: TxDOT | CK: TxDOT |
|---|---|---|---|---|
| ©TxDOT April 2019 | CONT | SECT | JOB | HIGHWAY |
| REVISIONS | | | | |
| | DIST | COUNTY | | SHEET NO. |
| | | | | C5.39 |

DISCLAIMER:
The use of this standard is governed by the "Texas Engineering Practice Act". No warranty of any kind is made by TxDOT for any purpose whatsoever. TxDOT assumes no responsibility for the conversion of this standard to other formats or for incorrect results or damages resulting from its use.

DATE:
FILE:

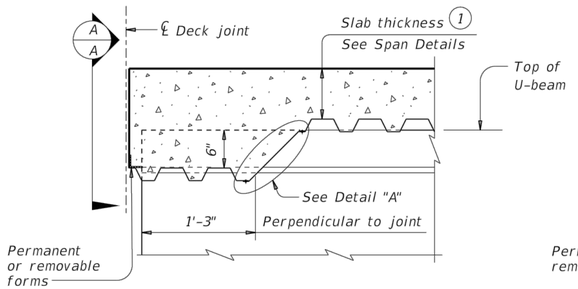


AT THICKENED SLAB END FOR U-BEAMS

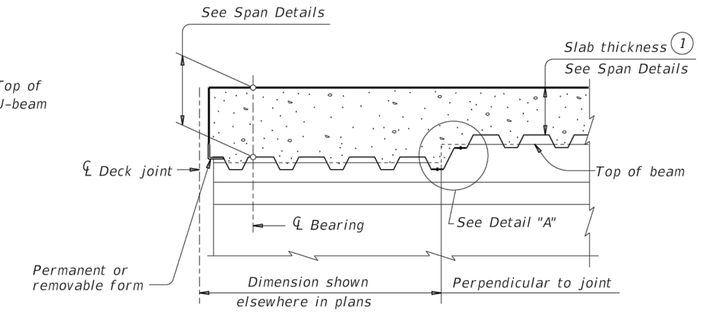


AT THICKENED SLAB END FOR PRESTRESSED I-BEAMS, I-GIRDERS AND STEEL BEAMS

*Showing I-beam block-out. No block-out for I-girders or steel beams.*

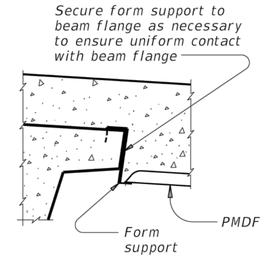


SECTION A-A

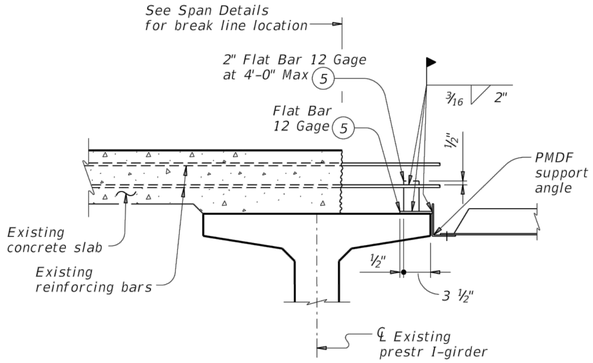


SHOWING PRESTRESSED CONCRETE I-BEAMS, I-GIRDERS AND U-BEAMS

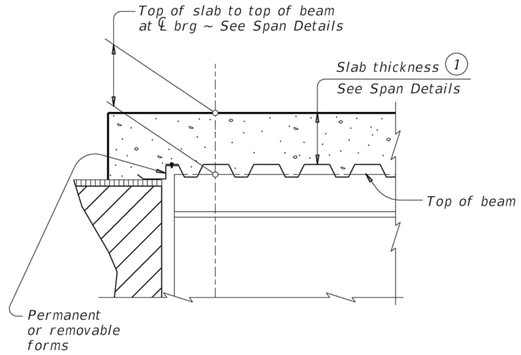


AT SLAB OVER ABUT BKWL OR INV TEE STEM FOR CONC BEAMS WITHOUT THICKENED SLAB END

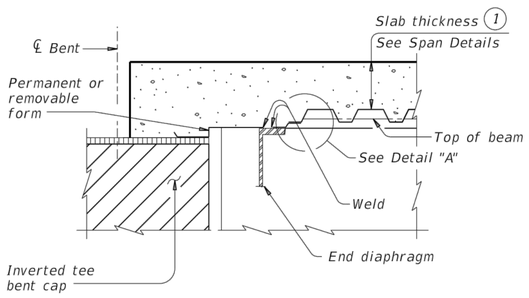


AT SLAB OVER INV TEE STEM FOR STEEL BEAMS WITHOUT THICKENED SLAB END

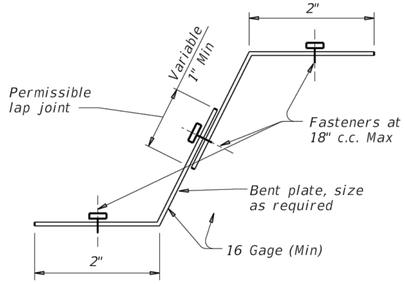


DETAIL "A"

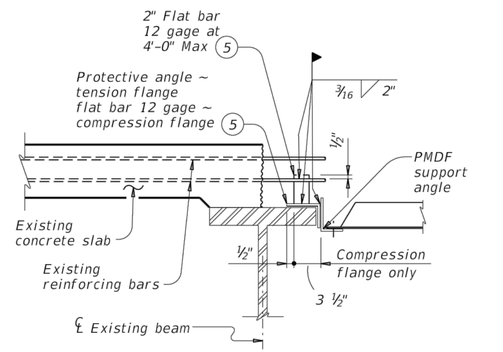


SHOWING STEEL BEAMS

WIDENING DETAILS

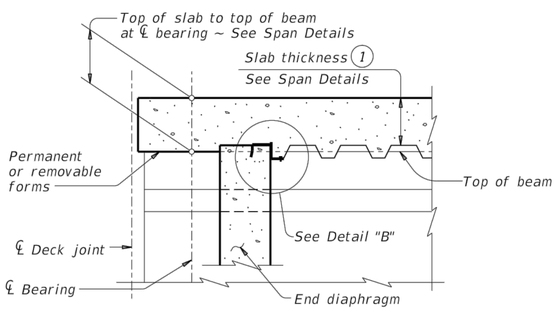


AT CONC END DIAPHRAGM FOR PRESTRESSED I-BEAMS AND STEEL BEAMS

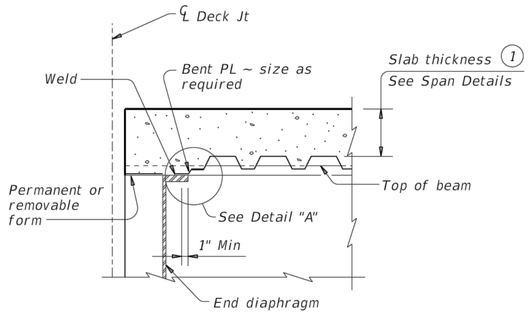


AT END DIAPHRAGM FOR STEEL BEAMS WITHOUT THICKENED SLAB END

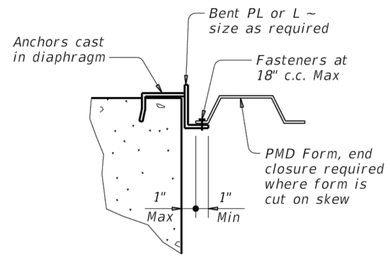


DETAIL "B"

(1) Slab thickness minus 5/8" if corrugations match reinforcing bars

(5) Minimum yield stress of 12 gage bars shall be 40 ksi

DETAILS AT ENDS OF BEAMS

SHEET 2 OF 2

Texas Department of Transportation

Bridge Division Standard

# PERMANENT METAL DECK FORMS

## PMDF

| FILE: pmdfste1-19.dgn | DN: TxDOT | CK: TxDOT | DW: TxDOT | CK: TxDOT |
|---|---|---|---|---|
| ©TxDOT April 2019 | CONT | SECT | JOB | HIGHWAY |
| REVISIONS | DIST | COUNTY | | SHEET NO. |
| | | | | C5.40 |

DISCLAIMER:
The use of this standard is governed by the "Texas Engineering Practice Act". No warranty of any kind is made by TxDOT for any purpose whatsoever. TxDOT assumes no responsibility for the conversion of this standard to other formats or for incorrect results or damages resulting from its use.

DATE:
FILE:

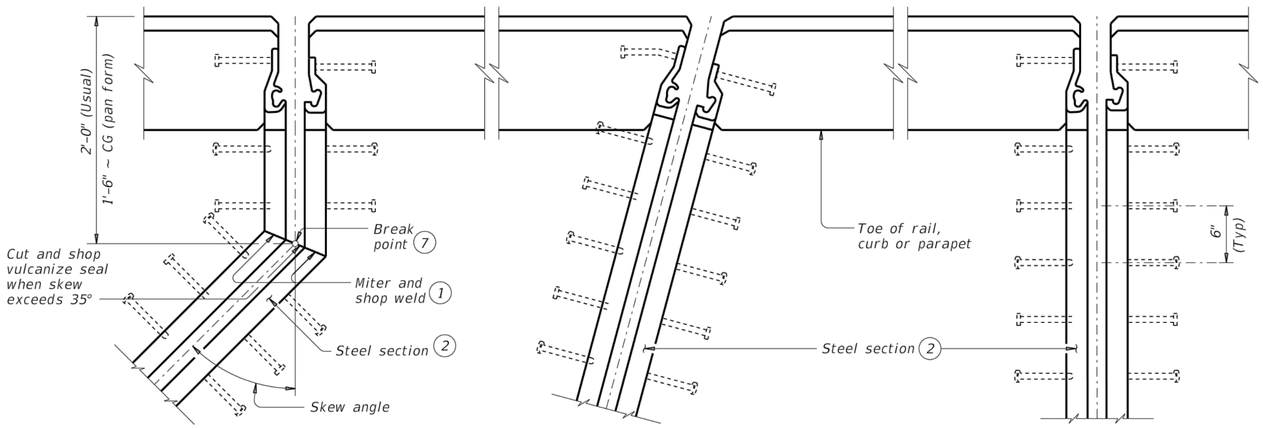


SHOWING SKEWS WITH SLAB BREAKBACKS | SHOWING SKEWS WITHOUT SLAB BREAKBACKS | SHOWING WITHOUT SKEWS AND SLAB BREAKBACKS

## PLANS OF END CONDITIONS

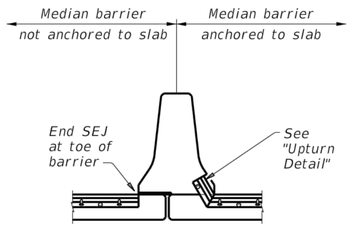


WITH OPEN DECK JOINT BELOW MEDIAN BARRIER

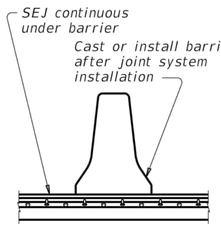


AT MEDIAN BARRIER

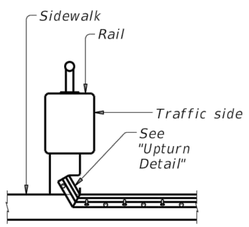


AT SIDEWALK BEHIND BRIDGE RAIL

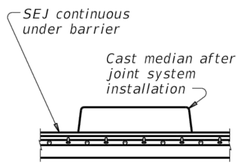


AT RAISED MEDIAN

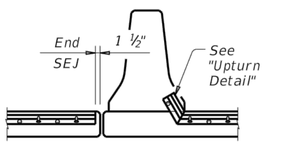


WITH OPEN DECK JOINT ADJACENT TO MEDIAN BARRIER

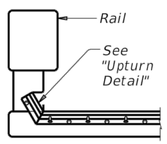


AT CONCRETE BRIDGE RAIL

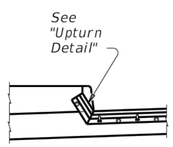


AT SIDEWALK

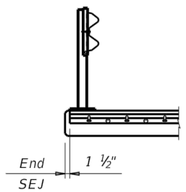


AT STEEL POST BRIDGE RAIL

## TYPICAL SECTIONS (5)

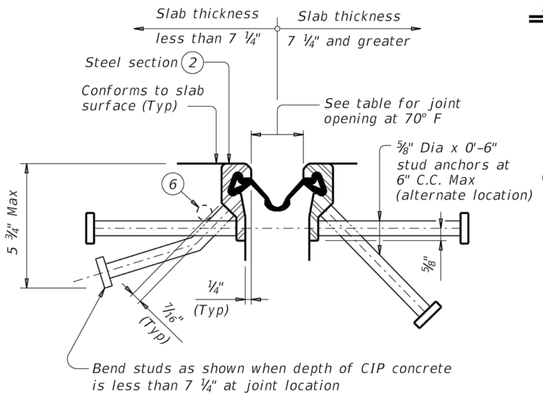


SECTION THRU WATSON BOWMAN ACME (SE-400 OR SE-500) JOINTS

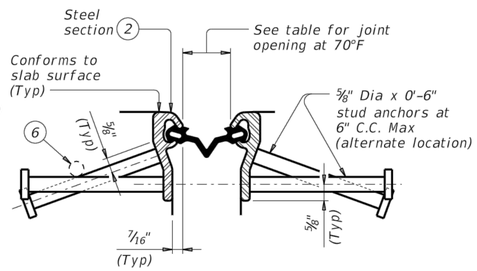


SECTION THRU D.S. BROWN (A2R-400 OR A2R-XTRA) JOINTS

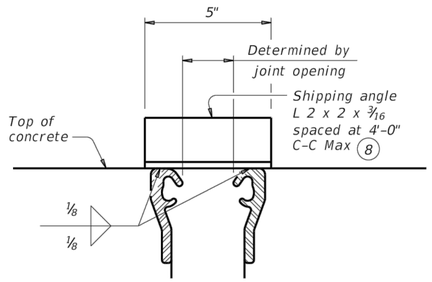


SHOWING D.S. BROWN (Ty SSCM2)
(All joints are similar.) (Studs are not shown for clarity.)

## SHIPPING ANGLE

An alternate method of securing joint sections may be used if approved by the Bridge Division. Erection bolts are not allowed.

## TABLE OF SEALED EXPANSION JOINT INFORMATION

| MANUFACTURER | STEEL SECTION (2) | STRIP SEAL | | | |
|---|---|---|---|---|---|
| | | 4" JOINT | | 5" JOINT | |
| | | Seal Type | Joint Opening (3) | Seal Type | Joint Opening (3) |
| D.S. Brown | Type SSCM2 | A2R-400 | 1 ¾" | A2R-XTRA | 2" |
| Watson Bowman Acme | Type R | SE-400 | 1 ¾" | SE-500 | 2" |

### REDUCED LONGITUDINAL MOVEMENT RANGE

| SKEW (deg) | JOINT SIZE | |
|---|---|---|
| | 4" | 5" |
| 0 | 4.0" | 5.0" |
| 15 | 4.0" | 5.0" |
| 30 | 3.5" | 4.3" |
| 45 | 2.8" | 3.5" |

### DESIGN NOTES:

Joints installed on a skew have reduced ability to accommodate longitudinal movement. Use table values to determine the correct joint size for skewed installations.

For other skews over 25 degrees, calculate reduced movement range by multiplying joint size by cosine (skew).

(1) Remove all burrs which will be in contact with seal prior to making splice.

(2) Shape of steel section shown is typical. Variations in sections must be approved by the Engineer.

(3) These openings are also the recommended minimum installation openings.

(4) Reduce for sidewalk or parapet heights less than 6".

(5) Other conditions affecting the joint profile should be noted elsewhere.

(6) Move transverse bars that are in conflict with SEJ studs, in either the bridge slab or approach slab, to rest at the junction of the studs.

(7) See Span details for location of break point.

(8) Align shipping angle perpendicular to joint.

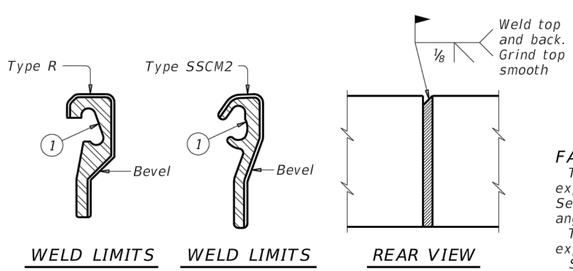


WELD LIMITS | WELD LIMITS | REAR VIEW

## FIELD SPLICE DETAIL

### FABRICATION NOTES:

Temporarily shop assemble corresponding sections of sealed expansion joints (SEJ), check for fit, and match mark for shipment. Secure corresponding sections together for shipment with shipping angle. Do not use erection bolts.

The seal must be continuous and included in the price bid for sealed expansion joint.

Ship steel sections in convenient lengths of 10'-0" Min and 24'-0" Max unless necessary for staged construction or widenings. One shop splice is permitted in each shipping length provided no piece is less than 2'-0" long and sufficient studs are added to limit the stud to shop splice distance to 2" Min and 4" Max.

Weld studs in accordance with AWS D1.1.

Butt weld all shop and field splices and grind smooth areas in contact with seal. Make all necessary field splice joint preparations in the shop.

Paint the entire steel section with System II or IV primer in accordance with Item 446, "Feild Cleaning and Painting Steel", unless required to galvanize when shown in the plans. Provide galvanizing in accordance with Item 445, "Galvanizing". Provide paints in accordance with Item 446.2. Prepare steel and apply paint in accordance with Item 446.4.7.3 and 446.4.7.4.

Shop drawings for the fabrication of sealed expansion joints will not require the Engineer's approval if fabrication is in accordance with the details shown on this standard.

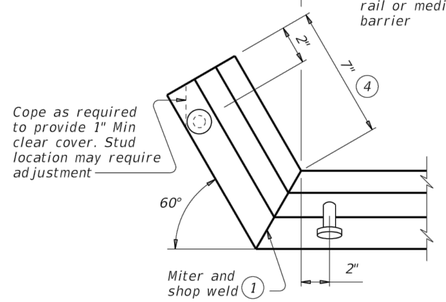


UPTURN DETAIL

### CONSTRUCTION NOTES:

Secure the sealed expansion joint in position and place to the proper grade and alignment by welding braces to adjacent reinforcing steel, to prestressed beam stirrups, or to anchors cast in concrete diaphragms. Include cost of temporary bracing in the price bid for sealed expansion joint.

Remove shipping angle immediately after each joint half is secured in place. Grind smooth, and touch up with organic zinc-rich paint.

Clean and prepare seal cavity for seal installation as per the Manufacturer's installation procedures.

### GENERAL NOTES:

Provide sealed expansion joints in the size and at locations shown on the plans.

Minimum slab and overhang thickness required for the use of SEJ-M is 6 ½".

Texas Department of Transportation

Bridge Division Standard

# SEALED EXPANSION JOINT TYPE M WITHOUT OVERLAY

## SEJ-M

| FILE: sejmste1-19.dgn | DN: TxDOT | CK: TxDOT | DW: JTR | CK: JMH |
|---|---|---|---|---|
| ©TxDOT April 2019 REVISIONS | CONT | SECT | JOB | HIGHWAY |
| | DIST | COUNTY | | SHEET NO. |
| | | | | C5.41 |

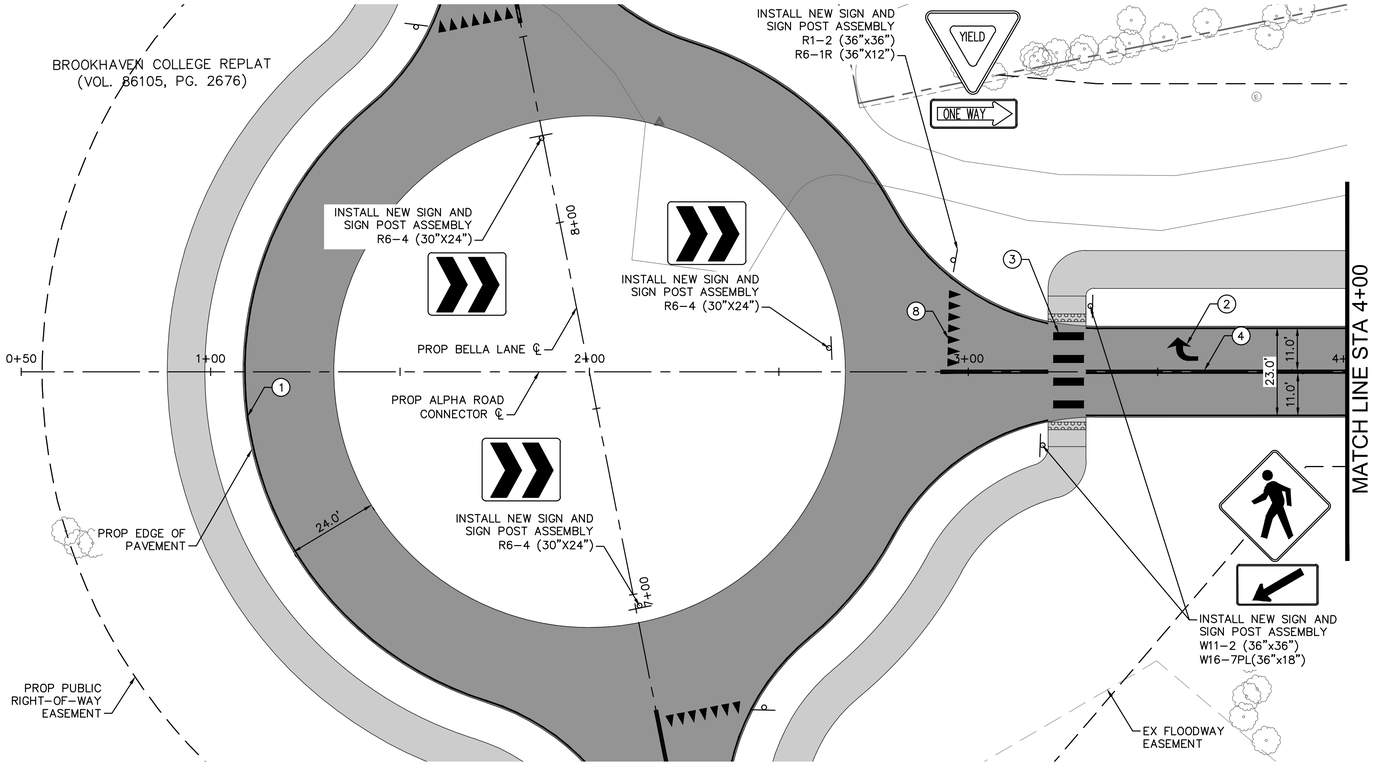


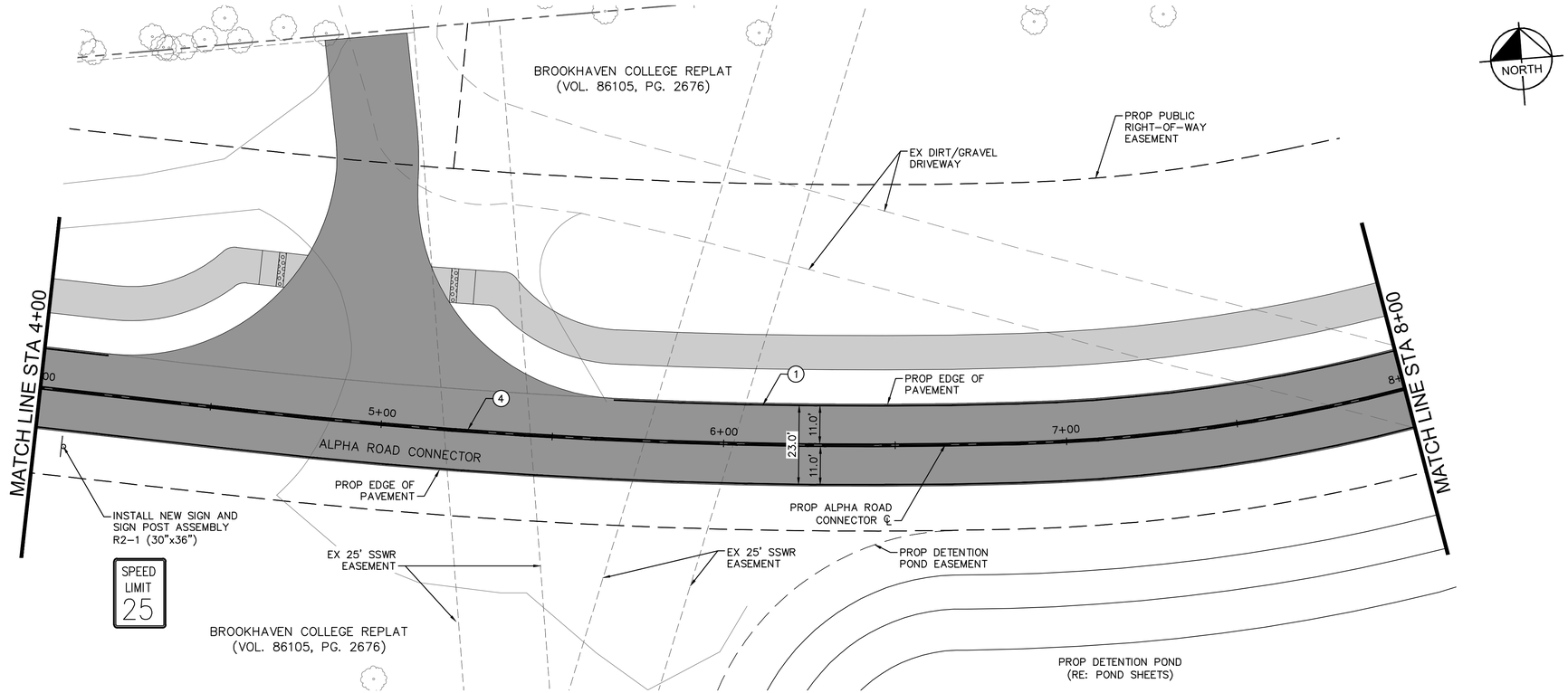


GRAPHIC SCALE IN FEET
0 10 20 40

## STRIPING LEGEND

| | |
|---|---|
| 1 | INSTALL 4" WHITE EDGE LINE |
| 2 | INSTALL ARROW (W) |
| 3 | INSTALL 24" X 8' WHITE LINE WITH 4' SPACE (CROSSWALK) |
| 4 | INSTALL 4" DOUBLE YELLOW LINE |
| 5 | INSTALL BROKEN 4" YELLOW LINE |
| 6 | INSTALL 24" STOP BAR MARKING |
| 7 | INSTALL 5' X 17' WHITE LINE WITH 5' SPACE (CROSSWALK) |
| 8 | INSTALL YIELD LINES TY I (W) 24" (TRI) (100MIL) |

## NOTES

1. CONTRACTOR IS RESPONSIBLE FOR RELOCATION OF ANY SIGNS AND COORDINATION WITH THE CITY ON ANY NECESSARY MODIFICATIONS.
2. CONTRACTOR IS RESPONSIBLE FOR LOCATING ALL IRRIGATION FACILITIES WITHIN LOC.
3. ALL PAVEMENT MARKINGS SHALL BE 100 MIL THERMOPLASTIC UNLESS OTHERWISE NOTED

811 Know what's below. Call before you dig.

| No. | REVISIONS | DATE | BY |
|---|---|---|---|

PROJECT NO. 2021-01C/ BID NO. 21-69


Kimley»Horn
2201 WEST ROYAL LANE, SUITE 275, IRVING, TX 75063
PHONE: 214-420-5600
WWW.KIMLEY-HORN.COM


© 2021 KIMLEY-HORN AND ASSOCIATES, INC.
TEXAS REGISTERED ENGINEERING FIRM #F-928


9/10/2021

STATE OF TEXAS
RYAN DELMOTTE
114242
LICENSED
PROFESSIONAL ENGINEER

KHA PROJECT 063543031
DATE 09/10/2021
SCALE AS SHOWN
DESIGNED BY RMD
DRAWN BY CDS
CHECKED BY LNA

# TOWN OF ADDISON
ALPHA ROAD CONN.
FROM FARMERS BRANCH
CREEK TO ALPHA ROAD

# PAVEMENT MARKING AND SIGNING
ALPHA ROAD CONNECTOR
BEGIN TO STA 8+00

SHEET NUMBER
C6.01


Plotted By:Shadbolt, Cody September 08, 2021 09:14:40am K:\LAC_Civil\063543031_Addison_Alpha_Road_Connector\CADD\PlanSheets\Pavement Markings.dwg
This document, together with the concepts and designs presented herein, as an instrument of service, is intended only for the specific purpose and client for which it was prepared. Reuse of and improper reliance on this document without written authorization and adaptation by Kimley-Horn and Associates, Inc. shall be without liability to Kimley-Horn and Associates, Inc.

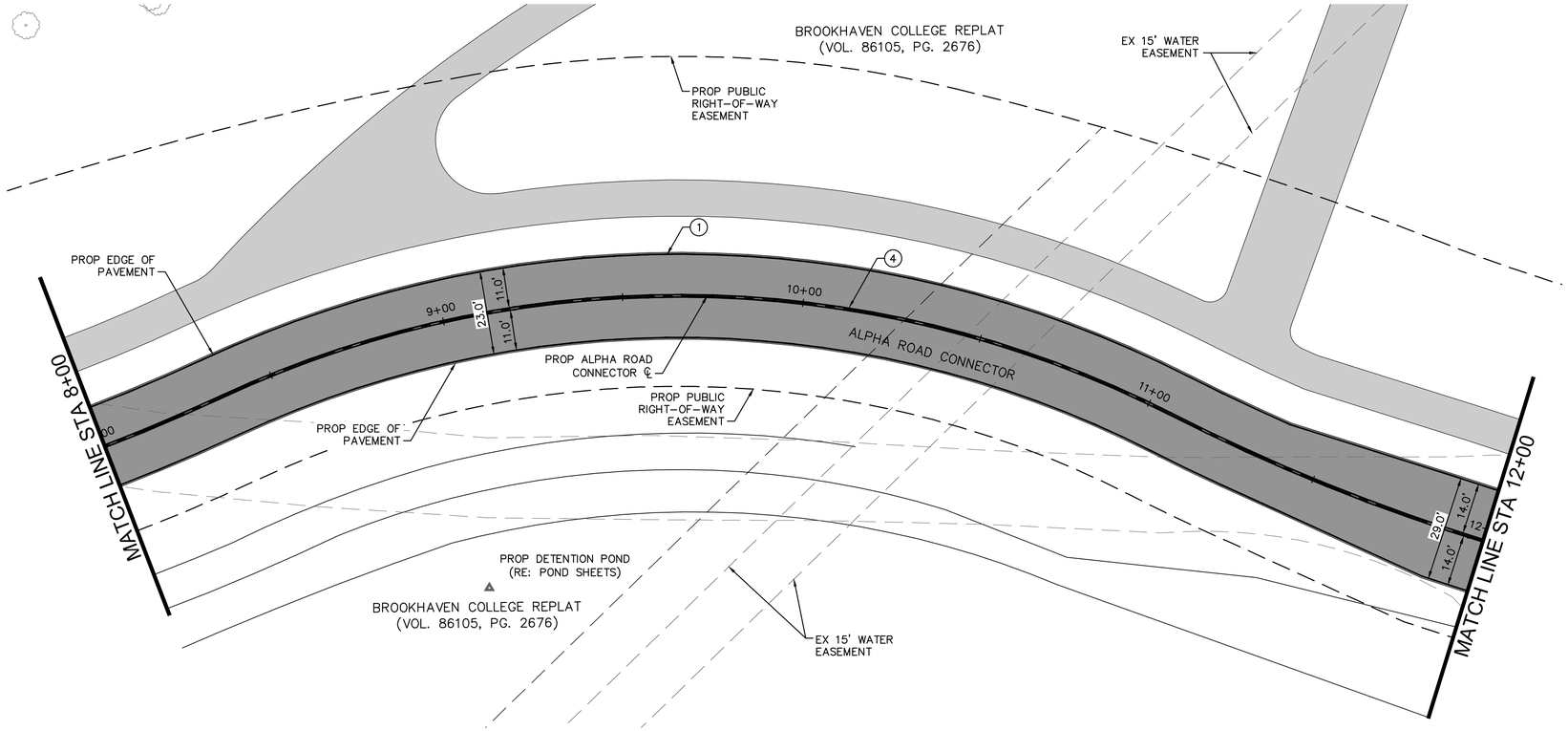


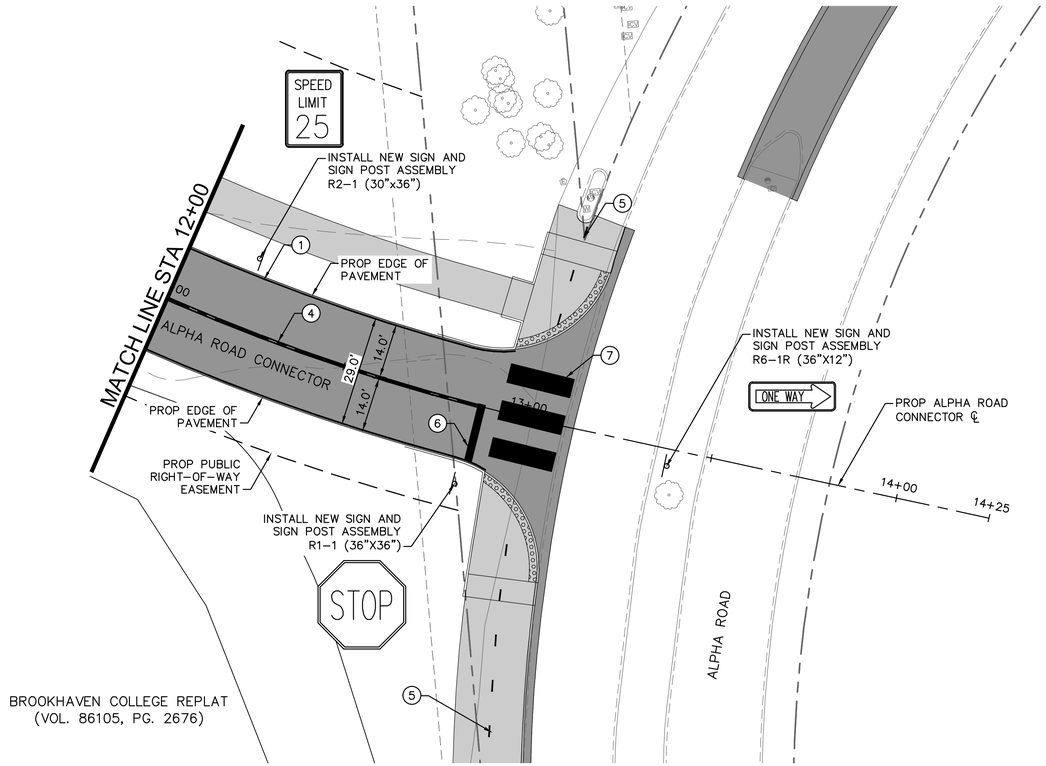


NORTH

GRAPHIC SCALE IN FEET
0 10 20 40

## STRIPING LEGEND

| | |
|---|---|
| 1 | INSTALL 4" WHITE EDGE LINE |
| 2 | INSTALL ARROW (W) |
| 3 | INSTALL 24" X 8' WHITE LINE WITH 4' SPACE (CROSSWALK) |
| 4 | INSTALL 4" DOUBLE YELLOW LINE |
| 5 | INSTALL BROKEN 4" YELLOW LINE |
| 6 | INSTALL 24" STOP BAR MARKING |
| 7 | INSTALL 5' X 17' WHITE LINE WITH 5' SPACE (CROSSWALK) |
| 8 | INSTALL YIELD LINES TY I (W) 24" (TRI) (100MIL) |

## NOTES

1. CONTRACTOR IS RESPONSIBLE FOR RELOCATION OF ANY SIGNS AND COORDINATION WITH THE CITY ON ANY NECESSARY MODIFICATIONS.
2. CONTRACTOR IS RESPONSIBLE FOR LOCATING ALL IRRIGATION FACILITIES WITHIN LOC.
3. ALL PAVEMENT MARKINGS SHALL BE 100 MIL THERMOPLASTIC UNLESS OTHERWISE NOTED

811 Know what's below. Call before you dig.

| No. | REVISIONS | DATE | BY |
|---|---|---|---|

PROJECT NO. 2021-01C/ BID NO. 21-69


Kimley»Horn
2201 WEST ROYAL LANE, SUITE 275, IRVING, TX 75063
PHONE: 214-420-5600
WWW.KIMLEY-HORN.COM


© 2021 KIMLEY-HORN AND ASSOCIATES, INC.
TEXAS REGISTERED ENGINEERING FIRM #F-928


9/10/2021
STATE OF TEXAS
RYAN DELMOTTE
114242
LICENSED
PROFESSIONAL ENGINEER

KHA PROJECT 063543031
DATE 09/10/2021
SCALE AS SHOWN
DESIGNED BY RMD
DRAWN BY CDS
CHECKED BY LNA

# TOWN OF ADDISON
ALPHA ROAD CONN.
FROM FARMERS BRANCH CREEK TO ALPHA ROAD

## PAVEMENT MARKING AND SIGNING
ALPHA ROAD CONNECTOR
STA 8+00 TO END

SHEET NUMBER
C6.02


Plotted By:Shadbolt, Cody September 08, 2021 09:14:45am K:\LAC_Civil\063543031_Addison_Alpha_Road_Connector\CADD\PlanSheets\Pavement Markings.dwg
This document, together with the concepts and designs presented herein, as an instrument of service, is intended only for the specific purpose and client for which it was prepared. Reuse of and improper reliance on this document without written authorization and adaptation by Kimley-Horn and Associates, Inc. shall be without liability to Kimley-Horn and Associates, Inc.

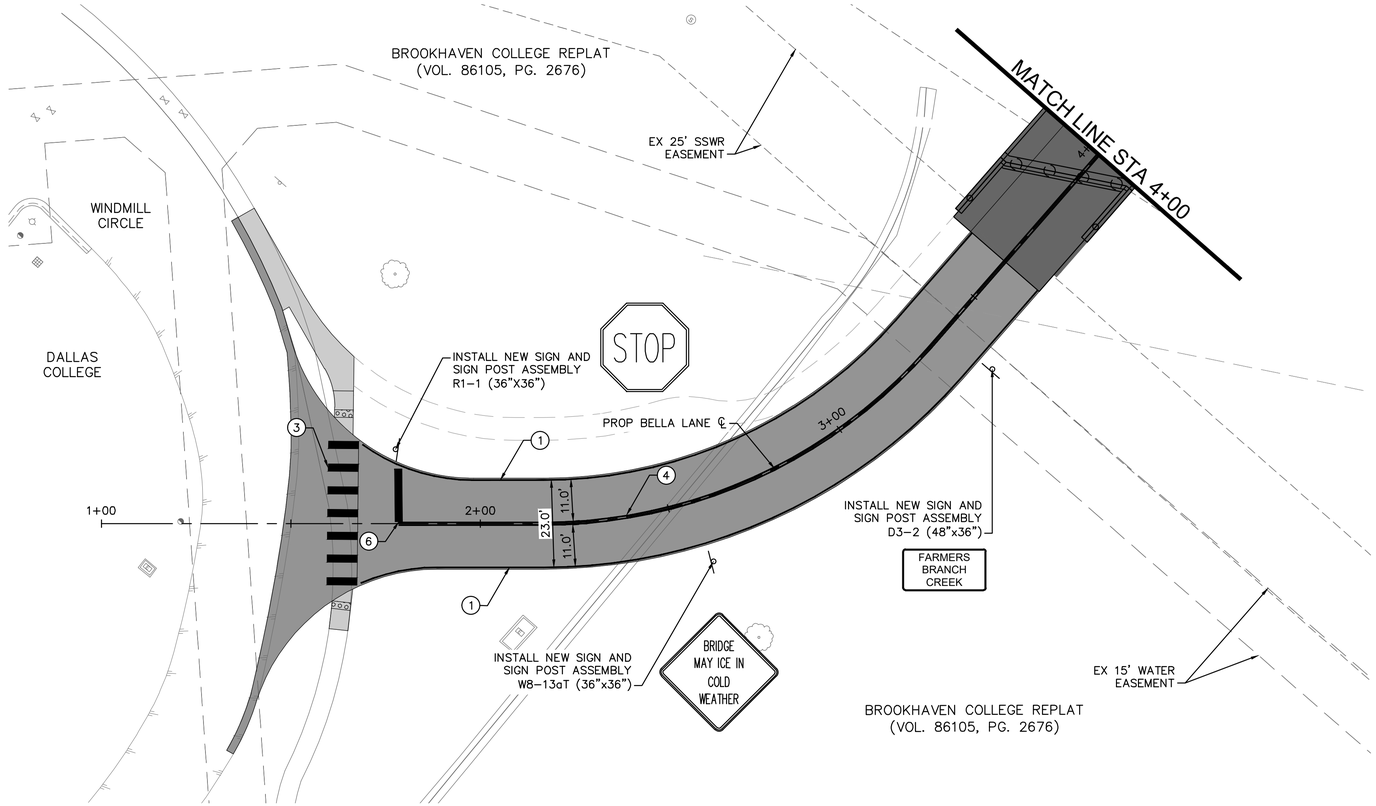


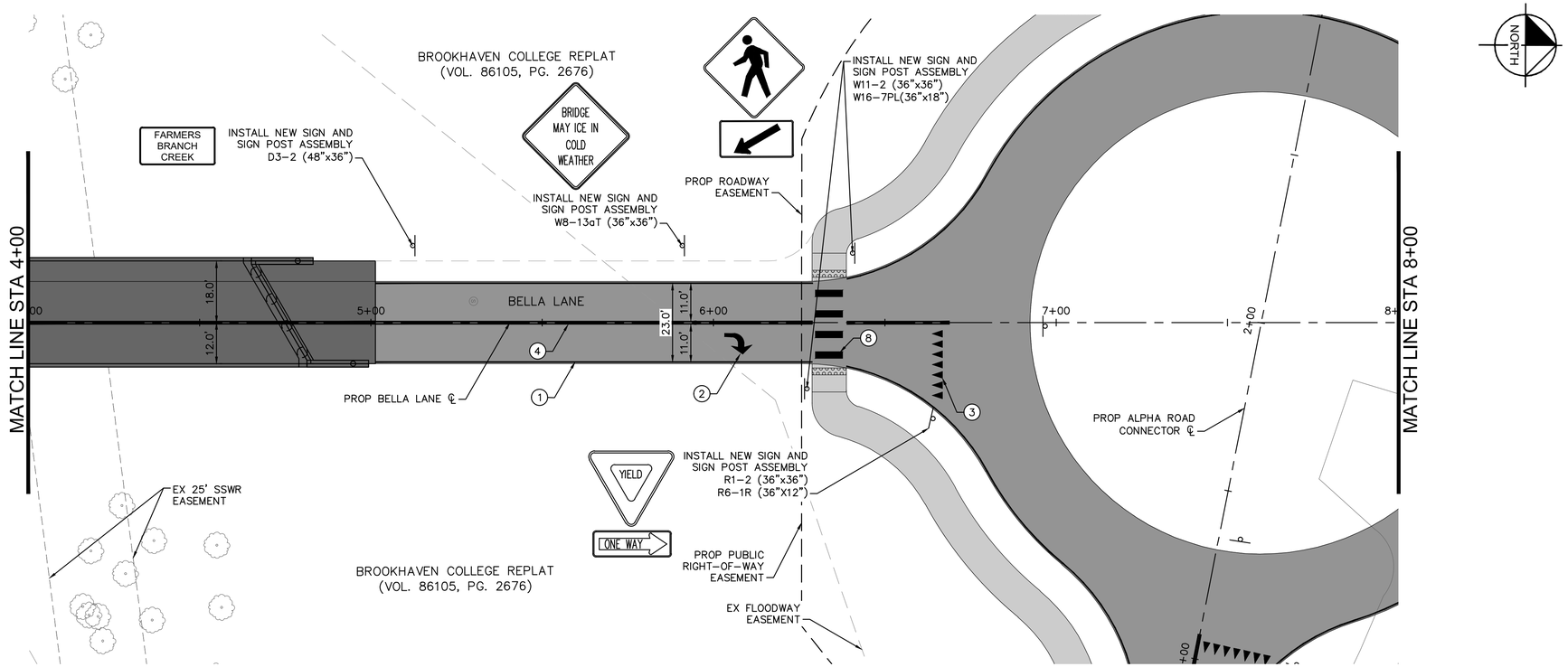


GRAPHIC SCALE IN FEET
0 10 20 40

## STRIPING LEGEND

| | |
|---|---|
| 1 | INSTALL 4" WHITE EDGE LINE |
| 2 | INSTALL ARROW (W) |
| 3 | INSTALL 24" X 8' WHITE LINE WITH 4' SPACE (CROSSWALK) |
| 4 | INSTALL 4" DOUBLE YELLOW LINE |
| 5 | INSTALL BROKEN 4" YELLOW LINE |
| 6 | INSTALL 24" STOP BAR MARKING |
| 7 | INSTALL 5' X 17' WHITE LINE WITH 5' SPACE (CROSSWALK) |
| 8 | INSTALL YIELD LINES TY I (W) 24" (TRI) (100MIL) |

## NOTES

1. CONTRACTOR IS RESPONSIBLE FOR RELOCATION OF ANY SIGNS AND COORDINATION WITH THE CITY ON ANY NECESSARY MODIFICATIONS.
2. CONTRACTOR IS RESPONSIBLE FOR LOCATING ALL IRRIGATION FACILITIES WITHIN LOC.
3. ALL PAVEMENT MARKINGS SHALL BE 100 MIL THERMOPLASTIC UNLESS OTHERWISE NOTED

811 Know what's below. Call before you dig.

| No. | REVISIONS | DATE | BY |
|---|---|---|---|

PROJECT NO. 2021-01C/ BID NO. 21-69


Kimley»Horn
2201 WEST ROYAL LANE, SUITE 275, IRVING, TX 75063
PHONE: 214-420-5600
WWW.KIMLEY-HORN.COM


© 2021 KIMLEY-HORN AND ASSOCIATES, INC.
TEXAS REGISTERED ENGINEERING FIRM #F-928


9/10/2021
STATE OF TEXAS
RYAN DELMOTTE
114242
LICENSED
PROFESSIONAL ENGINEER

KHA PROJECT 063543031
DATE 09/10/2021
SCALE AS SHOWN
DESIGNED BY RMD
DRAWN BY CDS
CHECKED BY LNA

# TOWN OF ADDISON
ALPHA ROAD CONN.
FROM FARMERS BRANCH CREEK TO ALPHA ROAD

# PAVEMENT MARKING AND SIGNING
BELLA LANE EXTENSION
BEGIN TO STA 8+00

SHEET NUMBER
C6.03


Plotted By:Shadbolt, Cody September 08, 2021 09:14:48am K:\LAC_Civil\063543031_Addison_Alpha_Road_Connector\CADD\PlanSheets\Pavement Markings.dwg
This document, together with the concepts and designs presented herein, as an instrument of service, is intended only for the specific purpose and client for which it was prepared. Reuse of and improper reliance on this document without written authorization and adaptation by Kimley-Horn and Associates, Inc. shall be without liability to Kimley-Horn and Associates, Inc.

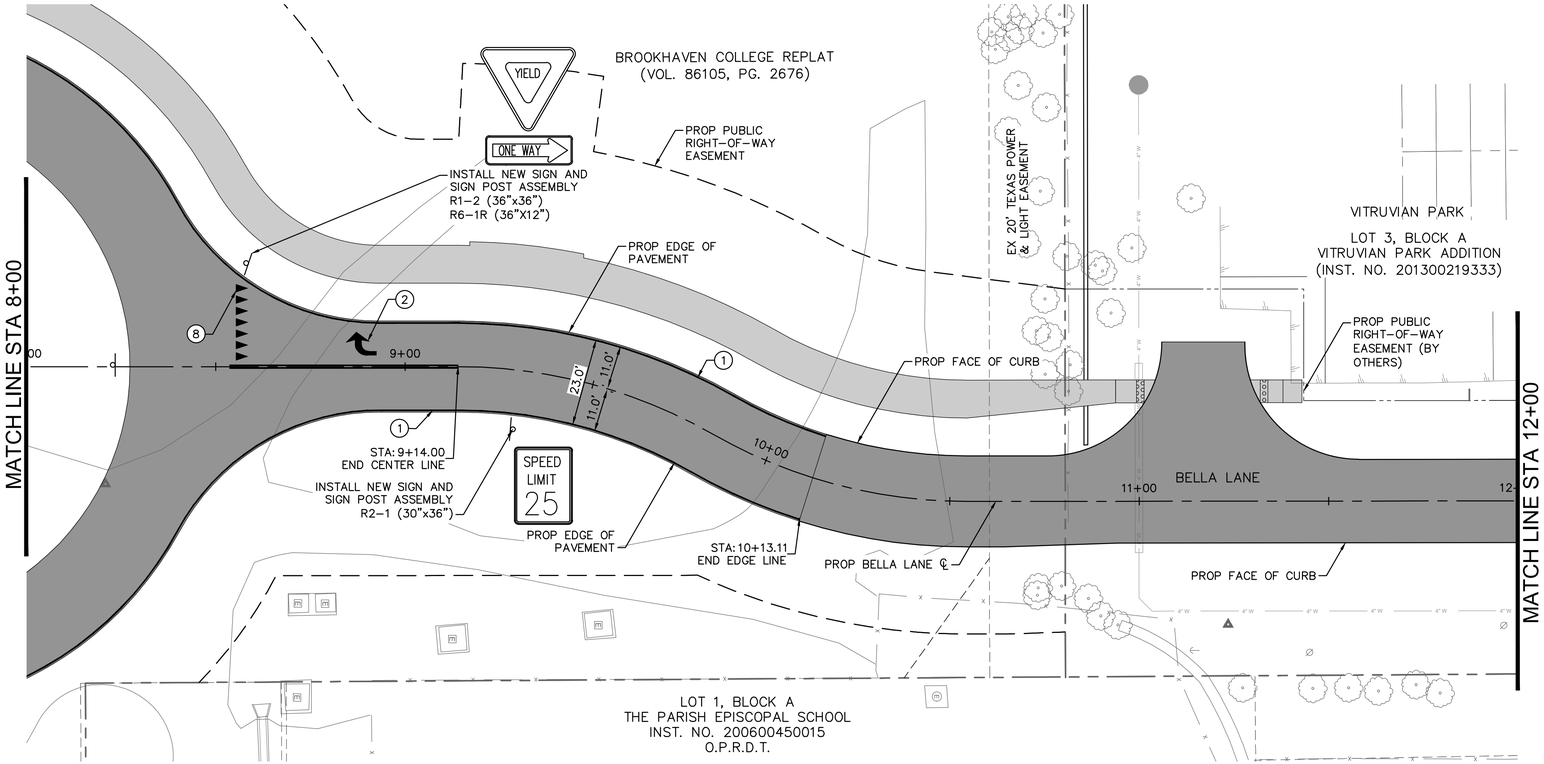


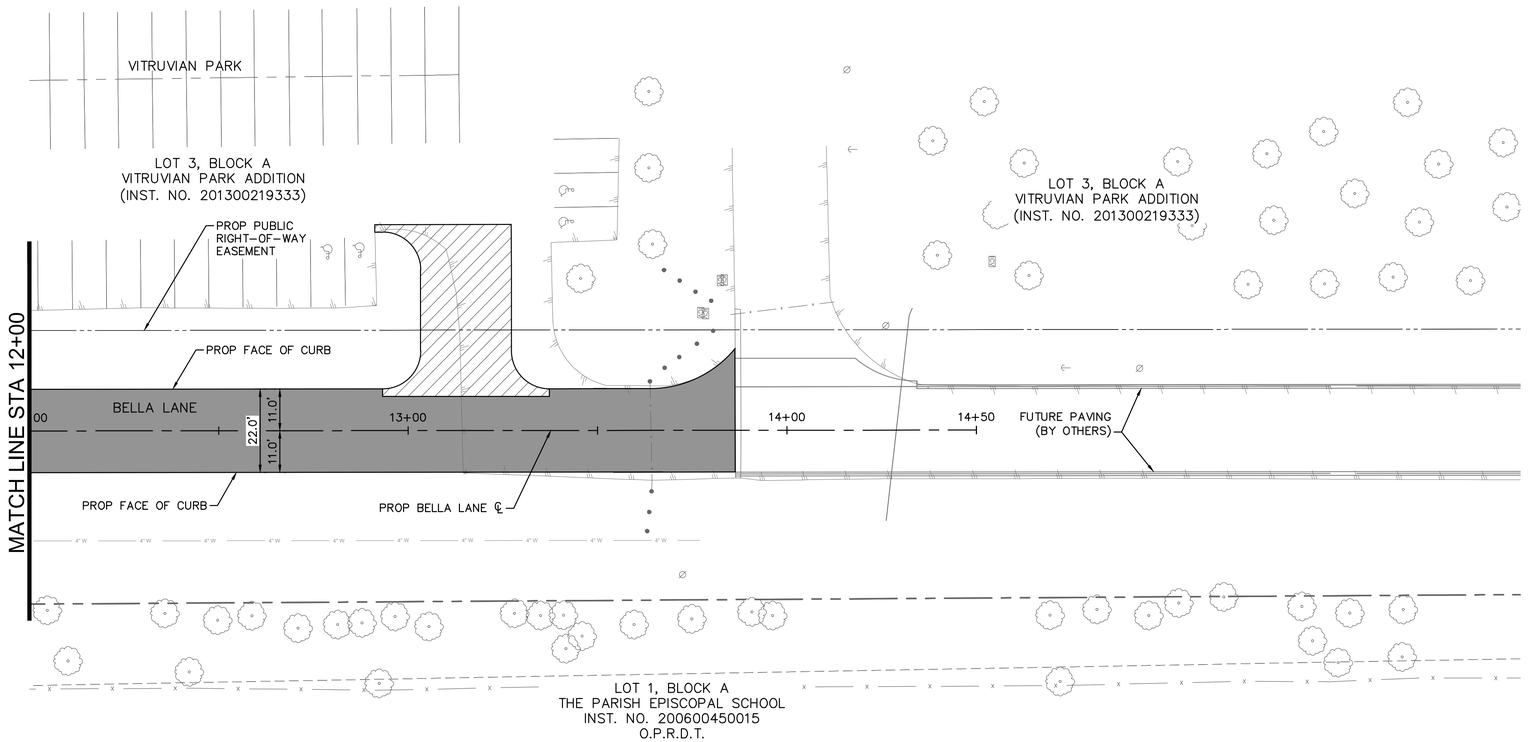


NORTH

GRAPHIC SCALE IN FEET
0 10 20 40

## STRIPING LEGEND

| | |
|---|---|
| 1 | INSTALL 4" WHITE EDGE LINE |
| 2 | INSTALL ARROW (W) |
| 3 | INSTALL 24" X 8' WHITE LINE WITH 4' SPACE (CROSSWALK) |
| 4 | INSTALL 4" DOUBLE YELLOW LINE |
| 5 | INSTALL BROKEN 4" YELLOW LINE |
| 6 | INSTALL 24" STOP BAR MARKING |
| 7 | INSTALL 5' X 17' WHITE LINE WITH 5' SPACE (CROSSWALK) |
| 8 | INSTALL YIELD LINES TY I (W) 24" (TRI) (100MIL) |

## NOTES

1. CONTRACTOR IS RESPONSIBLE FOR RELOCATION OF ANY SIGNS AND COORDINATION WITH THE CITY ON ANY NECESSARY MODIFICATIONS.
2. CONTRACTOR IS RESPONSIBLE FOR LOCATING ALL IRRIGATION FACILITIES WITHIN LOC.
3. ALL PAVEMENT MARKINGS SHALL BE 100 MIL THERMOPLASTIC UNLESS OTHERWISE NOTED

811 Know what's below. Call before you dig.

| No. | REVISIONS | DATE | BY |
|---|---|---|---|

PROJECT NO. 2021-01C/ BID NO. 21-69


Kimley»Horn
2201 WEST ROYAL LANE, SUITE 275, IRVING, TX 75063
PHONE: 214-420-5600
WWW.KIMLEY-HORN.COM


© 2021 KIMLEY-HORN AND ASSOCIATES, INC.
TEXAS REGISTERED ENGINEERING FIRM #F-928


9/10/2021
STATE OF TEXAS
RYAN DELMOTTE
114242
LICENSED
PROFESSIONAL ENGINEER

KHA PROJECT 063543031
DATE 09/10/2021
SCALE AS SHOWN
DESIGNED BY RMD
DRAWN BY CDS
CHECKED BY LNA

# TOWN OF ADDISON
ALPHA ROAD CONN.
FROM FARMERS BRANCH CREEK TO ALPHA ROAD

## PAVEMENT MARKING AND SIGNING
BELLA LANE EXTENSION
STA 8+00 TO END

SHEET NUMBER
C6.04


Plotted By:Shadbolt, Cody September 09, 2021 01:43:24pm K:\LAC_Civil\063543031_Addison_Alpha_Road_Connector\CADD\PlanSheets\Pavement Markings.dwg
This document, together with the concepts and designs presented herein, as an instrument of service, is intended only for the specific purpose and client for which it was prepared. Reuse of and improper reliance on this document without written authorization and adaptation by Kimley-Horn and Associates, Inc. shall be without liability to Kimley-Horn and Associates, Inc.

DISCLAIMER:
The use of this standard is governed by the "Texas Engineering Practice Act". No warranty of any kind is made by TxDOT for any purpose whatsoever. TxDOT assumes no responsibility for the conversion of this standard to other formats or for incorrect results or damages resulting from its use.

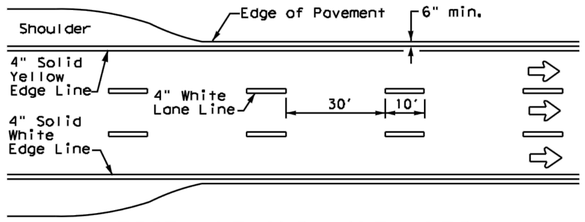


## EDGE LINE AND LANE LINES ONE-WAY ROADWAY WITH OR WITHOUT SHOULDERS

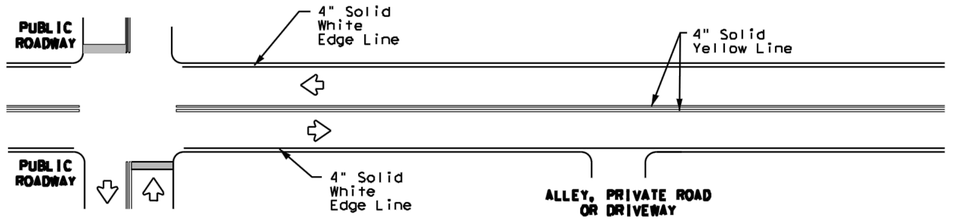


## TYPICAL TWO-LANE, TWO-WAY PAVEMENT MARKINGS THROUGH INTERSECTIONS

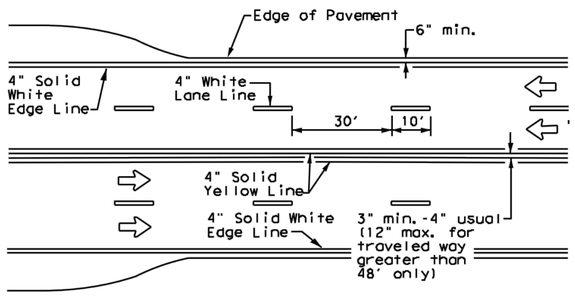


## CENTERLINE AND LANE LINES FOUR LANE TWO-WAY ROADWAY WITH OR WITHOUT SHOULDERS

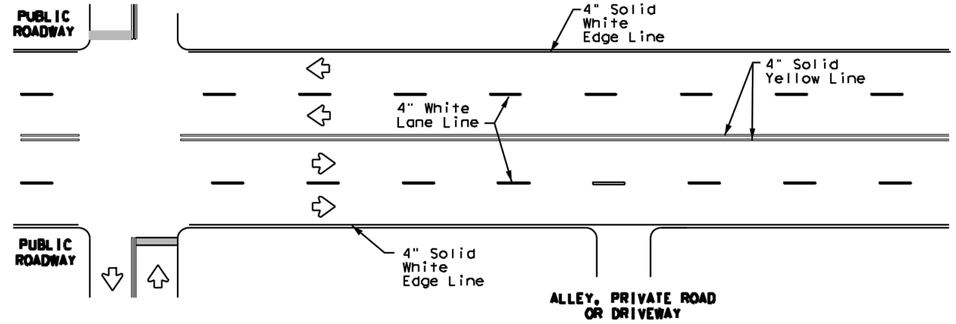


## TYPICAL MULTI-LANE, TWO-WAY PAVEMENT MARKINGS THROUGH INTERSECTIONS

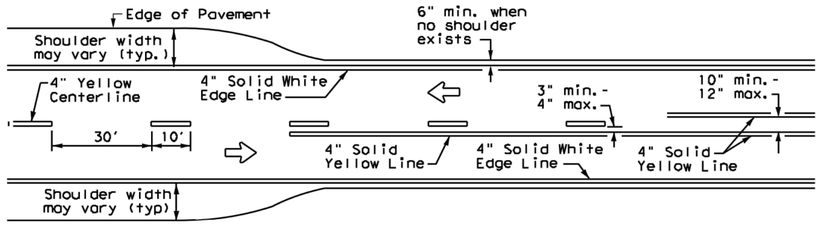


## TWO LANE TWO-WAY ROADWAY WITH OR WITHOUT SHOULDERS

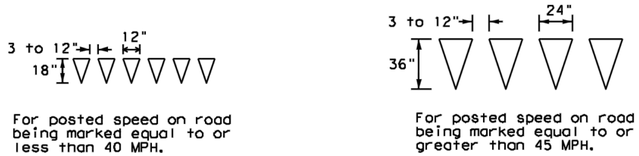


## YIELD LINES

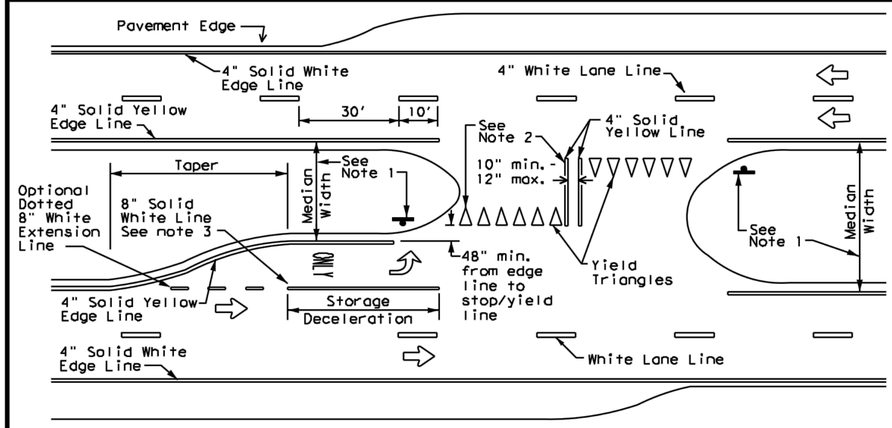


## FOUR LANE DIVIDED ROADWAY CROSSOVERS

### NOTES

1. Where divided highways are separated by median widths at the median opening itself of 30 feet or more, median openings shall be signed as two separate intersections. Each median opening has two width measurements, with one measurement for each approach. The narrow median width will be the controlling width to determine if signs are required. Yield signs are the typical intersection control. Stop signs are optional as determined by the Engineer.

2. Install median striping (double yellow centerlines and stop bars/yield triangles) when a 50' or greater median centerline can be placed. Stop bars shall only be used with stop signs. Yield traingles shall only be used with yield signs.

3. Length of turn bays, including taper, deceleration, and storage lengths shall be as shown on the plans or as directed by the Engineer.

### GENERAL NOTES

1. Edgeline striping shall be as shown in the plans or as directed by the Engineer. The edgeline should not be placed less less than 6 inches from the edge of pavement. This distance may vary due to pavement raveling or other conditions. Edgelines are not required in curb and gutter sections of roadways.

2. The traveled way includes only that portion of the roadway used for vehicular travel. It does not include the parking lanes, sidewalks, berms and shoulders. The traveled ways shall be measured from the inside of edgeline to the inside of edgeline of a two lane roadway.

| MATERIAL SPECIFICATIONS | |
|---|---|
| PAVEMENT MARKERS (REFLECTORIZED) | DMS-4200 |
| EPOXY AND ADHESIVES | DMS-6100 |
| BITUMINOUS ADHESIVE FOR PAVEMENT MARKERS | DMS-6130 |
| TRAFFIC PAINT | DMS-8200 |
| HOT APPLIED THERMOPLASTIC | DMS-8220 |
| PERMANENT PREFABRICATED PAVEMENT MARKINGS | DMS-8240 |

All pavement marking materials shall meet the required Departmental Material Specifications as specified by the plans.

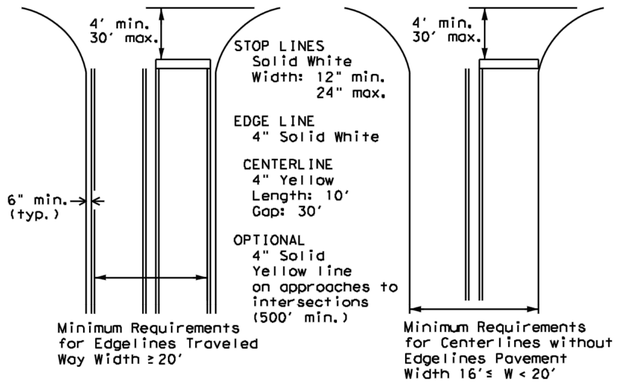


## GUIDE FOR PLACEMENT OF STOP LINES, EDGE LINE & CENTERLINE

Based on Traveled Way and Pavement Widths for Undivided Highways

Texas Department of Transportation

Traffic Safety Division Standard

# TYPICAL STANDARD PAVEMENT MARKINGS

# PM(1)-20

| FILE: pm1-20.dgn | DN: | CK: | DW: | CK: |
|---|---|---|---|---|
| ©TxDOT November 1978 | CONT | SECT | JOB | HIGHWAY |
| REVISIONS 8-95 3-03 | | | | |
| 5-00 2-12 | DIST | COUNTY | | SHEET NO. |
| 8-00 6-20 | | | | |

22A

DATE:
FILE:

DISCLAIMER:
The use of this standard is governed by the "Texas Engineering Practice Act". No warranty of any kind is made by TxDOT for any purpose whatsoever. TxDOT assumes no responsibility for the conversion of this standard to other formats or for incorrect results or damages resulting from its use.

# REFLECTIVE RAISED PAVEMENT MARKERS FOR VEHICLE POSITIONING GUIDANCE

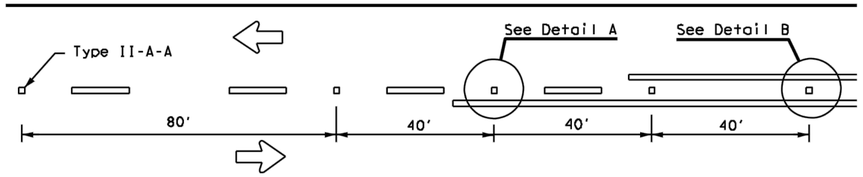


## CENTERLINE FOR ALL TWO LANE ROADWAYS

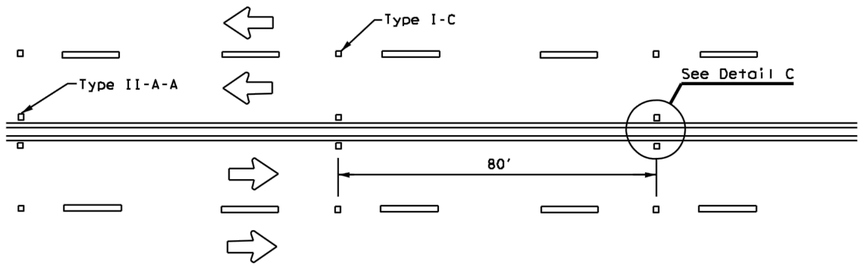


## CENTERLINE & LANE LINES FOR FOUR LANE TWO-WAY HIGHWAYS

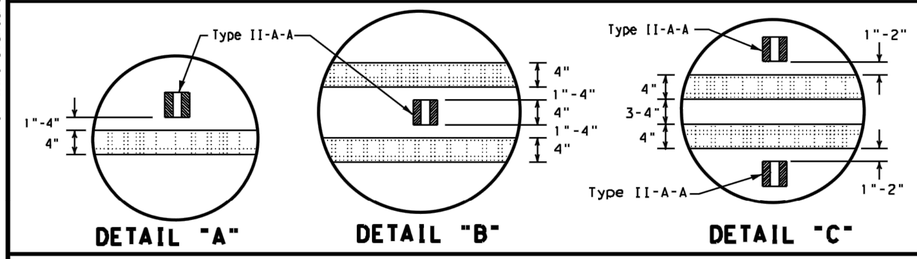


**DETAIL "A"** **DETAIL "B"** **DETAIL "C"**

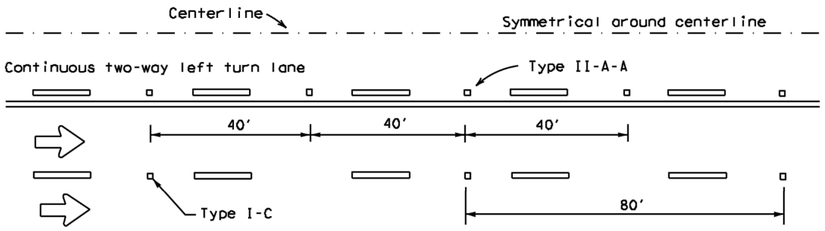


## CENTERLINE AND LANE LINES FOR TWO-WAY LEFT TURN LANE

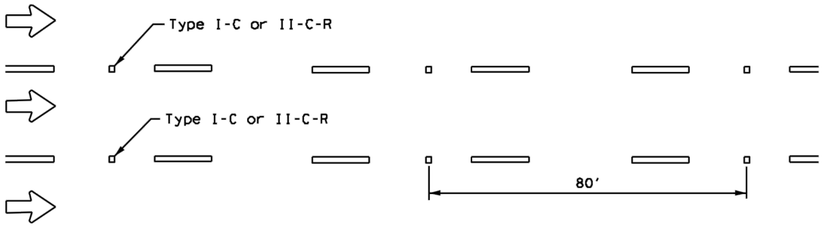


## LANE LINES FOR ONE-WAY ROADWAY (NON-FREEWAY FACILITIES)

Raised pavement markers Type II-C-R shall have clear face toward normal traffic and red face toward wrong-way traffic.

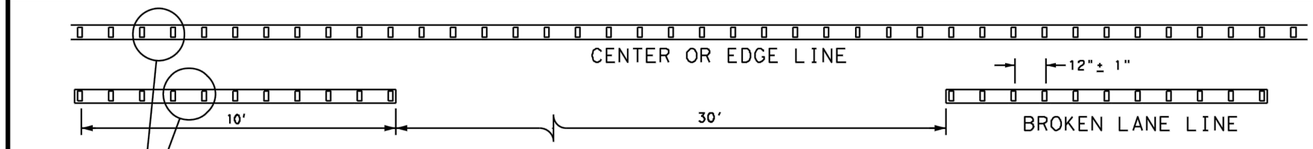


## REFLECTORIZED PROFILE PATTERN DETAIL

USING REFLECTIVE PROFILE PAVEMENT MARKINGS

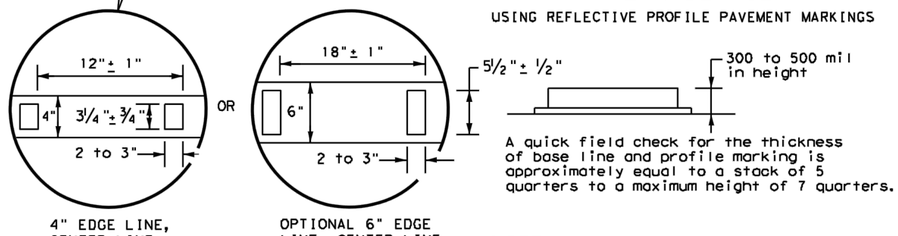


4" EDGE LINE, CENTER LINE OR LANE LINE

OPTIONAL 6" EDGE LINE, CENTER LINE OR LANE LINE

A quick field check for the thickness of base line and profile marking is approximately equal to a stack of 5 quarters to a maximum height of 7 quarters.

### NOTE

Profile markings shall not be placed on roadways with a posted speed limit of 45 MPH or less.

### GENERAL NOTES

1. All raised pavement markers placed in broken lines shall be placed in line with and midway between the stripes.
2. On concrete pavements the raised pavement markers should be placed to one side of the longitudinal joints.

| MATERIAL SPECIFICATIONS | |
|---|---|
| PAVEMENT MARKERS (REFLECTORIZED) | DMS-4200 |
| EPOXY AND ADHESIVES | DMS-6100 |
| BITUMINOUS ADHESIVE FOR PAVEMENT MARKERS | DMS-6130 |
| TRAFFIC PAINT | DMS-8200 |
| HOT APPLIED THERMOPLASTIC | DMS-8220 |
| PERMANENT PREFABRICATED PAVEMENT MARKINGS | DMS-8240 |

All pavement marking materials shall meet the required Departmental Material Specifications as specified by the plans.

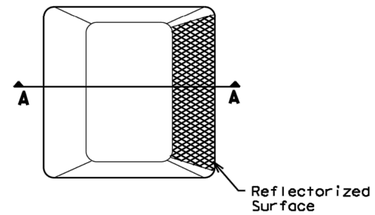


**Type I (Top View)**

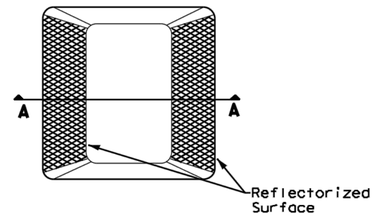


**Type II (Top View)**

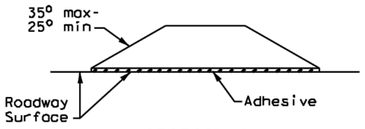


**SECTION A**

## RAISED PAVEMENT MARKERS

Texas Department of Transportation

Traffic Safety Division Standard

# POSITION GUIDANCE USING RAISED MARKERS RELECTORIZED PROFILE MARKINGS PM(2)-20

| FILE: pm2-20.dgn | DN: | CK: | DW: | CK: |
|---|---|---|---|---|
| ©TxDOT April 1977 | CONT | SECT | JOB | HIGHWAY |
| REVISIONS | | | | |
| 4-92 2-10 | DIST | COUNTY | | SHEET NO. |
| 5-00 2-12 | | | | |
| 8-00 6-20 | | | | |

228

DATE:
FILE:

DISCLAIMER:
The use of this standard is governed by the "Texas Engineering Practice Act". No warranty of any kind is made by TxDOT for any purpose whatsoever. TxDOT assumes no responsibility for the conversion of this standard to other formats or for incorrect results or damages resulting from its use.

DATE:
FILE:

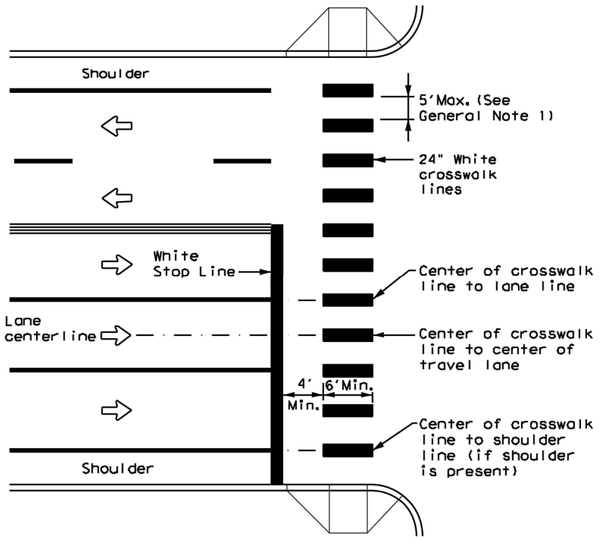


## HIGH-VISIBILITY LONGITUDINAL CROSSWALK AT CONTROLLED APPROACH

## GENERAL NOTES

1. Longitudinal crosswalk lines should not be placed in the wheel path of vehicles. Center the crosswalk lines on travel lanes, lane lines, and shoulder lines (if present).
2. A minimum 6" clear distance shall be provided to the curb face. If the last crosswalk line falls into this distance it must be omitted.
3. For divided roadways, adjustments in spacing of the crosswalk lines should be made in the median so that the crosswalk lines are maintained in their proper location across the travel portion of the roadway.
4. At skewed crosswalks, the crosswalk lines are to remain parallel to the lane lines.
5. Each crosswalk shall be a minimum of 6' wide.
6. The High-Visibility Longitudinal Crosswalk is the preferred crosswalk pattern on State Highways. Other crosswalk patterns as shown in the "Texas Manual on Uniform Traffic Control Devices" may be used. All crosswalk designs and dimension shall comply with the "Texas Manual on Uniform Traffic Control Devices."
7. Final placement of Stop Bar/Yield Triangles and Crosswalk shall be approved by the Engineer in the field.

| MATERIAL SPECIFICATIONS | |
|---|---|
| PAVEMENT MARKERS (REFLECTORIZED) | DMS-4200 |
| EPOXY AND ADHESIVES | DMS-6100 |
| BITUMINOUS ADHESIVE FOR PAVEMENT MARKERS | DMS-6130 |
| TRAFFIC PAINT | DMS-8200 |
| HOT APPLIED THERMOPLASTIC | DMS-8220 |
| PERMANENT PREFABRICATED PAVEMENT MARKINGS | DMS-8240 |

All pavement marking materials shall meet the required Departmental Material Specifications as specified by the plans.

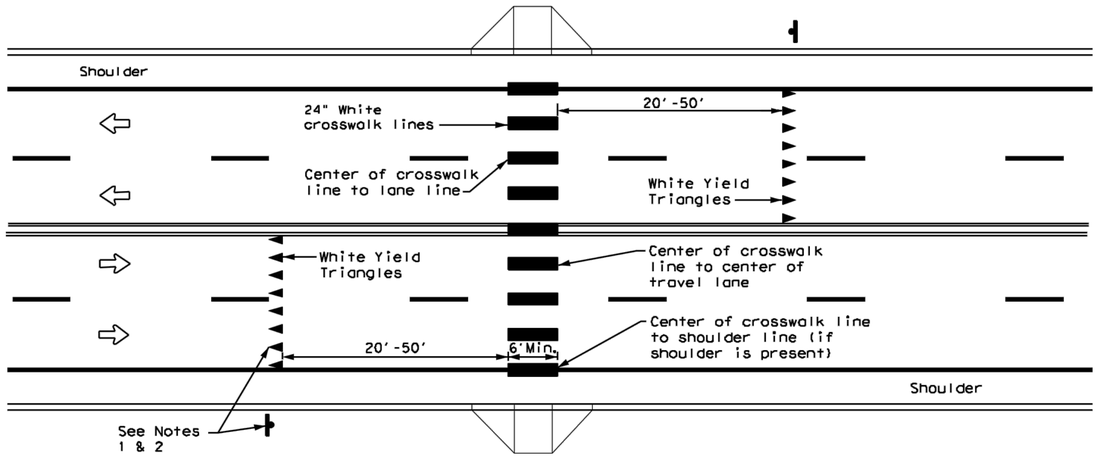


## UNSIGNALIZED MID BLOCK HIGH-VISIBILITY LONGITUDINAL CROSSWALK

## NOTES

1. Use yield triangles with "Yield Here to Pedestrians" signs at unsignalized mid block crosswalks.
2. Use stop bars with "Stop Here on Red" signs at mid block crosswalks controlled by traffic signals or pedestrian hybrid beacons.

Texas Department of Transportation

Traffic Safety Division Standard

# CROSSWALK PAVEMENT MARKINGS

# PM(4)-20

| FILE: pm4-20.dgn | DN: | CK: | DW: | CK: |
|---|---|---|---|---|
| © TxDOT June 2020 | CONT | SECT | JOB | HIGHWAY |
| REVISIONS | | | | |
| | DIST | COUNTY | | SHEET NO. |
| | | | | |

22D

DISCLAIMER: The use of this standard is governed by the "Texas Engineering Practice Act". No warranty of any kind is made by TxDOT for any purpose whatsoever. TxDOT assumes no responsibility for the conversion of this standard to other formats or for incorrect results or damages resulting from its use.

DATE:
FILE:

# SIGN SUPPORT DESCRIPTIVE CODES

(Descriptive Codes correspond to project estimate and quantities sheets)

SM RD SGN ASSM TY XXXXX(X)XX(X-XXXX)

**Post Type**

FRP = Fiberglass Reinforced Plastic Pipe (see SMD(FRP))
TWT = Thin-Walled Tubing (see SMD(TWT))
10BWG = 10 BWG Tubing (see SMD(SLIP-1) to (SLIP-3))
S80 = Schedule 80 Pipe (see SMD(SLIP-1) to (SLIP-3))

**Number of Posts (1 or 2)**

**Anchor Type**

UA = Universal Anchor - Concreted (see SMD(FRP) and (TWT))
UB = Universal Anchor - Bolted down (see SMD(FRP) and (TWT))
WS = Wedge Anchor Steel - (see SMD(TWT))
WP = Wedge Anchor Plastic (see SMD(TWT))
SA = Slipbase - Concreted (see SMD(SLIP-1) to (SLIP-3))
SB = Slipbase - Bolted Down (see SMD(SLIP-1) to (SLIP-3))

**Sign Mounting Designation**

P = Prefab. "Plain" (see SMD(SLIP-1) to (SLIP-3), (TWT), (FRP))
T = Prefab. "T" (see SMD(SLIP-1) to (SLIP-3), (TWT))
U = Prefab. "U" (see SMD(SLIP-1) to (SLIP-3))
IF REQUIRED
1EXT or 2EXT = Number of Extensions (see SMD(SLIP-1) to (SLIP-3), (TWT))
BM = Extruded Wind Beam (see SMD(SLIP-1) to (SLIP-3))
WC = 1.12 #/ft Wing Channel (see SMD(SLIP-1) to (SLIP-3))
EXAL = Extruded Aluminum Sign Panels (see SMD(SLIP-3))

# REQUIRED CLEARANCE FOR BREAKAWAY SUPPORT

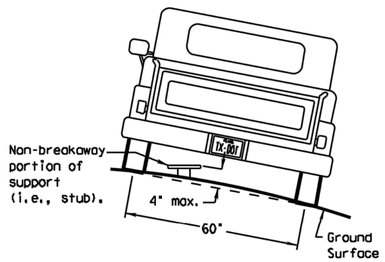


To avoid vehicle undercarriage snagging, any substantial remains of a breakaway support, when it is broken away, should not project more than 4 inches above a 60-inch chord (i.e., typical space between wheel paths).

# SIGN LOCATION

## PAVED SHOULDERS

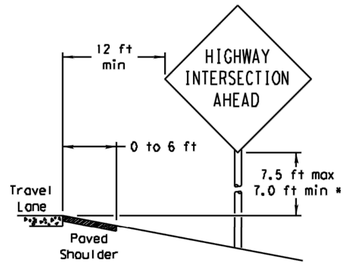


**LESS THAN 6 FT. WIDE**

When the shoulder is 6 ft. or less in width, the sign must be placed at least 12 ft. from the edge of the travel lane.

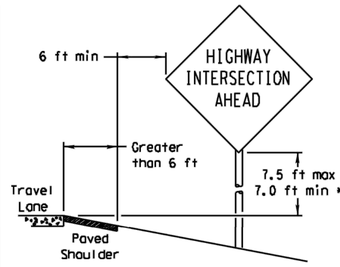


**GREATER THAN 6 FT. WIDE**

When the shoulder is greater than 6 ft in width, the sign must be placed at least 6 ft. from the edge of the shoulder.

## T-INTERSECTION

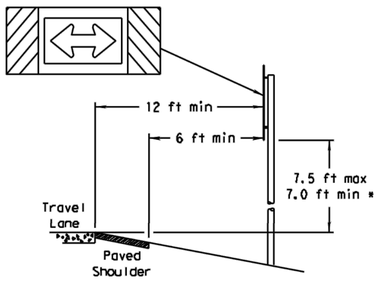


When this sign is needed at the end of a two-lane, two way roadway, the right edge of the sign should be in line with the centerline of the roadway. Place as close to ROW as practical.

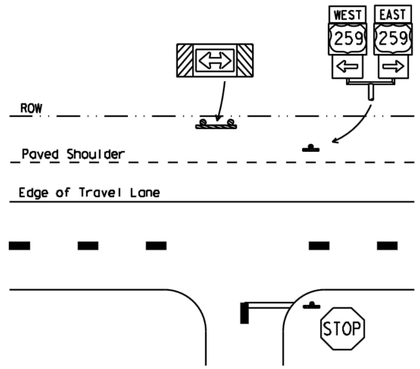


## BEHIND BARRIER

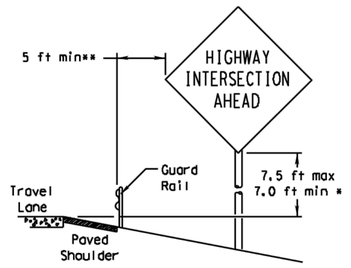


**BEHIND GUARDRAIL**

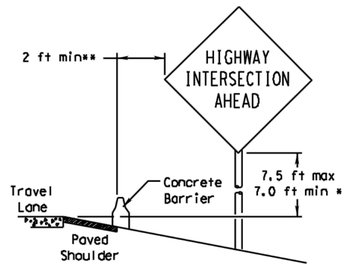


**BEHIND CONCRETE BARRIER**

**Sign clearance based on distance required for proper guard rail or concrete barrier performance.

* Signs shall be mounted using the following condition that results in the greatest sign elevation:

(1) a minimum of 7 to a maximum of 7.5 feet above the edge of the travel lane or

(2) a minimum of 7 to a maximum of 7.5 feet above the grade at the base of the support when sign is installed on the backslope.

The maximum values may be increased when directed by the Engineer.

See the Traffic Operations Division website for detailed drawings of sign clamps, Triangular Slipbase System components and Wedge Anchor System components.

The website address is:
http://www.txdot.gov/publications/traffic.htm

No more than 2 sign posts should be located within a 7 ft. circle.

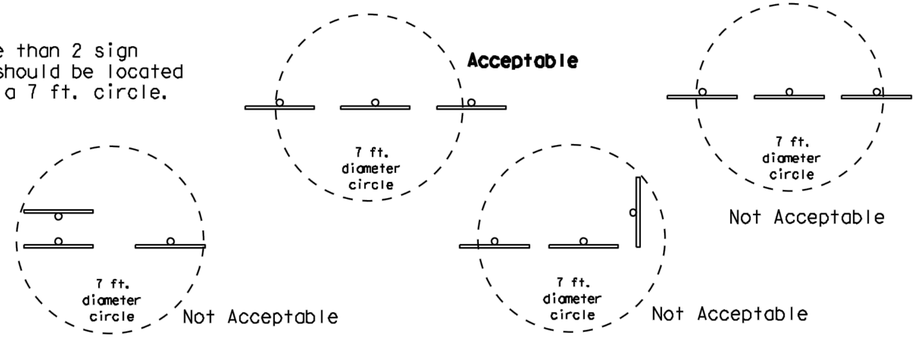


# TYPICAL SIGN ATTACHMENT DETAIL

Single Signs

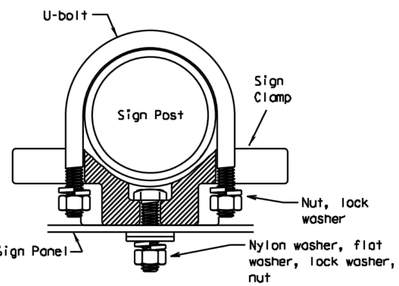


Back-to-Back Signs

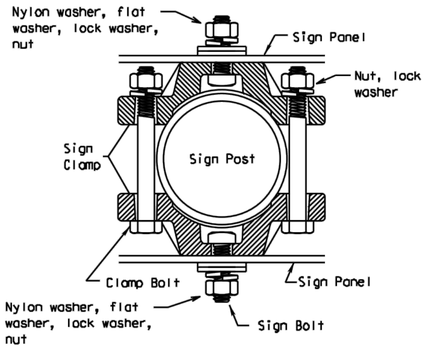


Bolts used to mount sign panels to the clamp are 5/16-18 UNC galvanized square head with nut, nylon washer, flat washer and lock washer. The bolt length is 1 inch for aluminum.

When two sign clamps are used to mount signs back-to-back, use a 5/16-18 UNC galvanized hex head per ASTM A307 with nut and helical-spring lock washer. The approximate bolt lengths for various post sizes and sign clamp types are given in the table at right. The bolt length may need to be adjusted depending upon field conditions.

Sign clamps may be either the specific size clamp or the universal clamp.

| Pipe Diameter | Approximate Bolt Length | |
|---|---|---|
| | Specific Clamp | Universal Clamp |
| 2" nominal | 3" | 3 or 3 1/2" |
| 2 1/2" nominal | 3 or 3 1/2" | 3 1/2 or 4" |
| 3" nominal | 3 1/2 or 4" | 4 1/2" |

## SIGNS WITH PLAQUES

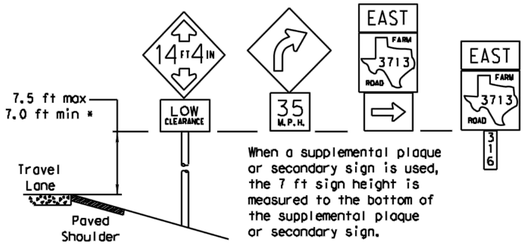


When a supplemental plaque or secondary sign is used, the 7 ft sign height is measured to the bottom of the supplemental plaque or secondary sign.

## CURB & GUTTER OR RAISED ISLAND

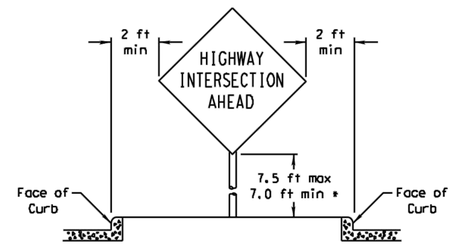


## RESTRICTED RIGHT-OF-WAY

(When 6 ft min. is not possible.)

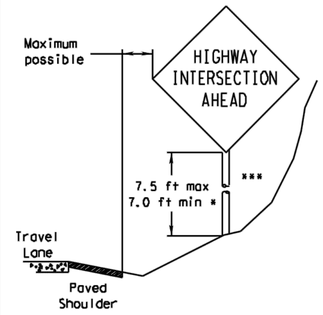


Right-of-way restrictions may be created by rocks, water, vegetation, forest, buildings, a narrow island, or other factors.

In situations where a lateral restriction prevents the minimum horizontal clearance from the edge of the travel lane, signs should be placed as far from the travel lane as practical.

*** Post may be shorter if protected by guardrail or if Engineer determines the post could not be hit due to extreme slope.

Texas Department of Transportation
Traffic Operations Division

# SIGN MOUNTING DETAILS SMALL ROADSIDE SIGNS GENERAL NOTES & DETAILS

**SMD(GEN)-08**

©TxDOT July 2002

| DN: TXDOT | CK: TXDOT | DW: TXDOT | CK: TXDOT |
|---|---|---|---|
| CONT | SECT | JOB | HIGHWAY |
| | | | |
| DIST | COUNTY | | SHEET NO. |
| | | | |

9-08 REVISIONS

DISCLAIMER:
The use of this standard is governed by the "Texas Engineering Practice Act". No warranty of any kind is made by TxDOT for any purpose whatsoever. TxDOT assumes no responsibility for the conversion of this standard to other formats or for incorrect results or damages resulting from its use.

DATE:
FILE:

T201, C201, T221, C221, T4, C4, T401, T402, C402
T203, C203, T223, C223 (2))

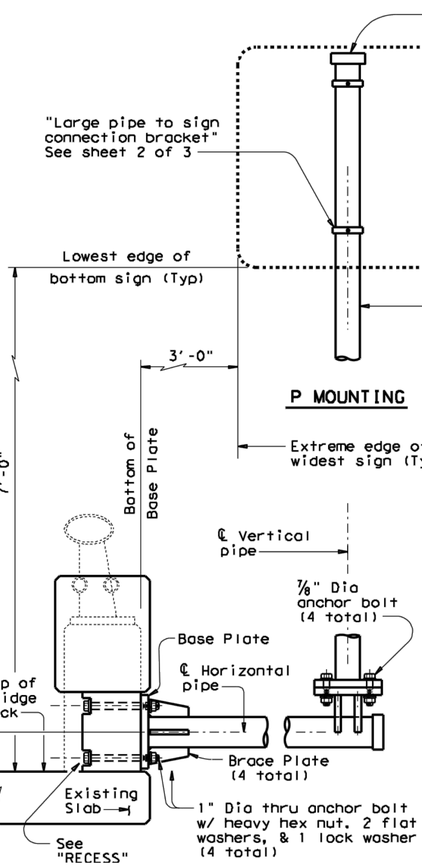


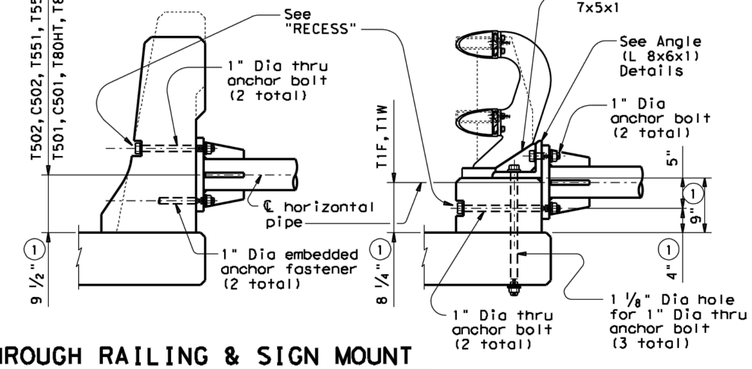





## VARIOUS SIGN ATTACHMENTS

(Mounting NOT deviated from SHSD)




P MOUNTING

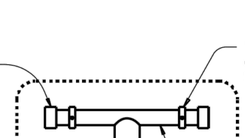


T MOUNTING

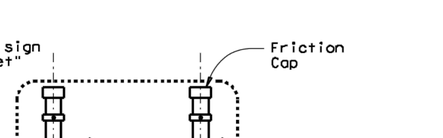


U MOUNTING

## LONGITUDINAL SECTION THROUGH RAILING & SIGN MOUNT

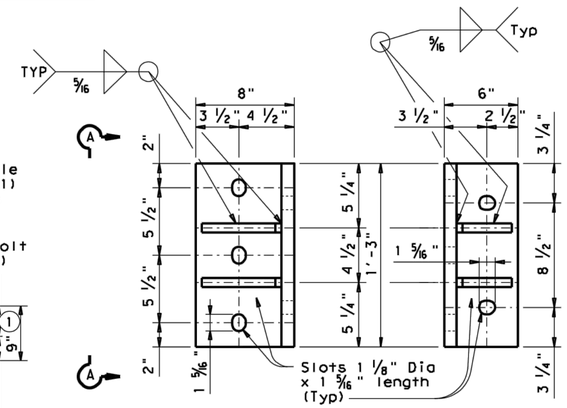


PLAN VIEW

SECTION A-A

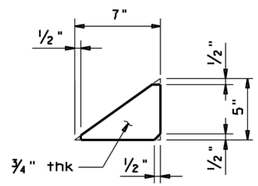


STIFFENER

ANGLE (L 8x6x1) DETAILS

① Increase 2" for structure with overlay.

② Attached at ℄ post.

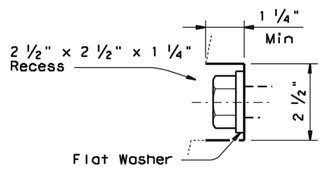


RECESS

| PIPE SIZE AND THICKNESS | | | |
|---|---|---|---|
| Pipe Placement / Design Wind Speed | Horizontal | Vertical | Bracing |
| 90 mph | 5" X-Strong (.375") | 4" X-Strong (.337") | 2 ½" Standard (.203") |
| 130 mph | 6" X-Strong (.432") | 5" X-Strong (.375") | 3" X-Strong (.300") |

## GENERAL NOTES:

Design conforms to 2013 AASHTO Standard Specifications for Highway Signs, Luminaires, and Traffic Signals and Interim Specifications thereto. Design 3-second gust wind speeds of 90 mph and 130 mph with a 1.14 gust factor, and a wind importance factor of 1.0 (50-year mean recurrence interval) for the supporting structures. For mounting connection between sign panel and pipe, wind importance factors of 0.71 and 0.54, for 90 mph and 130 mph winds, respectively, are applied to adjust the wind speeds to a 10-year mean recurrence interval.

See standard sheet WV & IZ(LTS2013) for the boundaries of each design wind zone. All mounting shall be based on 130 mph wind speed design except when located in 90 mph wind zone. Maximum panel area is 30 sq. ft. Maximum design height is 50 ft, with design height defined as the distance between natural ground (average elevation of surrounding terrain) and the center of sign(s) at the mounting location.

Material for pipe shall be ASTM A53 Grade B, or A501. Structural steel plates shall be ASTM A36, A572 Grade 50, or A588. Bolts used to connect pipe and mounting bracket, and wind beam to sign panel shall be ASTM A307. Anchor bolts shall be ASTM A325 or A193 B7. Each anchor bolt shall be provided with 2 flat washers, 1 lock washer, and 1 heavy hex nut. All parts shall be galvanized in accordance with Standard Specifications Item 445, "Galvanizing".

Attach horizontal pipe at least 2'-0" from the edge of any nearby drain slot.

Contractor shall verify applicable field dimensions before fabrication. Holes drilled through the railing parapet wall shall be drilled with rotary (coring or masonry drill) type equipment. Percussion (star) drilling shall not be allowed. Anchorage for pipe attached to rail shall be placed using an anchoring system approved by the engineer. Installation of anchor fasteners including hole depth, diameter and material shall be in accordance with the manufacturers' recommendation.

Each embedded anchor fastener shall resist an allowable design loading (after applying the reduction factors of bolt spacing and bolt edge distance) of:

| | 130 mph | 90 mph |
|---|---|---|
| Tension | 12.5 kips | 7.5 kips |
| Shear | 9.0 kips | 5.0 kips |

Each anchoring system shall provide a capacity to resist the required tension and shear acting simultaneously.

For sign connection to mounting, shop drill holes on sign blank in accordance with the current Standard Highway Sign Designs for Texas (SHSD). Additional hole(s) needed to meet a stipulated-type mounting may be field drilled. For multi-sign or back-to-back signs mounting, the engineer shall determine the proper type which ensures each individual mounting meets requirements.

Refer to Standard sheets SMD(GEN), SMD(SLIP-2 and SMD(2-1) for details not covered here.

SHEET 1 OF 3

Texas Department of Transportation

Traffic Operations Division Standard

# BRIDGE RAILING SIGN MOUNT DETAILS

## SMD(BR-1)-14

| FILE: smdbr-14.dgn | DN: TxDOT | CK: TxDOT | DW: TxDOT | CK: TxDOT |
|---|---|---|---|---|
| ©TxDOT August 2014 | CONT | SECT | JOB | HIGHWAY |
| REVISIONS | | | | |
| | DIST | COUNTY | | SHEET NO. |

266

DISCLAIMER:
The use of this standard is governed by the "Texas Engineering Practice Act". No warranty of any kind is made by TxDOT for any purpose whatsoever. TxDOT assumes no responsibility for the conversion of this standard to other formats or for incorrect results or damages resulting from its use.

DATE:
FILE:

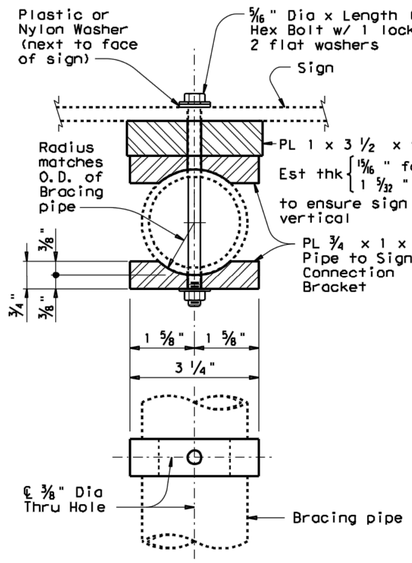


## BRACING PIPE TO SIGN CONNECTION BRACKET DETAILS

(Showing T Mounting)

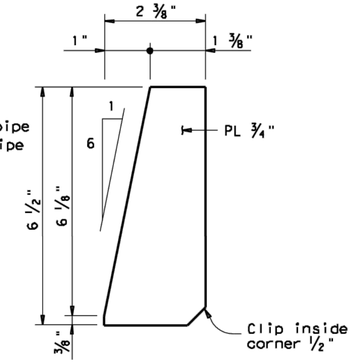


## BRACE PLATE DETAILS

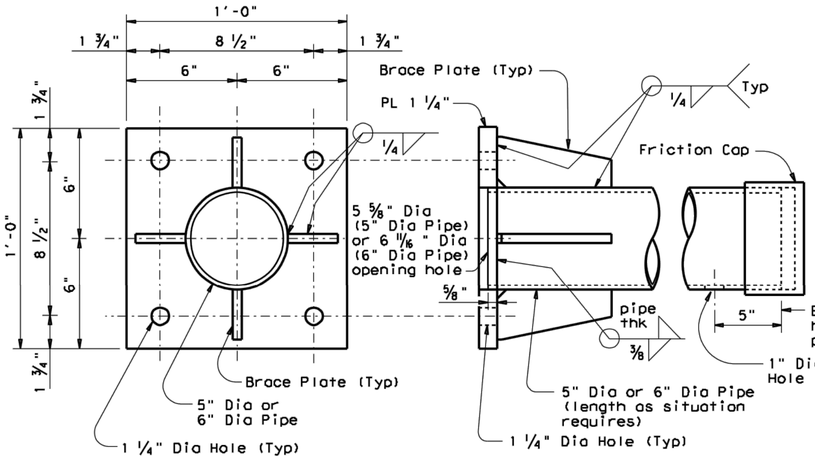


## BASE PLATE DETAILS

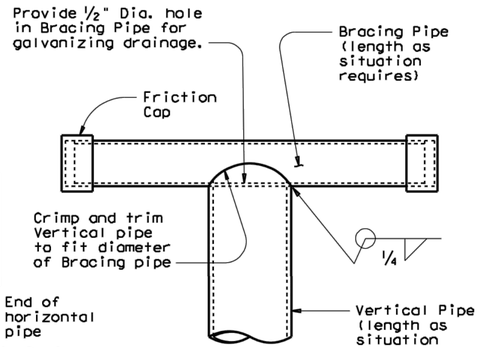


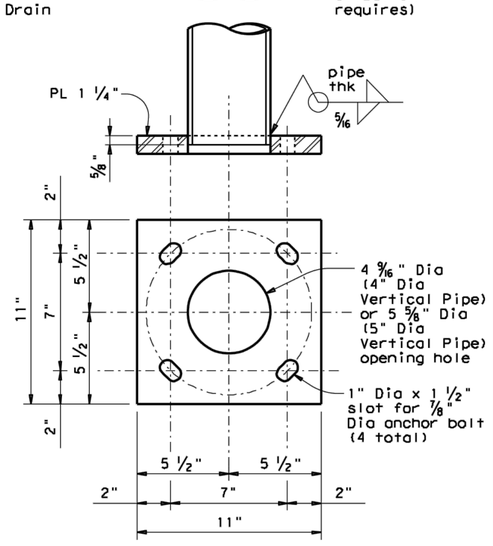


## SIGN POLE & POLE BASE PLATE DETAILS

(Showing only T Mounting)

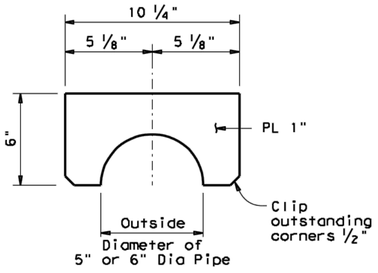


## SIGN POLE SUPPORT PLATE BRACKET DETAILS

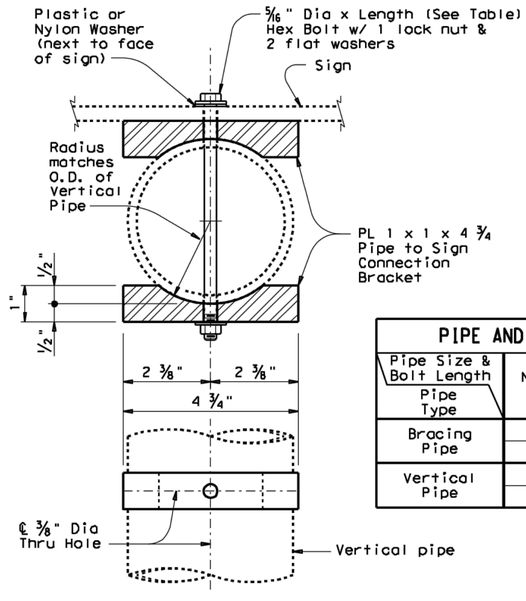


## LARGE PIPE TO SIGN CONNECTION BRACKET DETAILS

(Showing P or T Mounting)

| PIPE AND BOLT SPECIFICATIONS | | |
|---|---|---|
| Pipe Size & Bolt Length / Pipe Type | Nominal Pipe Dia (in.) | Bolt Length (in.) |
| Bracing Pipe | 2 1/2 | 6 |
| | 3 | 7 |
| Vertical Pipe | 4 | 7 |
| | 5 | 8 |

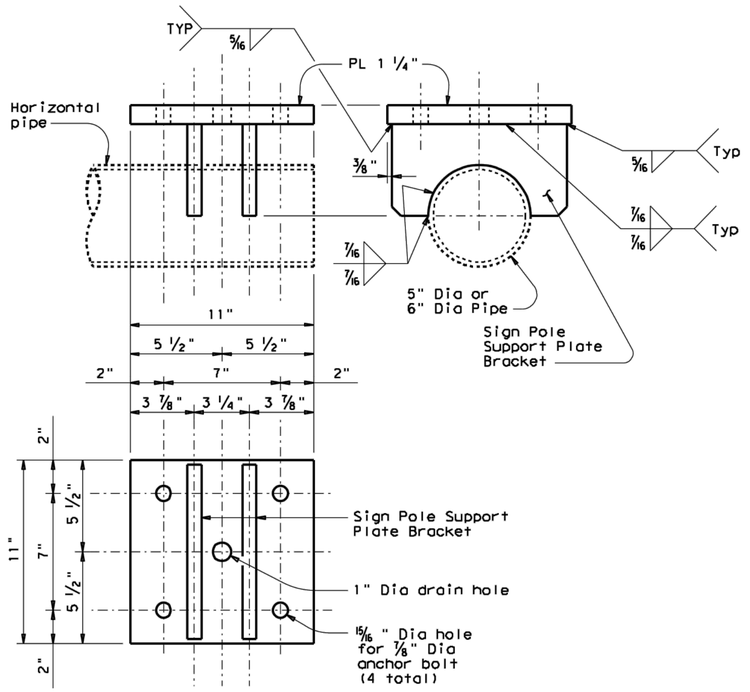


## SIGN POLE SUPPORT PLATE DETAILS

SHEET 2 OF 3

Texas Department of Transportation

Traffic Operations Division Standard

# BRIDGE RAILING SIGN MOUNT DETAILS

## SMD(BR-2)-14

| FILE: smdbr-14.dgn | DN: TxDOT | CK: TxDOT | DW: TxDOT | CK: TxDOT |
|---|---|---|---|---|
| ©TxDOT August 2014 | CONT | SECT | JOB | HIGHWAY |
| REVISIONS | DIST | COUNTY | | SHEET NO. |

26H

DISCLAIMER:
The use of this standard is governed by the "Texas Engineering Practice Act". No warranty of any kind is made by TxDOT for any purpose whatsoever. TxDOT assumes no responsibility for the conversion of this standard to other formats or for incorrect results or damages resulting from its use.

DATE:
FILE:

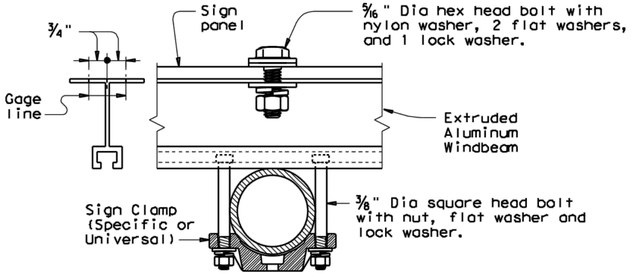


DETAIL 1

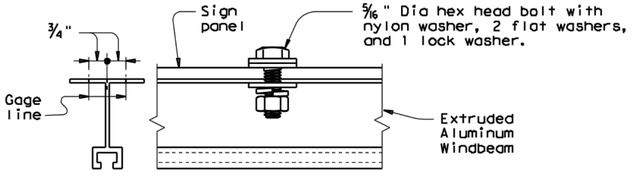


DETAIL 2

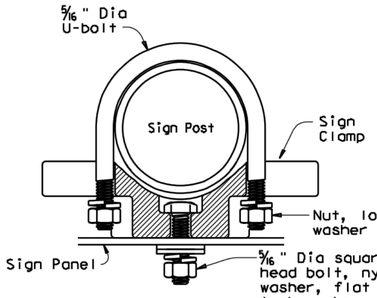


DETAIL 3

| SIGN SHAPE | SQUARE | | | HORIZONTAL RECTANGLE | | | VERTICAL RECTANGLE | | | DIAMOND | | | OCTAGON | | | EQUILATERAL TRIANGLE | | | INTERSTATE SHIELD | PENTAGON (SCHOOL) | |
|---|---|---|---|---|---|---|---|---|---|---|---|---|---|---|---|---|---|---|---|---|---|
| Type of Sign Mounting on SHSD / Design Wind Speed | P | T | U | P | T | U | P | T | U | P | T | U | P | T | U | P | T | U | P | P | T |
| 90 mph | | | | | (Type 23) 60"x48" | (Type 3) 72"x36" 78"x36"<br>(Type 23) 72"x30" 84"x24" | | (Type 2) 36"x48"<br>(Type 32) 36"x60" 36"x72" 42"x60" 48"x54" 48"x60" 48"x72"<br>(Type 3) 48"x84" | | | (Type 3) 60"x60" | | | | | | | | | (Type Special) 45"x36" | | |
| 130 mph | (Type 1) 30"x30" 36"x36" | (Type 3) 48"x48" | | (Type 1) 36"x24" 36"x30" | (Type 23) 48"x42" 54"x42" 60"x30" 66"x36" 84"x24"<br>(Type 3) 60"x48" | (Type 3) 72"x36" 78"x36"<br>(Type 23) 72"x30" 84"x24" | (Type 1) 30"x36" 30"x42" | (Type 3) 36"x48" 36"x60" 36"x72" 42"x60" 48"x54" 48"x60"<br>(Type 4) 48"x72" 48"x84" | (Type 3) 48"x60" | (Type 1) 36"x36" | (Type 3) 48"x48" 60"x60" | | | | | (Type 1) 48"x48" | | | (Type Special) 36"x36" 45"x36" | | |

Notes:
1. Drill holes in addition to the hole pattern of the Standard Highway Sign Designs for Texas (SHSD) at specified locations to meet a stipulated-type mounting indicated in the parenthesis ( ).
2. "Blank" in the above table indicates all other signs excluded from stipulated mounting shall be mounted in accordance with SHSD.

(1) In lieu of welding, the Fabricator may bend bracing pipe elbows if the following conditions are met:
a. Spacing between vertical bracing pipes is equal to or greater than 2'-6".
b. Bending radius is 12".
c. The distance between the lowest clamp and centerline of horizontal bent pipe is 13" max.

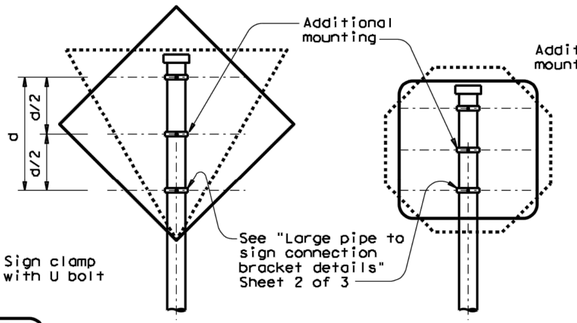


TYPE 1

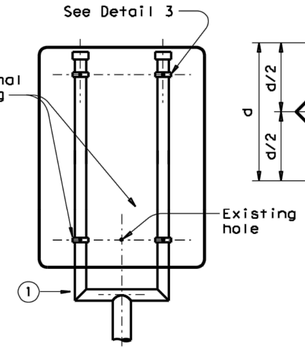


TYPE 2

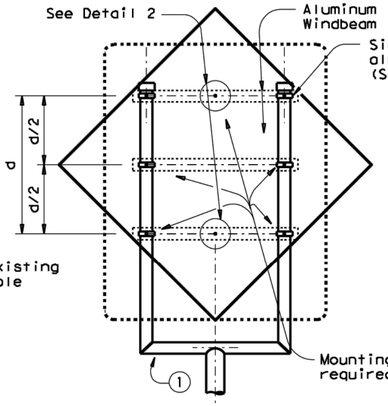


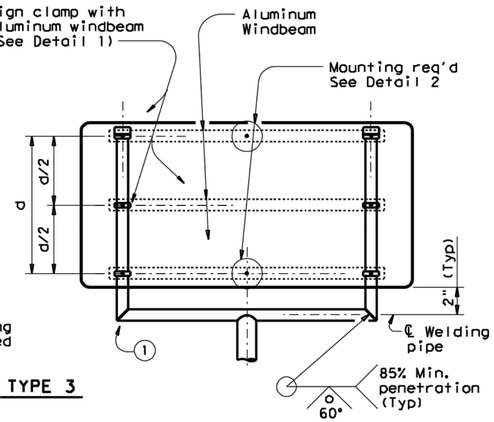


TYPE 3

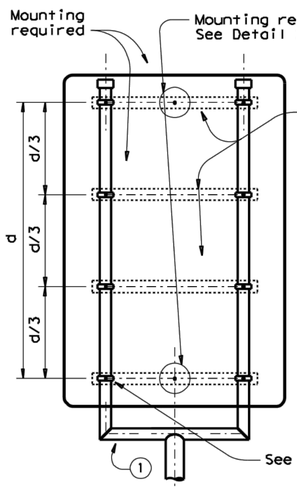


TYPE 4

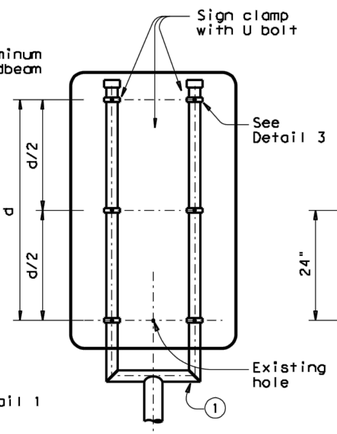


TYPE 32

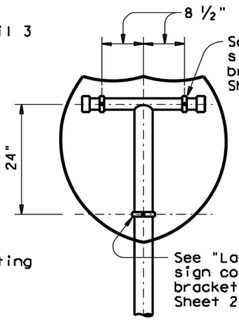


TYPE SPECIAL

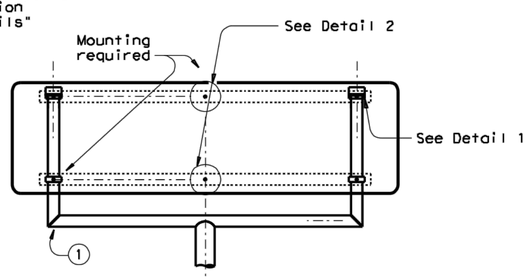


TYPE 23

SHEET 3 OF 3

Texas Department of Transportation

Traffic Operations Division Standard

# BRIDGE RAILING SIGN MOUNT DETAILS

## SMD(BR-3)-14

| FILE: smdbr-14.dgn | DN: TxDOT | CK: TxDOT | DW: TxDOT | CK: TxDOT |
|---|---|---|---|---|
| ©TxDOT August 2014 | CONT | SECT | JOB | HIGHWAY |
| REVISIONS | DIST | COUNTY | | SHEET NO. |

DISCLAIMER: The use of this standard is governed by the "Texas Engineering Practice Act". No warranty of any kind is made by TxDOT for any purpose whatsoever. TxDOT assumes no responsibility for the conversion of this standard to other formats or for incorrect results or damages resulting from its use.

# TRIANGULAR SLIPBASE INSTALLATION GENERAL REQUIREMENTS

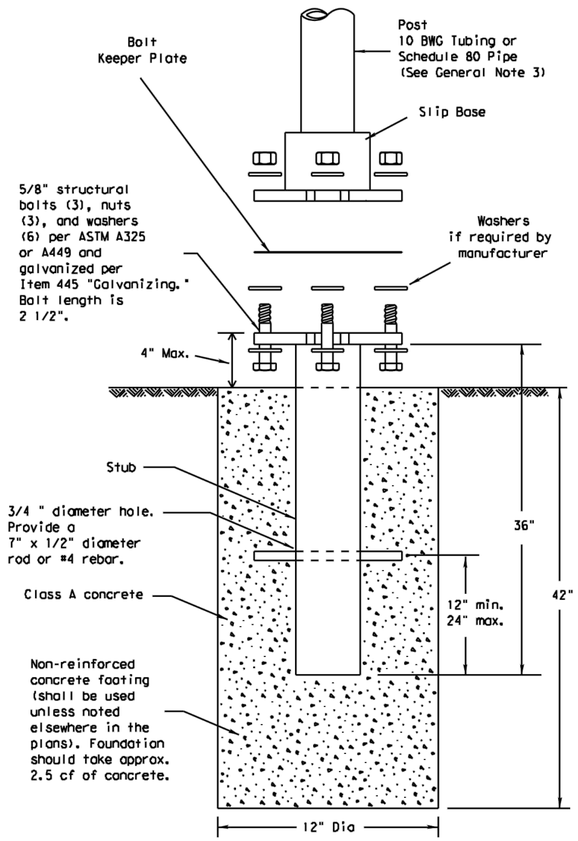


SM RD SGN ASSM TY XXXXX(X)SA(X-XXXX)

**NOTE**

**There are various devices approved for the Triangular Slipbase System. Please reference the Material Producer List for approved slip base systems. http://www.txdot.gov/business/producer_list.htm The devices shall be installed per manufacturers' recommendations. Installation procedures shall be provided to the Engineer by Contractor.**

GENERAL NOTES:

1. Slip base shall be permanently marked to indicate manufacturer. Method, design, and location of marking are subject to approval of the TxDOT Traffic Standards Engineer.
2. Material used as post with this system shall conform to the following specifications:
   10 BWG Tubing (2.875" outside diameter)
   - 0.134" nominal wall thickness
   - Seamless or electric-resistance welded steel tubing or pipe
   - Steel shall be HSLAS Gr 55 per ASTM A1011 or ASTM A1008
   - Other steels may be used if they meet the following:
     - 55,000 PSI minimum yield strength
     - 70,000 PSI minimum tensile strength
     - 20% minimum elongation in 2"
   - Wall thickness (uncoated) shall be within the range of 0.122" to 0.138"
   - Outside diameter (uncoated) shall be within the range of 2.867" to 2.883"
   - Galvanization per ASTM A123 or ASTM A653 G210. For precoated steel tubing (ASTM A653), recoat tube outside diameter weld seam by metallizing with zinc wire per ASTM B833.

   Schedule 80 Pipe (2.875" outside diameter)
   - 0.276" nominal wall thickness
   - Steel tubing per ASTM A500 Gr C
   - Other seamless or electric-resistance welded steel tubing or pipe with equivalent outside diameter and wall thickness may be used if they meet the following:
     - 46,000 PSI minimum yield strength
     - 62,000 PSI minimum tensile strength
     - 21% minimum elongation in 2"
   - Wall thickness (uncoated) shall be within the range of 0.248" to 0.304"
   - Outside diameter (uncoated) shall be within the range of 2.855" to 2.895"
   - Galvanization per ASTM A123
3. See the Traffic Operations Division website for detailed drawings of sign clamps and Texas Universal Triangular Slipbase System components. The website address is: http://www.txdot.gov/publications/traffic.htm
4. Sign supports shall not be spliced except where shown. Sign support posts shall not be spliced.

ASSEMBLY PROCEDURE

Foundation

1. Prepare 12-inch diameter by 42-inch deep hole. If solid rock is encountered, the depth of the foundation may be reduced such that it is embedded a minimum of 18 inches into the solid rock.
2. The Engineer may permit batches of concrete less than 2 cubic yards to be mixed with a portable, motor-driven concrete mixer. For small placements less than 0.5 cubic yards, hand mixing in a suitable container may be allowed by Engineer. Concrete shall be Class A.
3. Push the pipe end of the slip base stub into the center of the concrete. Rotate the stub back and forth while pushing it down into the concrete to assure good contact between the concrete and stub. Continue to work the stub into the concrete until it is between 2 to 4 inches above the ground.
4. Plumb the stub. Allow a minimum of 4 days to set, unless otherwise directed by the Engineer.
5. The triangular slipbase system is multidirectional and is designed to release when struck from any direction.

Support

1. Cut support so that the bottom of the sign will be 7 to 7.5 feet above the edge of the travelway (i.e., edge of the closest lane) when slip plate is below the edge of pavement or 7 to 7.5 feet above slip plate when the slip plate is above the edge of the travelway. The cut shall be plumb and straight.
2. Attach sign to support using connections shown. When multiple signs are installed on the same support, ensure the minimum clearance between each sign is maintained. See SMD(SLIP-2) for clearances based on sign types.

## CONCRETE ANCHOR

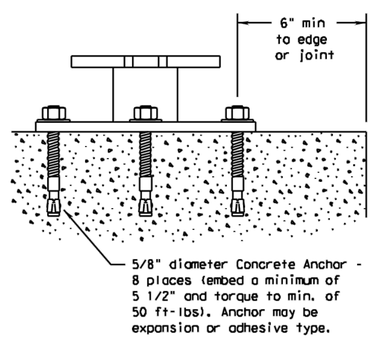


SM RD SGN ASSM TY XXXXX(X)SB(X-XXXX)

Concrete anchor consists of 5/8" diameter stud bolt with UNC series bolt threads on the upper end. Heavy hex nut per ASTM A563, and hardened washer per ASTM F436. The stud bolt shall have a minimum yield and ultimate tensile strength of 50 and 75 KSI, respectively. Nuts, bolts and washers shall be galvanized per Item 445, "Galvanizing." Adhesive type anchors shall have stud bolts installed with Type III epoxy per DMS-6100, "Epoxies and Adhesives." Adhesive anchors may be loaded after adequate epoxy cure time per the manufacturer's recommendations. Top of bolt shall extend at least flush with top of the nut when installed. The anchor, when installed in 4000 psi normal-weight concrete with a 5 1/2" minimum embedment, shall have a minimum allowable tension and shear of 3900 and 3100 psi, respectively.

Texas Department of Transportation
Traffic Operations Division

# SIGN MOUNTING DETAILS
# SMALL ROADSIDE SIGNS
# TRIANGULAR SLIPBASE SYSTEM

## SMD(SLIP-1)-08

| ©TxDOT July 2002 | DN: TXDOT | CK: TXDOT | DW: TXDOT | CK: TXDOT |
|---|---|---|---|---|
| REVISIONS | CONT | SECT | JOB | HIGHWAY |
| 9-08 | | | | |
| | DIST | COUNTY | | SHEET NO. |
| | | | | |

DATE:
FILE:

DISCLAIMER: The use of this standard is governed by the "Texas Engineering Practice Act". No warranty of any kind is made by TxDOT for any purpose whatsoever. TxDOT assumes no responsibility for the conversion of this standard to other formats or for incorrect results or damages resulting from its use.

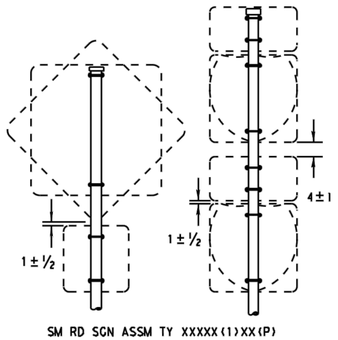


SM RD SGN ASSM TY XXXXX(1)XX(P)

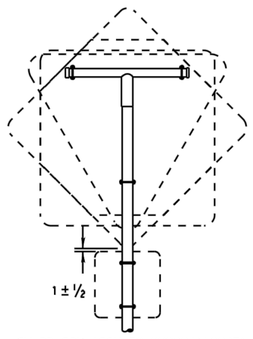


SM RD SGN ASSM TY XXXXX(1)XX(T)

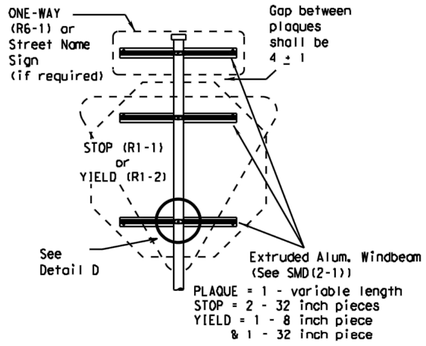


SM RD SGN ASSM TY XXXXX(1)XX(P-BM)

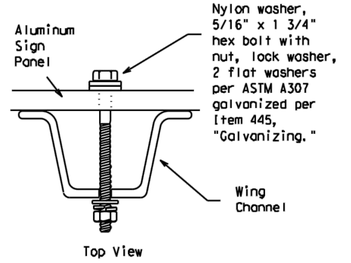


**Detail A**

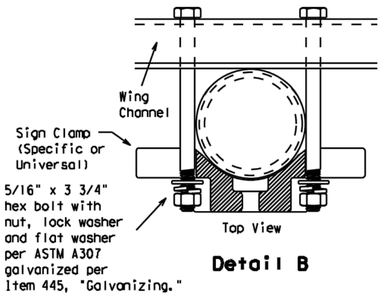


**Detail B**

**GENERAL NOTES:**

| SIGN SUPPORT | # OF POSTS | MAX. SIGN AREA |
|---|---|---|
| 10 BWG | 1 | 16 SF |
| 10 BWG | 2 | 32 SF |
| Sch 80 | 1 | 32 SF |
| Sch 80 | 2 | 64 SF |

1. The Engineer may require that a Schedule 80 post be used in place of a 10 BWG where a sign height is abnormally high due to a fill slope.
2. Sign supports shall not be spliced except where shown. Sign support posts shall not be spliced.
3. Aluminum sign blanks shall conform to Departmental Material Specifications DMS-7110 and shall have the following minimum thicknesses: 0.080 for signs less than 7.5 sq. ft., 0.100 for signs 7.5 to 15 sq. ft., and 0.125 for signs greater than 15 sq. ft.
4. Signs that require specific supports due to reasons in addition to windloading are indicated on the "REQUIRED SUPPORT" table on this sheet.
5. For horizontal rectangular signs fabricated from flat aluminum, T-brackets are used for signs 24 inches or less in height. U-brackets are used for signs of greater height.
6. When two triangular slipbase supports are used to support a single sign, they shall not be "rigidly" connected to each other except through the sign panel. This will allow each support to act independently when impacted by an errant vehicle.
7. Wing channel shall meet ASTM A 1011 SS Gr 50 and be galvanized per ASTM A 123.
8. Excess pipe, wing channel, or windbeam shall be cut off so that it does not extend beyond the sign panel (i.e., excess support shall not be visible when the sign is viewed from the front.) Repair galvanized coating at cut support ends per Item 445, "Galvanizing."
9. Additional route markers may be added vertically, provided the total sign area does not exceed the maximum allowable amount per Note 1.
10. Additional sign clamp required on the "T-bracket" post for 24 inch height signs. Place the clamp 3 inches above bottom of sign when possible.
11. Post open ends shall be fitted with Friction Caps.
12. Sign blanks shall be the sizes and shapes shown on the plans.

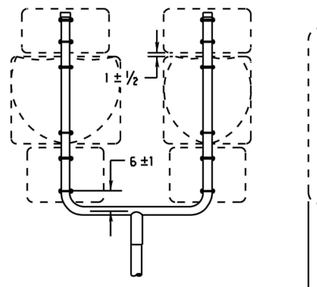


SM RD SGN ASSM TY XXXXX(1)XX(U)

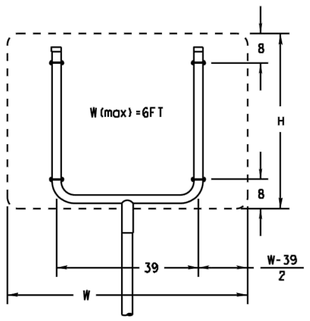


SM RD SGN ASSM TY XXXXX(1)XX(U)

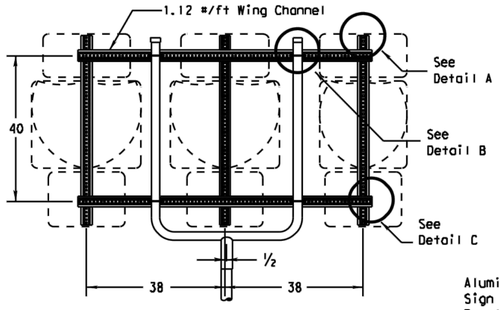


SM RD SGN ASSM TY XXXXX(1)XX(U-WC)
(See Note 11)

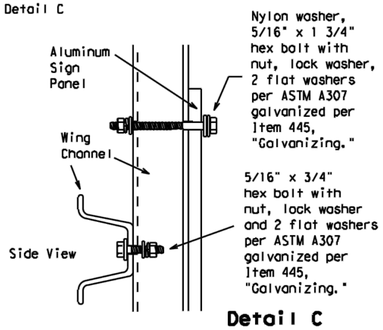


**SIDE VIEW**

**Detail C**

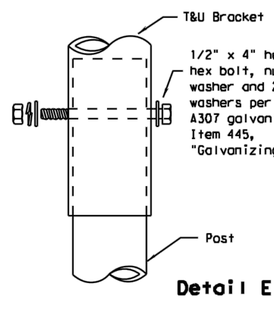


**Detail E**

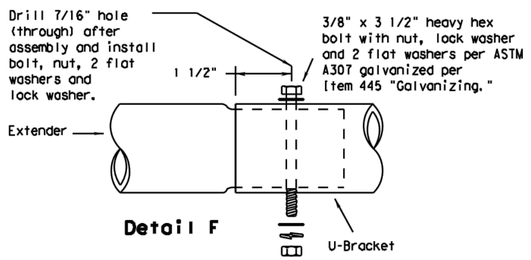


**Detail F**

Splices shall only be allowed behind the sign substrate.

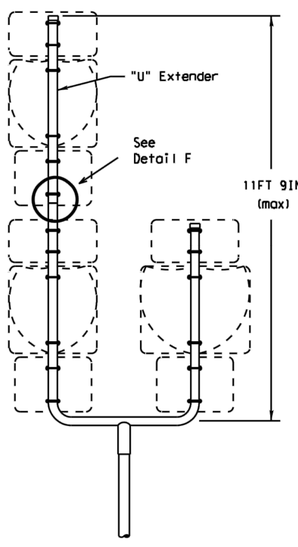


SM RD SGN ASSM TY S80(1)XX(U-1EXT)

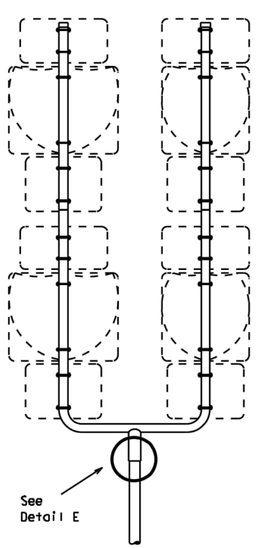


SM RD SGN ASSM TY S80(1)XX(U-2EXT)

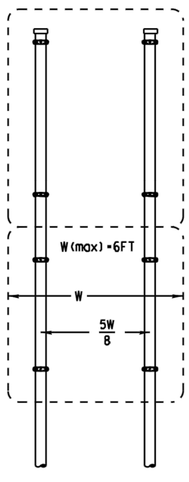


SM RD SGN ASSYM TY XXXXX(2)XX(P)

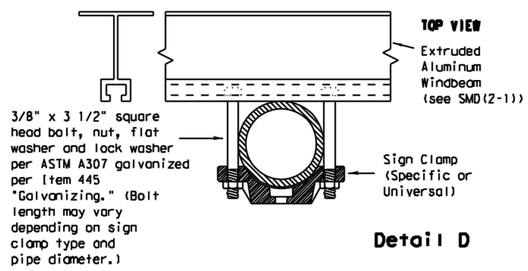


**Detail D**

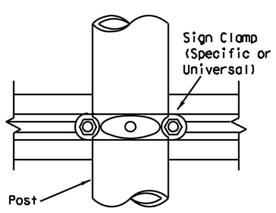


| REQUIRED SUPPORT | | |
|---|---|---|
| | SIGN DESCRIPTION | SUPPORT |
| Regulatory | 48-inch STOP sign (R1-1) | TY 10BWG(1)XX(T) TY 10BWG(1)XX(P-BM) |
| | 60-inch YIELD sign (R1-2) | TY 10BWG(1)XX(T) TY 10BWG(1)XX(P-BM) |
| | 48x16-inch ONE-WAY sign (R6-1) | TY 10BWG(1)XX(T) TY 10BWG(1)XX(P-BM) |
| | 36x48, 48x36, and 48x48-inch signs | TY 10BWG(1)XX(T) |
| | 48x60-inch signs | TY S80(1)XX(T) |
| Warning | 48x48-inch signs (diamond or square) | TY 10BWG(1)XX(T) |
| | 48x60-inch signs | TY S80(1)XX(T) |
| | 48-inch Advance School X-ing sign (S1-1) | TY 10BWG(1)XX(T) |
| | 48-inch School X-ing sign (S2-1) | TY 10BWG(1)XX(T) |
| | Large Arrow sign (W1-6 & W1-7) | TY 10BWG(1)XX(T) |

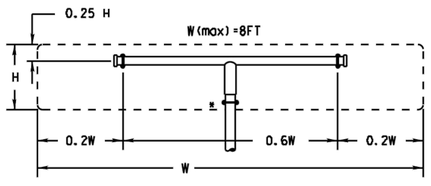


SM RD SGN ASSM TY XXXXX(1)XX(T)
(* - See Note 12)

All dimensions are in english unless detailed otherwise.

## FRICTION CAP DETAIL

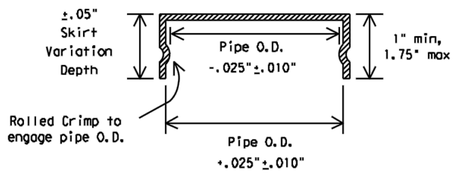


Friction caps may be manufactured from hot rolled or cold rolled steel sheets. The minimum sheet metal thickness shall be 24 gauge for all cap sizes.

The rim edges shall be reasonably straight and smooth. Caps shall be sized and formed in such a manner as to produce a drive-on friction fit and have no tendency to rock when seated on the pipe. The depth shall be sufficient to give positive protection against entrance of rainwater. They shall be free of sharp creases or indentations and show no evidence of metal fracture.

Caps shall have an electrodeposited coating of zinc in accordance with the requirements of ASTM B633 Class FE/ZN 8.

Texas Department of Transportation
Traffic Operations Division

# SIGN MOUNTING DETAILS SMALL ROADSIDE SIGNS TRIANGULAR SLIPBASE SYSTEM

## SMD(SLIP-2)-08

©TxDOT July 2002

| DN: TXDOT | CK: TXDOT | DW: TXDOT | CK: TXDOT |
|---|---|---|---|
| CONT | SECT | JOB | HIGHWAY |
| DIST | COUNTY | | SHEET NO. |

REVISIONS
9-08

DATE:
FILE:

DISCLAIMER: The use of this standard is governed by the "Texas Engineering Practice Act". No warranty of any kind is made by TxDOT for any purpose whatsoever. TxDOT assumes no responsibility for the conversion of this standard to other formats or for incorrect results or damages resulting from its use.

DATE:
FILE:

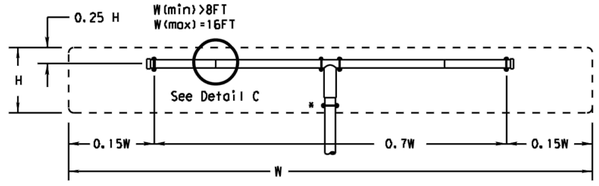


SM RD SGN ASSM TY XXXXX(1)XX(T-2EXT)
(* - See Note 12)

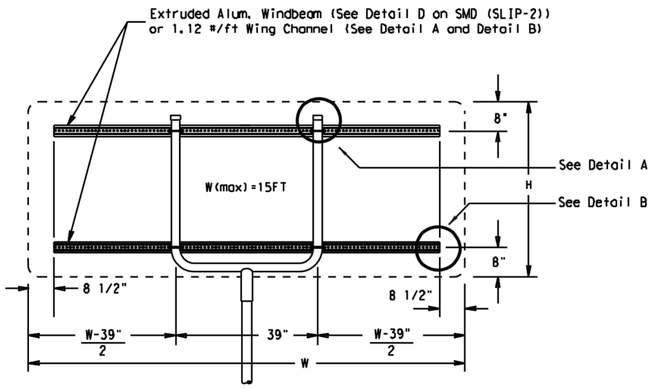


SM RD SGN ASSM TY XXXXX(1)XX(U-XX)

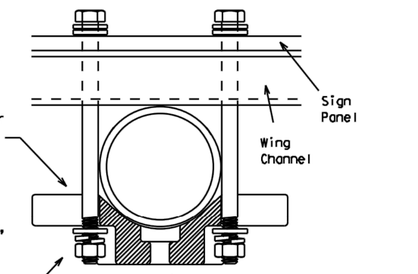


**Detail A**

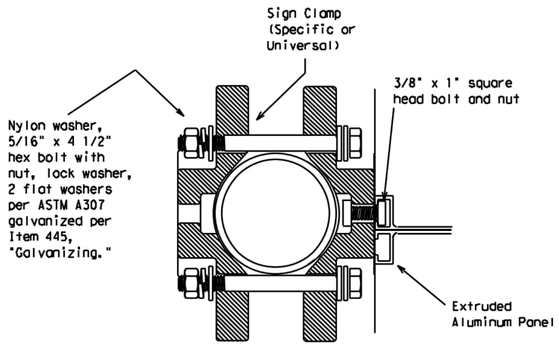


**Detail D**
**EXTRUDED ALUMINUM SIGN WITH T BRACKET**

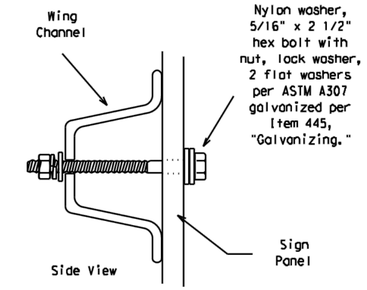


**Detail B**

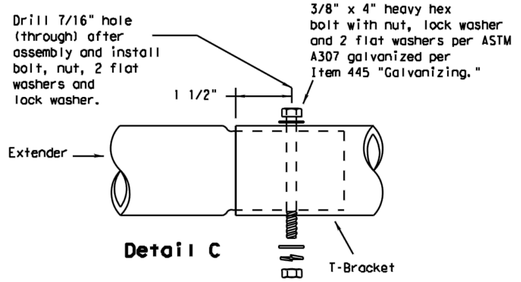


**Detail C**

Splices shall only be allowed behind the sign substrate.

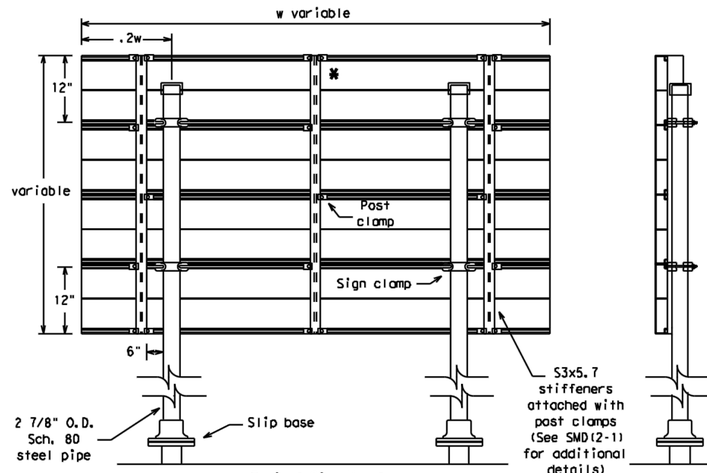


**Typical Sign Mount**

SM RD SGN ASSM TY S80(2)XX(P-EXAL)

* Additional stiffener placed at approximate center of signs when sign width is greater than 10'.

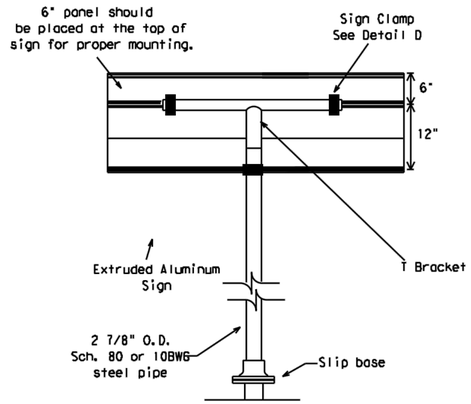


Extruded Aluminum Sign
With T Bracket

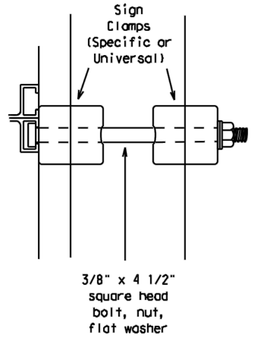


**Detail E**

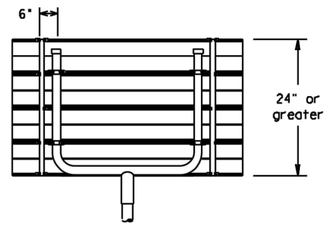


Use Extruded Alum. Windbeam as stiffeners
See SMD (2-1) for additional details

See Detail E
for clamp installation

**GENERAL NOTES:**

| SIGN SUPPORT | # OF POSTS | MAX. SIGN AREA |
|---|---|---|
| 10 BWG | 1 | 16 SF |
| 10 BWG | 2 | 32 SF |
| Sch 80 | 1 | 32 SF |
| Sch 80 | 2 | 64 SF |

1. The Engineer may require that a Schedule 80 post be used in place of a 10 BWG where a sign height is abnormally high due to a fill slope.
2. Sign supports shall not be spliced except where shown. Sign support posts shall not be spliced.
3. Aluminum sign blanks shall conform to Departmental Material Specifications DMS-7110 and shall have the following minimum thicknesses: 0.080 for signs less than 7.5 sq. ft., 0.100 for signs 7.5 to 15 sq. ft., and 0.125 for signs greater than 15 sq. ft.
4. Signs that require specific supports due to reasons in addition to windloading are indicated on the "REQUIRED SUPPORT" table on this sheet.
5. For horizontal rectangular signs fabricated from flat aluminum, T-brackets are used for signs 24 inches or less in height. U-brackets are used for signs of greater height.
6. When two triangular slipbase supports are used to support a single sign, they shall not be "rigidly" connected to each other except through the sign panel. This will allow each support to act independently when impacted by an errant vehicle.
7. Wing channel shall meet ASTM A 1011 SS Gr 50 and be galvanized per ASTM A 123.
8. Excess pipe, wing channel, or windbeam shall be cut off so that it does not extend beyond the sign panel (i.e., excess support shall not be visible when the sign is viewed from the front.) Repair galvanized coating at cut support ends per Item 445, "Galvanizing."
9. Sign blanks shall be the sizes and shapes shown on the plans.
10. Additional sign clamp required on the "T-bracket" post for 24 inch high signs. Place the clamp 3 inches above bottom of sign when possible.
11. Post open ends shall be fitted with Friction Caps.

**REQUIRED SUPPORT**

| | SIGN DESCRIPTION | SUPPORT |
|---|---|---|
| Regulatory | 48-inch STOP sign (R1-1) | TY 10BWG(1)XX(T)<br>TY 10BWG(1)XX(P-BM) |
| | 60-inch YIELD sign (R1-2) | TY 10BWG(1)XX(T)<br>TY 10BWG(1)XX(P-BM) |
| | 48x16-inch ONE-WAY sign (R6-1) | TY 10BWG(1)XX(T)<br>TY 10BWG(1)XX(P-BM) |
| | 36x48, 48x36, and 48x48-inch signs | TY 10BWG(1)XX(T) |
| | 48x60-inch signs | TY S80(1)XX(T) |
| Warning | 48x48-inch signs (diamond or square) | TY 10BWG(1)XX(T) |
| | 48x60-inch signs | TY S80(1)XX(T) |
| | 48-inch Advance School X-ing sign (S1-1) | TY 10BWG(1)XX(T) |
| | 48-inch School X-ing sign (S2-1) | TY 10BWG(1)XX(T) |
| | Large Arrow sign (W1-6 & W1-7) | TY 10BWG(1)XX(T) |

Texas Department of Transportation
Traffic Operations Division

# SIGN MOUNTING DETAILS
# SMALL ROADSIDE SIGNS
# TRIANGULAR SLIPBASE SYSTEM

## SMD(SLIP-3)-08

©TxDOT July 2002

| REVISIONS | DN: TXDOT | CK: TXDOT | DW: TXDOT | CK: TXDOT |
|---|---|---|---|---|
| 9-08 | CONT | SECT | JOB | HIGHWAY |
| | DIST | COUNTY | | SHEET NO. |

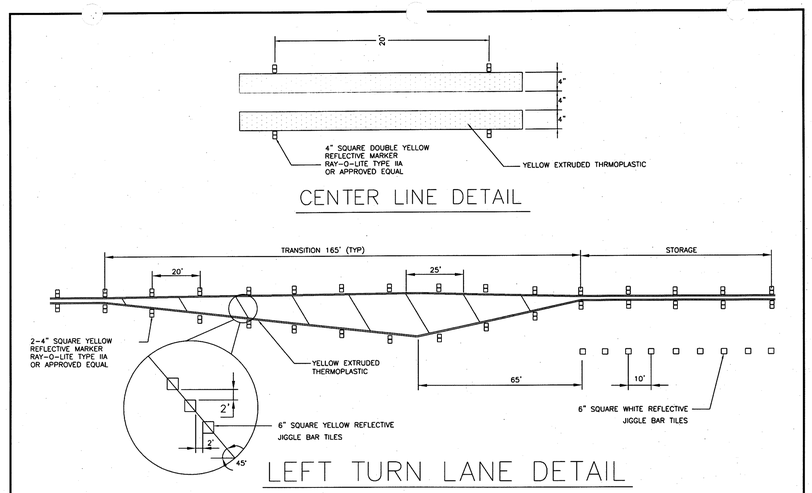


| | | | |
|---|---|---|---|
| CENTERLANE MARKERS & BUTTONS | | REPLACING N.C.T.C.O.G. DWG. NAME: | 2010 |
| | | SCALE: N.T.S. | DRAWN BY: BSJ |
| | | DATE: August 2008 | APPROVED BY: DID |
| TRAFFIC | LANE MARKERS | FARMERS BRANCH | F.B. DWG. NAME: FB-T-1210.DWG |

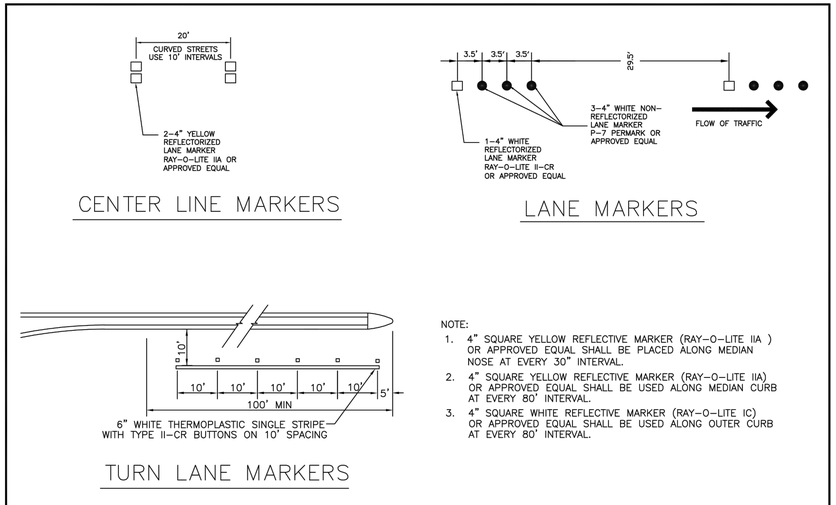


NOTE:
1. 4" SQUARE YELLOW REFLECTIVE MARKER (RAY-O-LITE IIA ) OR APPROVED EQUAL SHALL BE PLACED ALONG MEDIAN NOSE AT EVERY 30" INTERVAL.
2. 4" SQUARE YELLOW REFLECTIVE MARKER (RAY-O-LITE IIA) OR APPROVED EQUAL SHALL BE USED ALONG MEDIAN CURB AT EVERY 80' INTERVAL.
3. 4" SQUARE WHITE REFLECTIVE MARKER (RAY-O-LITE IC) OR APPROVED EQUAL SHALL BE USED ALONG OUTER CURB AT EVERY 80' INTERVAL.

| | | | |
|---|---|---|---|
| BUTTONS | | REPLACING N.C.T.C.O.G. DWG. NAME: | 2020 |
| | | SCALE: N.T.S. | DRAWN BY: BSJ |
| | | DATE: October 2018 | APPROVED BY: DID |
| TRAFFIC | LANE MARKERS | FARMERS BRANCH | F.B. DWG. NAME: FB-T-1220.DWG |

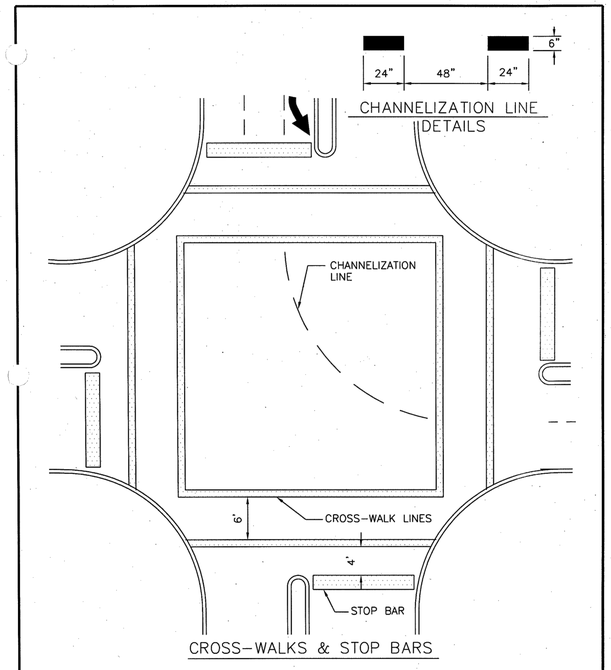


| | | | |
|---|---|---|---|
| CROSS WALK/STOP BARS | | REPLACING N.C.T.C.O.G. DWG. NAME: | |
| | | SCALE: N.T.S. | DRAWN BY: BSJ |
| | | DATE: August 2008 | APPROVED BY: DID |
| TRAFFIC | MARKINGS | FARMERS BRANCH | F.B. DWG. NAME: FB-T-1230A.DWG |

NOTES:
1. LANE DIRECTION ARROWS SHALL BE (90 MIL. MIN.) EXTRUDED THERMOPLASTIC.
2. STOP BARS SHALL BE 24" WIDE (90 MIL. MIN.) EXTRUDED THERMOPLASTIC.
3. CROSS-WALKS SHALL BE 12" WIDE (90 MIL. MIN.) EXTRUDED THERMOPLASTIC.
4. CHANNELIZATION LINES SHAL BE 6" WIDE (90 MIL. MIN.) EXTRUDED THERMOPLASTIC.
5. ALL MARKINGS SHALL BE INSTALLED PER MUTCD SPECIFICATIONS.
6. THE AREA WHERE NEW STOP BARS OR CROSSWALK MATERIAL IS TO BE APPLIED MUST HAVE THE SURFACE SCUFFED WITH GRINDER AND SWEPT CLEAN TO MEET MANUFACTUREER'S RECOMMENDATION. ALL MATERIAL MANURACTURER'S RECOMMENDATION FOR APPLICATION MUST BE FOLLOWED.

| | | | |
|---|---|---|---|
| PERMANENT MARKING NOTES | | REPLACING N.C.T.C.O.G. DWG. NAME: | |
| | | SCALE: N.T.S. | DRAWN BY: BSJ |
| | | DATE: August 2008 | APPROVED BY: DID |
| TRAFFIC | MARKINGS | FARMERS BRANCH | F.B. DWG. NAME: FB-T-1230B.DWG |

811 Know what's **below.** **Call** before you dig.

| No. | REVISIONS | DATE | BY |
|---|---|---|---|
| | | | |

PROJECT NO. 2021-01C/ BID NO. 21-69

Kimley»Horn
2201 WEST ROYAL LANE, SUITE 275, IRVING, TX 75063
PHONE: 214-420-5600
WWW.KIMLEY-HORN.COM
© 2021 KIMLEY-HORN AND ASSOCIATES, INC.
TEXAS REGISTERED ENGINEERING FIRM #F-928

9/10/2021




| KHA PROJECT 063543031 | DATE 09/10/2021 | SCALE AS SHOWN | DESIGNED BY RMD |
|---|---|---|---|
| | | DRAWN BY CDS | CHECKED BY LNA |

**TOWN OF ADDISON**
ALPHA ROAD CONN.
FROM FARMERS BRANCH CREEK TO ALPHA ROAD

PAVING
STANDARD DETAILS
CITY OF FARMERS BRANCH

SHEET NUMBER
C6.15

Plotted By:Shotbolt, Cody September 08, 2021 09:15:24am K:\LAC_Civil\063543031_Addison_Alpha_Road_Connector\CADD\PlanSheets\Paving Details.dwg
This document, together with the concepts and designs presented herein, as an instrument of service, is intended only for the specific purpose and client for which it was prepared. Reuse of and improper reliance on this document without written authorization and adaptation by Kimley-Horn and Associates, Inc. shall be without liability to Kimley-Horn and Associates, Inc.

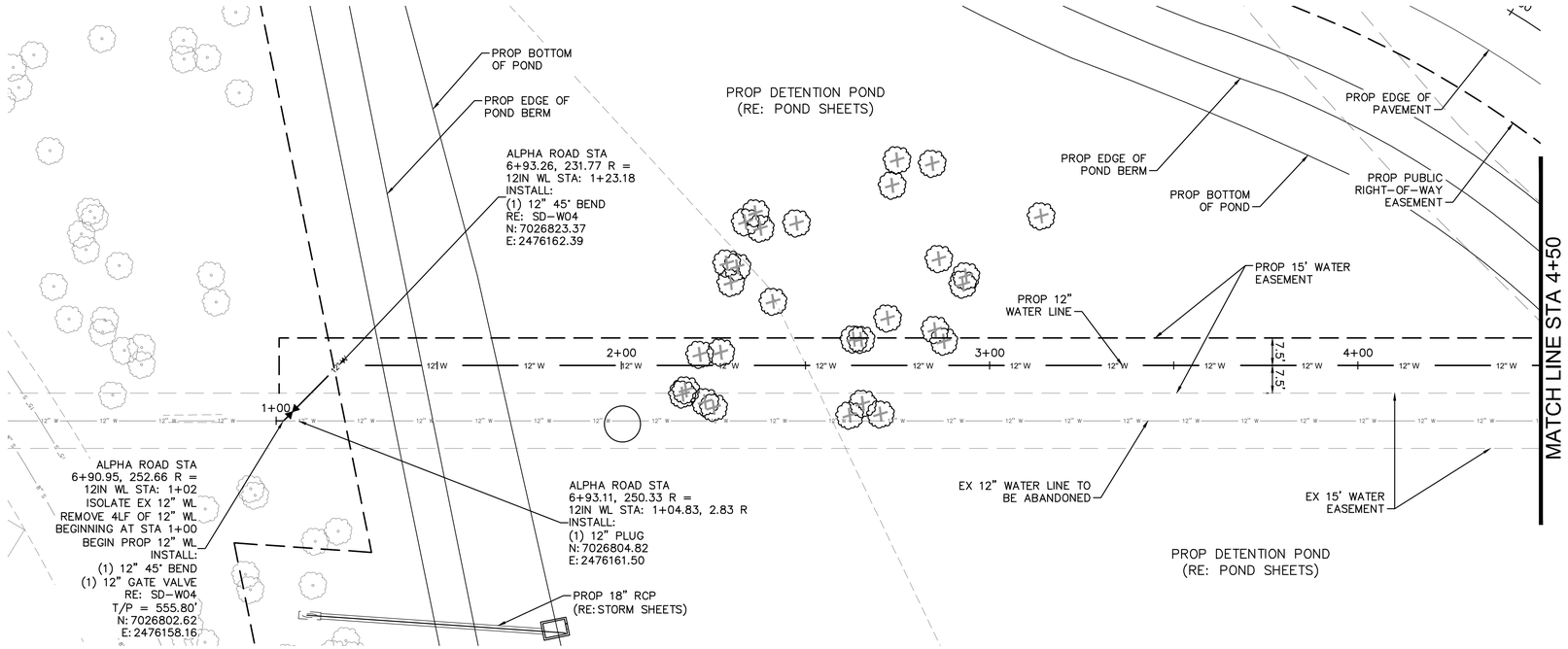


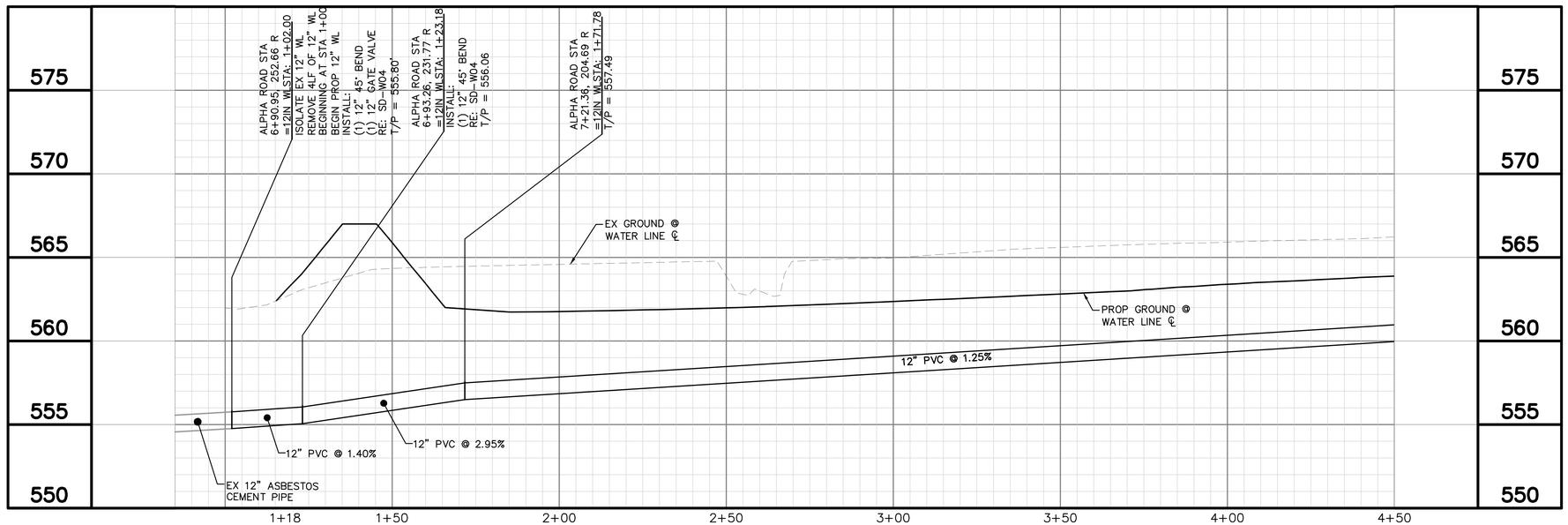


GRAPHIC SCALE IN FEET
0 10 20 40

NORTH

## UTILITY LEGEND

- PROPERTY LINE
- PROP WATER LINE
- PROP SANITARY SEWER LINE
- PROP WATER VALVE
- PROP FIRE HYDRANT
- PROP SANITARY SEWER MANHOLE
- EX GAS LINE
- EX UNDERGROUND TELEPHONE
- EX UNDERGROUND ELECTRIC
- EX OVERHEAD POWER LINE
- EX WATER LINE
- EX SANITARY SEWER LINE
- EX STORM SEWER LINE
- EX POWER POLE
- EX FIRE HYDRANT
- EX WATER VALVE
- EX SANITARY SEWER MANHOLE

WATER GENERAL NOTES:

1. FIRE HYDRANTS, VALVES, FITTINGS, ETC. SHOWN AS A GRAPHICAL REPRESENTATION ONLY. CONTRACTOR TO LOCATE AND CONSTRUCT THESE IMPROVEMENTS BASED ON THE CURRENT TOWN/CITY/JURISDICTIONAL DESIGN STANDARDS AND DETAILS. CONTRACTOR TO NOTIFY ENGINEER IF ANY DISCREPANCIES ARE DISCOVERED PRIOR TO BEGINNING CONSTRUCTION.
2. CONTRACTOR TO FIELD VERIFY LOCATION OF EXISTING UTILITIES PRIOR TO CONSTRUCTION.
3. FIRE HYDRANT ASSEMBLY INCLUDES ALL FITTINGS, TEES AND VALVES.
4. VALVE DISTANCES AND LOCATION AND APPROXIMATE AND ARE PROVIDED TO ASSIST DEWATERING VOLUME ESTIMATES. NO ADDITIONAL PAYMENT WILL BE MADE IF FIELD CONDITION VARY.
5. TOWN OF ADDISON/CITY OF FARMERS BRANCH STAFF WILL OPERATE ALL EXISTING VALVES.

!!WARNING!!

EXISTING UTILITIES IN THE AREA. CONTRACTOR SHALL FIELD VERIFY THE LOCATION OF ALL EXISTING UTILITIES WITH THE PROVIDER PRIOR TO START OF CONSTRUCTION AND SHALL IMMEDIATELY NOTIFY THE ENGINEER OF ANY CONFLICTS DISCOVERED. CONTRACTOR IS RESPONSIBLE FOR COORDINATING UTILITY RELOCATION WHERE NECESSARY AND PROTECTING EXISTING UTILITIES (SHOWN OR NOT SHOWN). IF ANY EXISTING UTILITIES ARE DAMAGED, THE CONTRACTOR SHALL REPLACE THEM AT THEIR OWN EXPENSE.

811 Know what's **below.** **Call** before you dig.

| No. | REVISIONS | DATE | BY |
|---|---|---|---|
| | | | |

PROJECT NO. 2021-01C/ BID NO. 21-69


Kimley»Horn
2201 WEST ROYAL LANE, SUITE 275, IRVING, TX 75063
PHONE: 214-420-5600
WWW.KIMLEY-HORN.COM


© 2021 KIMLEY-HORN AND ASSOCIATES, INC.

TEXAS REGISTERED ENGINEERING FIRM #F-928

9/10/2021

STATE OF TEXAS
RYAN DELMOTTE
114242
LICENSED
PROFESSIONAL ENGINEER

| | |
|---|---|
| KHA PROJECT | 063543031 |
| DATE | 09/10/2021 |
| SCALE | AS SHOWN |
| DESIGNED BY | RMD |
| DRAWN BY | CDS |
| CHECKED BY | LNA |

# TOWN OF ADDISON
## ALPHA ROAD CONN.
## FROM FARMERS BRANCH CREEK TO ALPHA ROAD

# WATER LINE
## PLAN & PROFILE
## ALPHA ROAD CONNECTOR
## BEGIN TO STA 4+50

SHEET NUMBER
C7.01


Plotted By: Shettich, Cody - September 08, 2021 - 09:17:05am - K:\NAC-Civil\063543031-Addison-Alpha-Royal Connector\04-01\Plan-Sheets\Water Plan.dwg
This document, together with the concepts and designs presented herein, as an instrument of service is intended only for the specific purpose and client for which it was prepared. Reuse of and improper reliance on this document without written authorization and adaptation by Kimley-Horn and Associates, Inc. shall be without liability to Kimley-Horn and Associates, Inc.

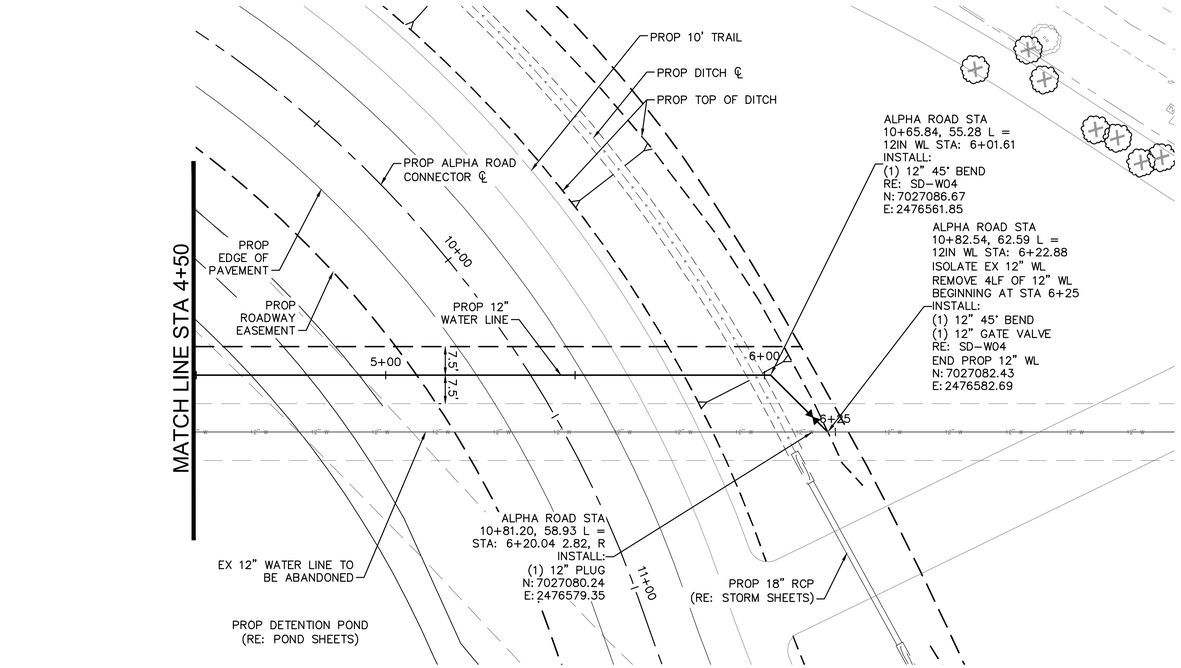


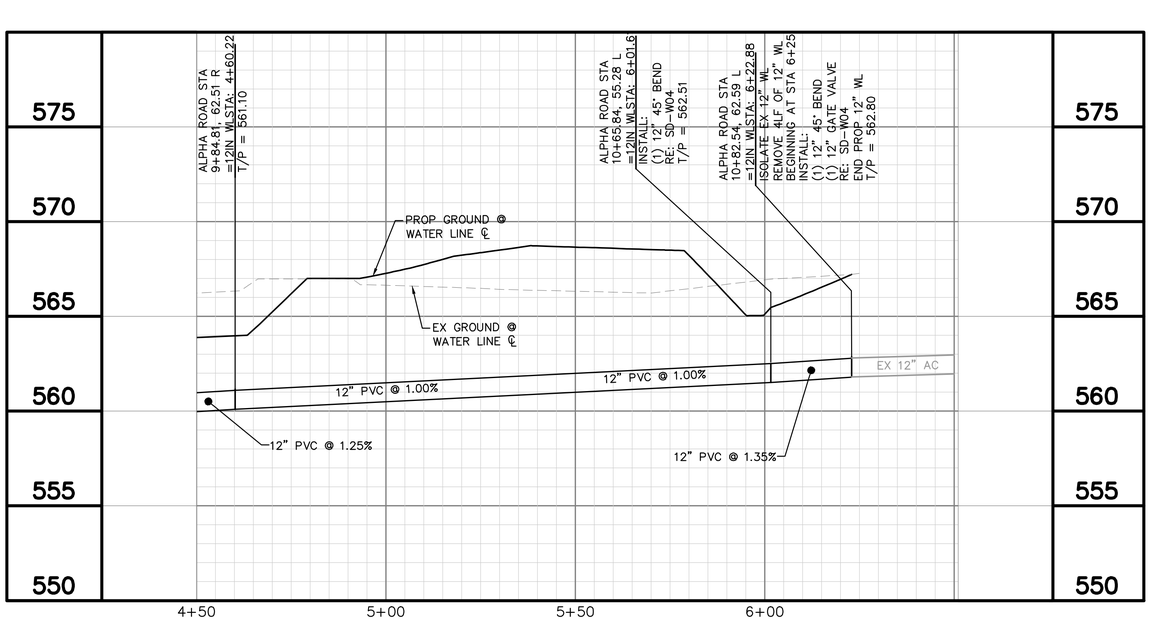


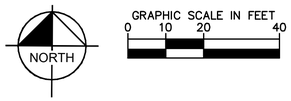


## UTILITY LEGEND

- PROPERTY LINE
- PROP WATER LINE
- PROP SANITARY SEWER LINE
- PROP WATER VALVE
- PROP FIRE HYDRANT
- PROP SANITARY SEWER MANHOLE
- EX GAS LINE
- EX UNDERGROUND TELEPHONE
- EX UNDERGROUND ELECTRIC
- EX OVERHEAD POWER LINE
- EX WATER LINE
- EX SANITARY SEWER LINE
- EX STORM SEWER LINE
- EX POWER POLE
- EX FIRE HYDRANT
- EX WATER VALVE
- EX SANITARY SEWER MANHOLE

WATER GENERAL NOTES:

1. FIRE HYDRANTS, VALVES, FITTINGS, ETC. SHOWN AS A GRAPHICAL REPRESENTATION ONLY. CONTRACTOR TO LOCATE AND CONSTRUCT THESE IMPROVEMENTS BASED ON THE CURRENT TOWN/CITY/JURISDICTIONAL DESIGN STANDARDS AND DETAILS. CONTRACTOR TO NOTIFY ENGINEER IF ANY DISCREPANCIES ARE DISCOVERED PRIOR TO BEGINNING CONSTRUCTION.
2. CONTRACTOR TO FIELD VERIFY LOCATION OF EXISTING UTILITIES PRIOR TO CONSTRUCTION.
3. FIRE HYDRANT ASSEMBLY INCLUDES ALL FITTINGS, TEES AND VALVES.
4. VALVE DISTANCES AND LOCATION AND APPROXIMATE AND ARE PROVIDED TO ASSIST DEWATERING VOLUME ESTIMATES. NO ADDITIONAL PAYMENT WILL BE MADE IF FIELD CONDITION VARY.
5. TOWN OF ADDISON/CITY OF FARMERS BRANCH STAFF WILL OPERATE ALL EXISTING VALVES.

!!WARNING!!

EXISTING UTILITIES IN THE AREA. CONTRACTOR SHALL FIELD VERIFY THE LOCATION OF ALL EXISTING UTILITIES WITH THE PROVIDER PRIOR TO START OF CONSTRUCTION AND SHALL IMMEDIATELY NOTIFY THE ENGINEER OF ANY CONFLICTS DISCOVERED. CONTRACTOR IS RESPONSIBLE FOR COORDINATING UTILITY RELOCATION WHERE NECESSARY AND PROTECTING EXISTING UTILITIES (SHOWN OR NOT SHOWN). IF ANY EXISTING UTILITIES ARE DAMAGED, THE CONTRACTOR SHALL REPLACE THEM AT THEIR OWN EXPENSE.

811 Know what's **below.** **Call** before you dig.

| No. | REVISIONS | DATE | BY |
|---|---|---|---|

PROJECT NO. 2021-01C/ BID NO. 21-69


Kimley»Horn
2201 WEST ROYAL LANE, SUITE 275, IRVING, TX 75063
PHONE: 214-420-5600
WWW.KIMLEY-HORN.COM


© 2021 KIMLEY-HORN AND ASSOCIATES, INC.


TEXAS REGISTERED ENGINEERING FIRM #F-928


9/10/2021

STATE OF TEXAS
RYAN DELMOTTE
114242
LICENSED
PROFESSIONAL ENGINEER

| KHA PROJECT 063543031 | | |
|---|---|---|
| DATE | 09/10/2021 | |
| SCALE | AS SHOWN | |
| DESIGNED BY | RMD | |
| DRAWN BY | CDS | |
| CHECKED BY | LNA | |

# TOWN OF ADDISON
ALPHA ROAD CONN.
FROM FARMERS BRANCH
CREEK TO ALPHA ROAD

## WATER LINE
PLAN & PROFILE
ALPHA ROAD CONNECTOR
STA 4+50 TO END

SHEET NUMBER
C7.02


Plotted By: Shethshi, Cody September 08, 2021 09:17:10pm - K:\NAC_Civil\063543031-Addison_Alpha_Road_Connector\04CD\Plan\Sheets\Water Plan.dwg
This document, together with the concepts and designs presented herein, as an instrument of service is intended only for the specific purpose and client for which it was prepared. Reuse of and improper reliance on this document without written authorization and adaptation by Kimley-Horn and Associates, Inc. shall be without liability to Kimley-Horn and Associates, Inc.

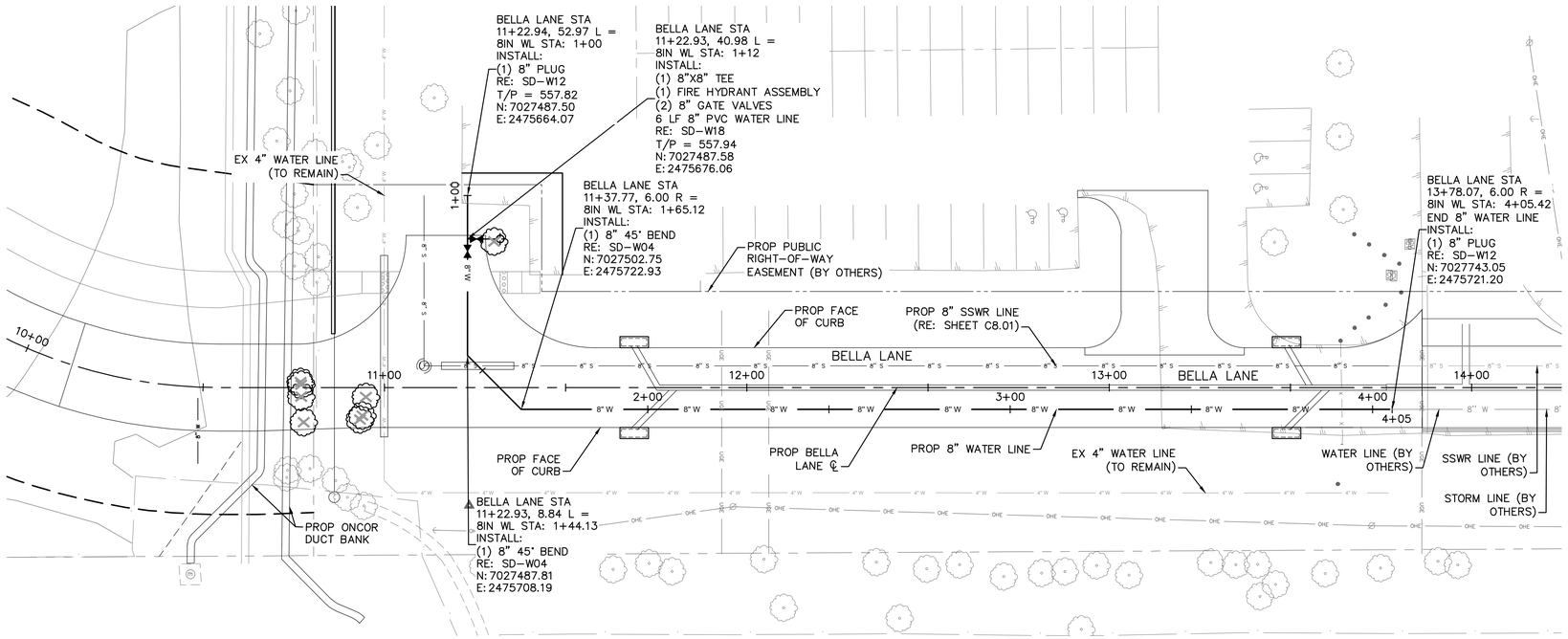


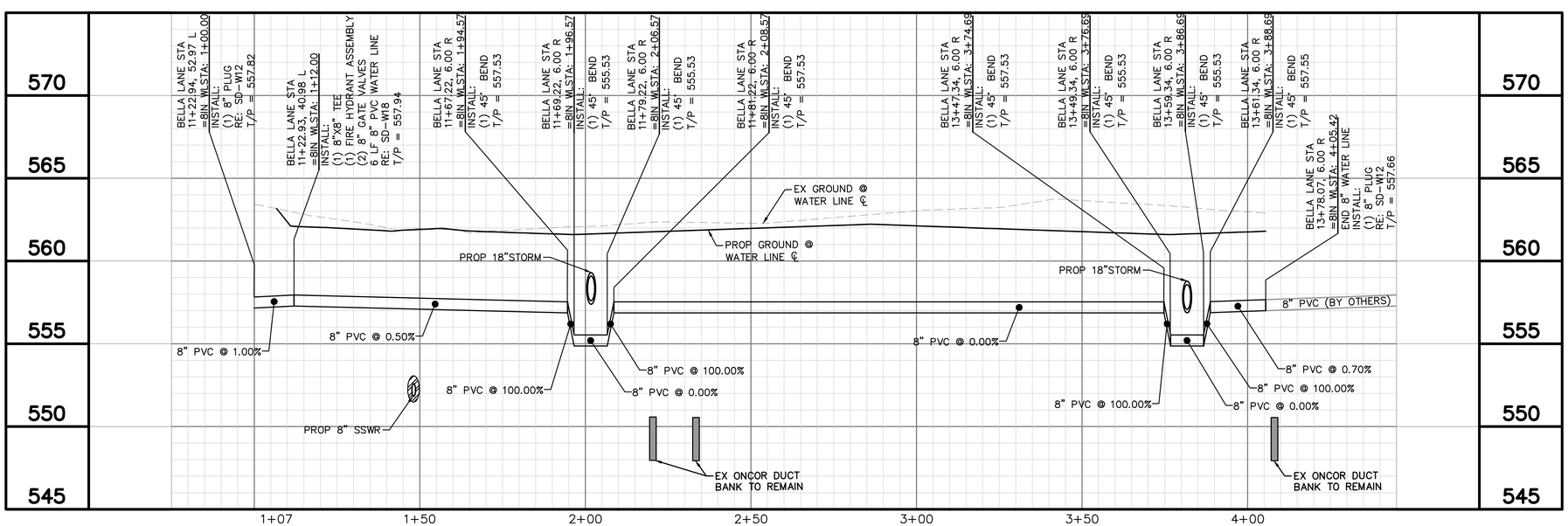





GRAPHIC SCALE IN FEET
0 10 20 40

## UTILITY LEGEND

- PROPERTY LINE
- PROP WATER LINE
- PROP SANITARY SEWER LINE
- PROP WATER VALVE
- PROP FIRE HYDRANT
- PROP SANITARY SEWER MANHOLE
- EX GAS LINE
- EX UNDERGROUND TELEPHONE
- EX UNDERGROUND ELECTRIC
- EX OVERHEAD POWER LINE
- EX WATER LINE
- EX SANITARY SEWER LINE
- EX STORM SEWER LINE
- EX POWER POLE
- EX FIRE HYDRANT
- EX WATER VALVE
- EX SANITARY SEWER MANHOLE

WATER GENERAL NOTES:

1. FIRE HYDRANTS, VALVES, FITTINGS, ETC. SHOWN AS A GRAPHICAL REPRESENTATION ONLY. CONTRACTOR TO LOCATE AND CONSTRUCT THESE IMPROVEMENTS BASED ON THE CURRENT TOWN/CITY/JURISDICTIONAL DESIGN STANDARDS AND DETAILS. CONTRACTOR TO NOTIFY ENGINEER IF ANY DISCREPANCIES ARE DISCOVERED PRIOR TO BEGINNING CONSTRUCTION.
2. CONTRACTOR TO FIELD VERIFY LOCATION OF EXISTING UTILITIES PRIOR TO CONSTRUCTION.
3. FIRE HYDRANT ASSEMBLY INCLUDES ALL FITTINGS, TEES AND VALVES.
4. VALVE DISTANCES AND LOCATION AND APPROXIMATE AND ARE PROVIDED TO ASSIST DEWATERING VOLUME ESTIMATES. NO ADDITIONAL PAYMENT WILL BE MADE IF FIELD CONDITION VARY.
5. TOWN OF ADDISON/CITY OF FARMERS BRANCH STAFF WILL OPERATE ALL EXISTING VALVES.

!!WARNING!!

EXISTING UTILITIES IN THE AREA. CONTRACTOR SHALL FIELD VERIFY THE LOCATION OF ALL EXISTING UTILITIES WITH THE PROVIDER PRIOR TO START OF CONSTRUCTION AND SHALL IMMEDIATELY NOTIFY THE ENGINEER OF ANY CONFLICTS DISCOVERED. CONTRACTOR IS RESPONSIBLE FOR COORDINATING UTILITY RELOCATION WHERE NECESSARY AND PROTECTING EXISTING UTILITIES (SHOWN OR NOT SHOWN). IF ANY EXISTING UTILITIES ARE DAMAGED, THE CONTRACTOR SHALL REPLACE THEM AT THEIR OWN EXPENSE.

811 Know what's **below.** **Call** before you dig.

| No. | REVISIONS | DATE | BY |
|---|---|---|---|
| | | | |

PROJECT NO. 2021-01C/ BID NO. 21-69

Kimley»Horn
2201 WEST ROYAL LANE, SUITE 275, IRVING, TX 75063
PHONE: 214-420-5600
WWW.KIMLEY-HORN.COM
© 2021 KIMLEY-HORN AND ASSOCIATES, INC.
TEXAS REGISTERED ENGINEERING FIRM #F-928

9/10/2021

STATE OF TEXAS
RYAN DELMOTTE
114242
LICENSED
PROFESSIONAL ENGINEER

KHA PROJECT 063543031
DATE 09/10/2021
SCALE AS SHOWN
DESIGNED BY RMD
DRAWN BY CDS
CHECKED BY LNA

# TOWN OF ADDISON
## ALPHA ROAD CONN.
## FROM FARMERS BRANCH CREEK TO ALPHA ROAD

# WATER LINE
## PLAN & PROFILE
## BELLA LANE

SHEET NUMBER
C7.03

Plotted By: Shethshi, Cody September 09, 2021 01:45:59pm K:\NAC_Civil\063543031-Addison-Alpha-Rdy\Connectn\Cad\01\Plan-Sheet\Water Plan.dwg
This document, together with the concepts and designs presented herein, as an instrument of service is intended only for the specific purpose and client for which it was prepared. Reuse of and improper reliance on this document without written authorization and adaptation by Kimley-Horn and Associates, Inc. shall be without liability to Kimley-Horn and Associates, Inc.

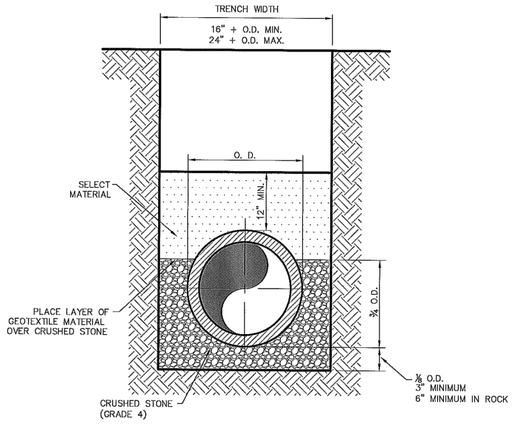


CLASS "B+" EMBEDMENT

CRUSHED STONE SHALL BE 3/4", PASSING # 4 SIEVE

TYPICAL P.V.C. WATER MAIN EMBEDMENT

Addison!
PUBLIC WORKS DEPARTMENT

P.V.C. WATER MAIN EMBEDMENT

STANDARD CONSTRUCTION DETAILS WATER

| DATE: | REV DATE: | SHEET : |
|---|---|---|
| AUGUST, 2010 | – | SD-W01 |

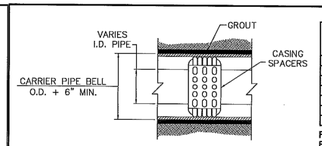


TYPICAL CASING SECTION

| CARRIER PIPE SIZE (IN) | STEEL ENCASEMENT O.D. (IN) | STEEL ENCASEMENT WALL THICKNESS (IN) |
|---|---|---|
| 6 | 14 | 1/4 |
| 8 | 16 | 1/4 |
| 12 | 21 | 1/4 |
| 18 | 27 | 3/8 |
| 21 | 30 | 3/8 |
| 24 | 36 | 3/8 |
| 27 | 39 | 1/2 |

FOR ALL CARRIER PIPES OVER 27": THE STEEL ENCASEMENT PIPE SHALL BE 12" LARGER THAN THE CARRIER PIPE AND THE STEEL ENCASEMENT WALL THICKNESS SHALL BE 1/2".

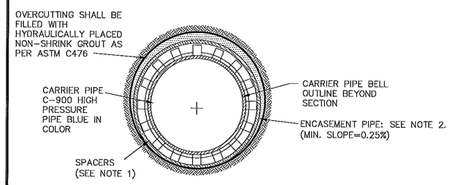


WATER MAIN ENCASEMENT

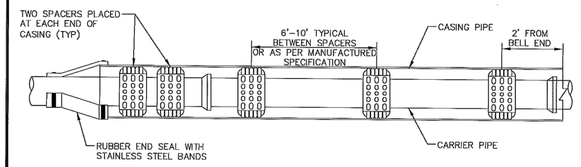


INSULATOR SPACING DETAIL

NOTES:

1. HIGH DENSITY POLYETHYLENE SPACERS, RACI OR EQUAL, SHALL BE USED. WHERE NO CASING PIPE IS REQUIRED OVERCUTTING AROUND UTILITY SHALL BE FILLED WITH HYDRAULICALLY PLACED NON-SHRINK GROUT AS PER ASTM C476.
2. ENCASEMENT PIPE SHALL BE HIGH DENSITY STEEL PIPE. ALL JOINTS TO BE WELDED 100%.

Addison!
DEPARTMENT OF PUBLIC WORKS

CASING

STANDARD CONSTRUCTION DETAILS WATER

| DATE: | REV DATE: | SHEET : |
|---|---|---|
| AUGUST, 2010 | – | SD-W03 |

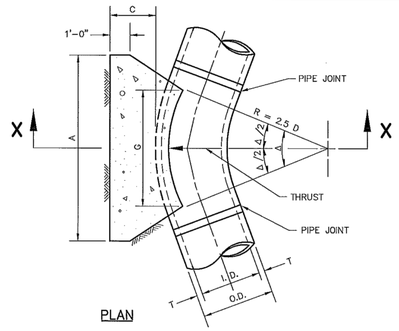


PLAN

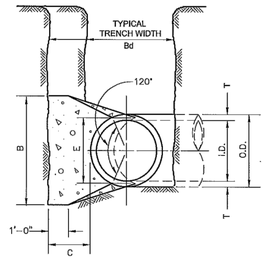


SECTION X-X

Addison!
PUBLIC WORKS DEPARTMENT

HORIZONTAL THRUST BLOCK AT PIPE BEND

STANDARD CONSTRUCTION DETAILS WATER

| DATE: | REV DATE: | SHEET : |
|---|---|---|
| AUGUST, 2010 | – | SD-W04 |

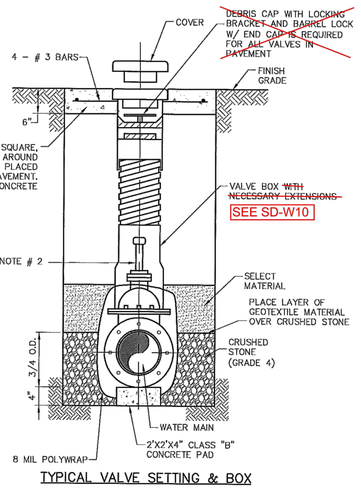


TYPICAL VALVE SETTING & BOX

NOTE:

1. 4"-12" R.S. GATE VALVES SHALL BE IN ACCORDANCE WITH TOWN OF ADDISON WATER SYSTEM REQUIREMENTS.
2. A PERMANENTLY ATTACHED VALVE EXTENSION STEM SHALL BE REQUIRED FOR ANY VALVE WHERE THE OPERATING NUT IS LOCATED IN EXCESS OF 5 FEET BELOW THE TOP OF VALVE BOX. THIS EXTENSION SHALL BE OF SUFFICIENT LENGTH TO INSURE THAT ITS TOP IS WITHIN 5 FEET OF VALVE BOX LID.
3. BLUE "V" (3") CUT INTO FACE OF NEAREST CURB AND POINTING TOWARD THE VALVE.
4. ALL IRON MATERIALS SHALL BE DOMESTIC. (MADE IN USA)
5. CRUSHED STONE SHALL BE 3/4", PASSING #4 SIEVE.

Addison!
PUBLIC WORKS DEPARTMENT

VALVE SETTING ~~BOX~~

STANDARD CONSTRUCTION DETAILS WATER

| DATE: | REV DATE: | SHEET : |
|---|---|---|
| AUGUST, 2010 | 04/06/17 | SD-W09 |

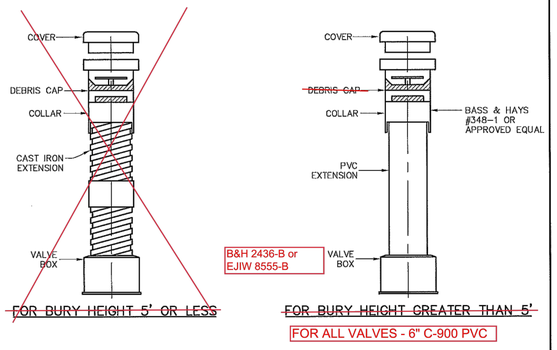


NOTE

1. ALL CAST IRON FITTINGS SHALL BE DOMESTIC. (MADE IN U.S.A.)
2. ~~VALVE BOXES SHALL BE PROVIED FOR BURIED VALVES. THESE BOXES SHALL BE THREE (3) PIECE SCREW TYPE CAST IRON OF THE EXTENSION TYPE AND SHALL BE: BASS & HAYS THREE (3) PIECE ADJUSTABLE SCREW TYPE, EAST JORDAN IRON WORKS 8500 W/ 8600 LID, MUELLER NO. H-10360 OR APPROVED EQUAL. THE THREE (3) PIECES SHALL CONSIST OF THE TOP SECTION, BOTTOM SECTION AND COVER.~~

Addison!
PUBLIC WORKS DEPARTMENT

VALVE BOX WITH EXTENSION

STANDARD CONSTRUCTION DETAILS WATER

| DATE: | REV DATE: | SHEET : |
|---|---|---|
| ~~AUGUST, 2010~~ JANUARY 2017 | – | SD-W10 |

NOTE:

1. DESIGN, SITE REQUIREMENTS, THE GENERAL OPERATION, PAINTING AND DELIVERY OF ALL FIRE HYDRANTS SHALL BE IN ACCORDANCE WITH THE TOWN OF ADDISON WATER SYSTEM REQUIREMENTS.
2. FIRE HYDRANTS SHALL BE LOCATED A MINIMUM OF 18" OUTSIDE OF THE AREA BETWEEN THE P.C.'S OF THE CORNER TURNING RADIUS AT INTERSECTIONS AND DRIVEWAYS (SEE PLAN VIEW).

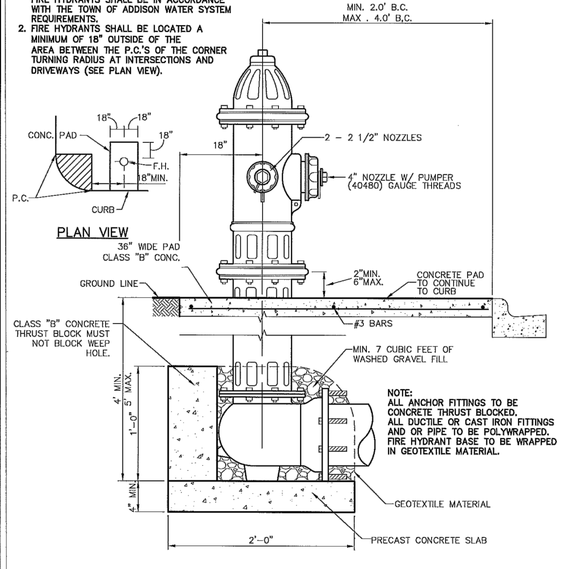


TYPICAL FIRE HYDRANT INSTALLATION

Addison!
PUBLIC WORKS DEPARTMENT

TYPICAL FIRE HYDRANT INSTALLATION

STANDARD CONSTRUCTION DETAILS WATER

| DATE: | REV DATE: | SHEET : |
|---|---|---|
| AUGUST, 2010 | – | SD-W16 |

Know what's **below.**
**Call** before you dig.

| No. | REVISIONS | DATE | BY |
|---|---|---|---|
| | | | |

PROJECT NO. 2021-01C/ BID NO. 21-69


Kimley»Horn
2201 WEST ROYAL LANE, SUITE 275, IRVING, TX 75063
PHONE: 214-420-5600
WWW.KIMLEY-HORN.COM


© 2021 KIMLEY-HORN AND ASSOCIATES, INC.

TEXAS REGISTERED ENGINEERING FIRM #F-928

9/10/2021

STATE OF TEXAS
RYAN DELMOTTE
114242
LICENSED PROFESSIONAL ENGINEER

| KHA PROJECT 063543031 | DATE 09/10/2021 | SCALE AS SHOWN | DESIGNED BY RMD | DRAWN BY CDS | CHECKED BY LNA |
|---|---|---|---|---|---|

**TOWN OF ADDISON**
ALPHA ROAD CONN.
FROM FARMERS BRANCH CREEK TO ALPHA ROAD

WATER LINE
STANDARD DETAILS
SHEET 1 OF 2
TOWN OF ADDISON

SHEET NUMBER
C7.04


Plotted By: Shadbolt, Cody September 08, 2021 09:17:27am K:\AC_Civil\063543031_Addison_Alpha_Road_Connector\CADD\PlanSheets\WATER_DETAILS.dwg
The concepts and designs presented herein, as an instrument of service, is intended only for the specific purpose and client for which it was prepared. Reuse of and improper reliance on this document without written authorization and adaptation by Kimley-Horn and Associates, Inc. shall be without liability to Kimley-Horn and Associates, Inc.

NOTE
6"ø STEEL PIPE W/CONCRETE FILL 6' LENGTH (3' ABOVE PAVING, 3' BELOW PAVING) WITH 1-#4X5'-6" TO BE CASED IN 18"ø PIER TO DEPTH OF 1'-0" BELOW BOTTOM OF PIPE. USE 2-#6x12" REBAR THRU PIPE INTO CONCRETE PIER. PIPES TO BE PAINTED TRAFFIC YELLOW W/ 6" WHITE RELECTOR TAPE.

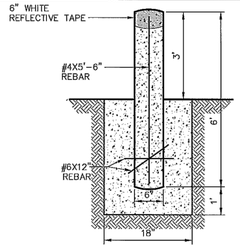


GUARD POST SECTION

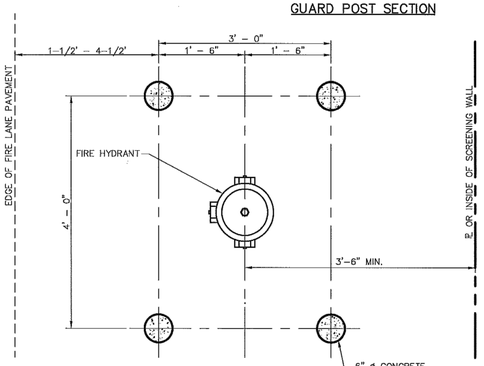


NOTE:
FOR USE ONLY WHERE CURBS ARE NOT POSSIBLE.

FIRE HYDRANT GUARD POST DETAIL

| Addison!. PUBLIC WORKS DEPARTMENT | FIRE HYDRANT GUARD POST | STANDARD CONSTRUCTION DETAILS WATER | | |
|---|---|---|---|---|
| | | DATE: AUGUST, 2010 | REV DATE: – | SHEET : SD-W18 |

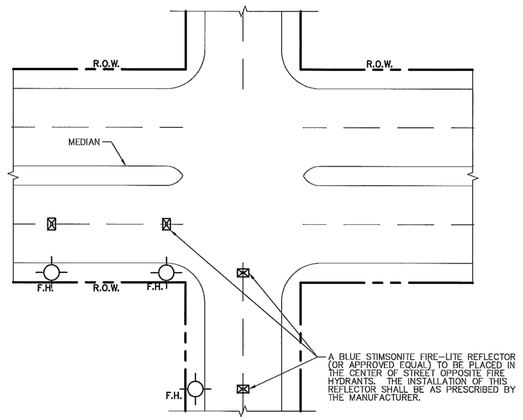


NOTE:
FIRE HYDRANT SHALL BE LOCATED OUTSIDE OF RADIUS.

TYPICAL FIRE HYDRANT REFLECTOR INSTALLATION

| Addison!. PUBLIC WORKS DEPARTMENT | FIRE HYDRANT REFLECTOR INSTALLATION | STANDARD CONSTRUCTION DETAILS WATER | | |
|---|---|---|---|---|
| | | DATE: AUGUST, 2010 | REV DATE: – | SHEET : SD-W19 |

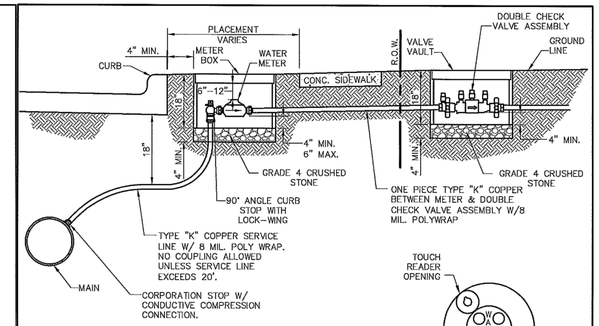


GENERAL INSTALLATION NOTES:

1. WATER METER SHALL BE PLACED IN CENTER OF LOT WITH THE SANITARY SEWER SERVICE TO BE LOCATED 10' DOWNSTREAM.
2. METER AND BOX SHALL BE SET BY THE CONTRACTOR TO ADDISON STANDARDS IN ALL CASES.
3. THE METER BOX SHALL BE SET WITHIN THE R.O.W. OR A DEDICATED UTILITY EASEMENT. IN ALL CASES, THE METER BOX SHALL BE PROTECTED FROM VEHICULAR TRAFFIC.
4. WATER SERVICES SHALL NOT BE CONNECTED TO DEAD END LINES OR FIRE HYDRANT LEADS.
5. ALL MATERIALS SHALL CONFORM TO THE TOWN OF ADDISON WATER SYSTEM REQUIREMENTS.

| Type "K" Copper Service Pipe. | Double Strap Bronze Service Saddle with C.C. Threads | East Jordan Iron Works Galvanized Meter Box With Iron Ring & Cover | | | | |
|---|---|---|---|---|---|---|
| | | Min. Dia. | Covers & Rigns | Min. Ht. | Min. Can Weight | Min. Total Weight |
| 3/4 Inch | 3/4 Inch | 18 Inches | 12⅝ Inches | 18 Inches | 13 lbs. | 42 lbs. |
| 1 Inch | 1 Inch | 24 Inches | 20⅜ Inches | 18 Inches | 17 lbs. | 98 lbs. |
| 1 1/2 Inch | 1 1/2 Inch | 28 Inches | 20⅜ Inches | 18 Inches | 20 lbs. | 127 lbs. |
| 2 Inch | 2 Inch | 28 Inches | 20⅜ Inches | 18 Inches | 20 lbs. | 127 lbs. |

| Addison!. PUBLIC WORKS DEPARTMENT | SERVICE CONNECTION WITH METER BOX | STANDARD CONSTRUCTION DETAILS WATER | | |
|---|---|---|---|---|
| | | DATE: AUGUST, 2010 | REV DATE: – | SHEET : SD-W20 |

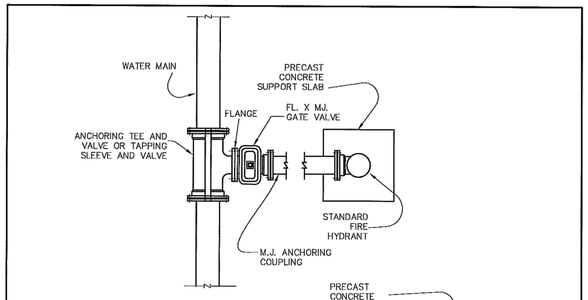


STANDARD INSTALLATION

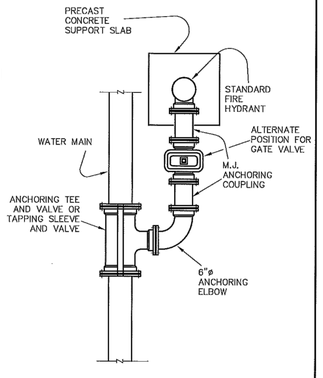


NOTE:
MEGALUGS SHALL BE USED AT ALL TEES AND BENDS.

ALTERNATE INSTALLATION

| Addison!. PUBLIC WORKS DEPARTMENT | TYPICAL FIRE HYDRANT INSTALLATION | STANDARD CONSTRUCTION DETAILS WATER | | |
|---|---|---|---|---|
| | | DATE: AUGUST, 2010 | REV DATE: – | SHEET : SD-W17 |

Know what's below. Call before you dig.

| No. | REVISIONS | DATE | BY |
|---|---|---|---|

PROJECT NO. 2021-01C/ BID NO. 21-69


Kimley»Horn
2201 WEST ROYAL LANE, SUITE 275, IRVING, TX 75063
PHONE: 214-420-5600
WWW.KIMLEY-HORN.COM


© 2021 KIMLEY-HORN AND ASSOCIATES, INC.

TEXAS REGISTERED ENGINEERING FIRM #F-928

9/10/2021

STATE OF TEXAS
RYAN DELMOTTE
114242
LICENSED PROFESSIONAL ENGINEER

| KHA PROJECT 063543031 | DATE 09/10/2021 | SCALE AS SHOWN | DESIGNED BY RMD | DRAWN BY CDS | CHECKED BY LNA |
|---|---|---|---|---|---|

**TOWN OF ADDISON**
ALPHA ROAD CONN.
FROM FARMERS BRANCH CREEK TO ALPHA ROAD

WATER LINE
STANDARD DETAILS
SHEET 2 OF 2
TOWN OF ADDISON

SHEET NUMBER
C7.05


Plotted By: Skadbolt, Cody September 08, 2021 09:17:30am K:\DAC_Civil\063543031_Addison_Alpha_Road_Connector\CADD\PlanSheets\WATER_DETAILS.dwg
This document, together with the concepts and designs presented herein, as an instrument of service, is intended only for the specific purpose and client for which it was prepared. Reuse of and improper reliance on this document without written authorization and adaptation by Kimley-Horn and Associates, Inc. shall be without liability to Kimley-Horn and Associates, Inc.

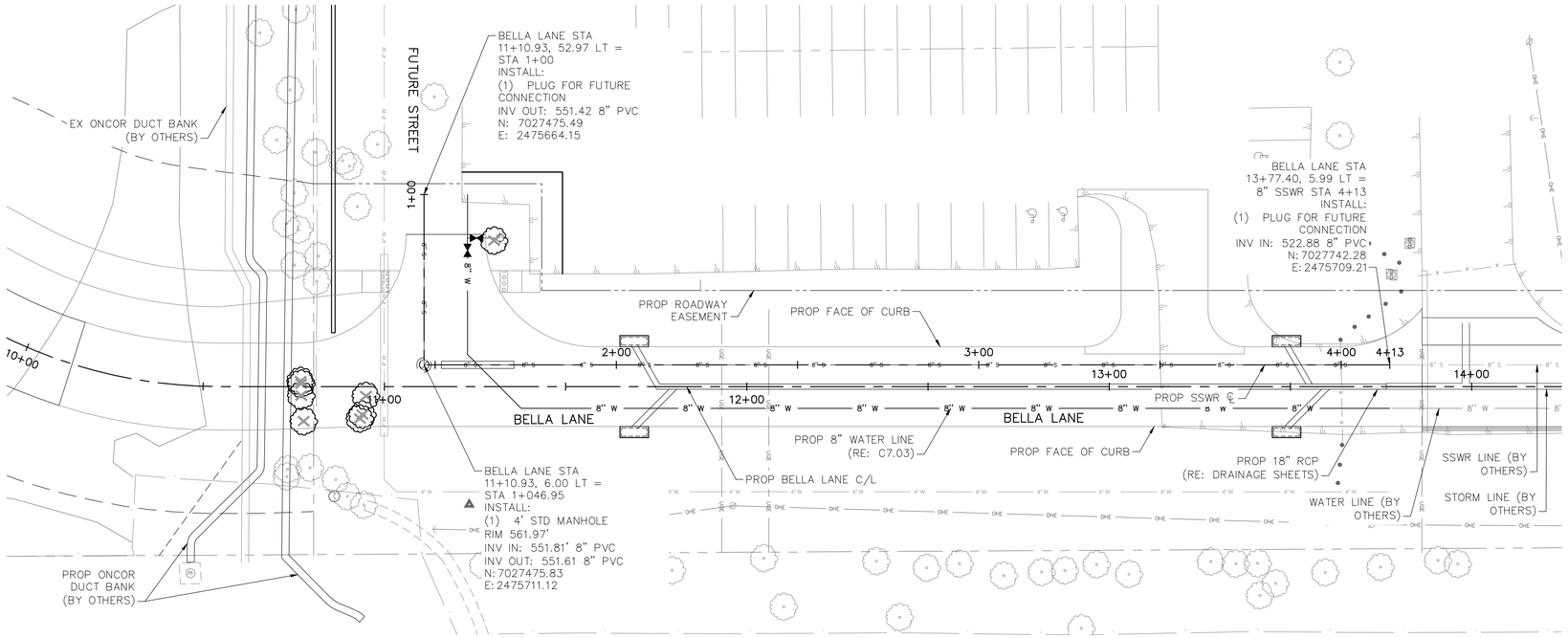


## UTILITY LEGEND

- PROPERTY LINE
- 8" W — PROP WATER LINE
- 8" S — PROP SANITARY SEWER LINE
- PROP WATER VALVE
- PROP FIRE HYDRANT
- PROP SANITARY SEWER MANHOLE
- G — EX GAS LINE
- U/T — EX UNDERGROUND TELEPHONE
- U/E — EX UNDERGROUND ELECTRIC
- OHE — EX OVERHEAD POWER LINE
- 8" W — EX WATER LINE
- 8" S — EX SANITARY SEWER LINE
- EX STORM SEWER LINE
- SANITARY SEWER/ WATER ABANDONMENT
- EX POWER POLE
- EX FIRE HYDRANT
- EX WATER VALVE
- EX SANITARY SEWER MANHOLE

NOTES:
1. CONTRACTOR IS RESPONSIBLE FOR RELOCATION OF ANY SIGNS AND COORDINATION WITH THE CITY ON ANY NECESSARY MODIFICATIONS.
2. CONTRACTOR IS RESPONSIBLE FOR LOCATING ALL IRRIGATION FACILITIES WITHIN PROJECT LIMITS.
3. THE EXISTENCE AND LOCATIONS OF ALL UNDERGROUND UTILITIES SHOWN ON THE DRAWINGS WERE OBTAINED FROM AVAILABLE RECORDS AND ARE APPROXIMATE. NEITHER THE OWNER NOR THE ENGINEER ASSUMES ANY RESPONSIBILITY FOR UTILITIES NOT SHOWN OR NOT IN THE LOCATION SHOWN. THE CONTRACTOR SHALL DETERMINE THE DEPTH AND LOCATION OF EXISTING UNDERGROUND UTILITIES PRIOR TO EXCAVATION AND SHALL BE REQUIRED TO TAKE ANY PRECAUTIONARY MEASURES TO PROTECT ALL LINES SHOWN AND/ OR ANY OTHER UNDERGROUND UTILITIES NOT OF RECORD OR NOT SHOWN ON THE PLANS. CONTRACTOR SHALL BE RESPONSIBLE FOR CONTACTING ALL FRANCHISE AND CITY UTILITIES PRIOR TO CONSTRUCTION.

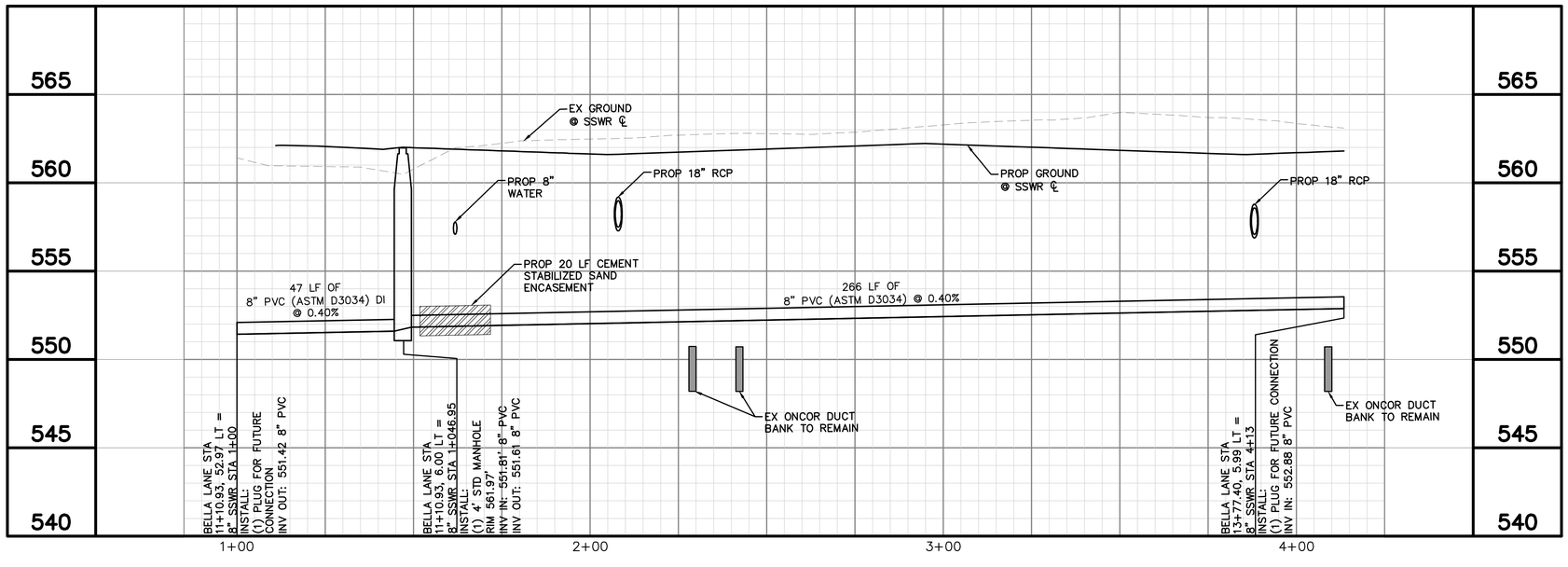


!!WARNING!!

EXISTING UTILITIES IN THE AREA. CONTRACTOR SHALL FIELD VERIFY THE LOCATION OF ALL EXISTING UTILITIES WITH THE PROVIDER PRIOR TO START OF CONSTRUCTION AND SHALL IMMEDIATELY NOTIFY THE ENGINEER OF ANY CONFLICTS DISCOVERED. CONTRACTOR IS RESPONSIBLE FOR COORDINATING UTILITY RELOCATION WHERE NECESSARY AND PROTECTING EXISTING UTILITIES (SHOWN OR NOT SHOWN). IF ANY EXISTING UTILITIES ARE DAMAGED, THE CONTRACTOR SHALL REPLACE THEM AT THEIR OWN EXPENSE.

811 Know what's **below.** **Call** before you dig.

| No. | REVISIONS | DATE | BY |
|---|---|---|---|
| | | | |

PROJECT NO. 2021-01C/ BID NO. 21-69

Kimley»Horn
2201 WEST ROYAL LANE, SUITE 275, IRVING, TX 75063
PHONE: 214-420-5600
WWW.KIMLEY-HORN.COM
© 2021 KIMLEY-HORN AND ASSOCIATES, INC.
TEXAS REGISTERED ENGINEERING FIRM #F-928

9/10/2021

STATE OF TEXAS
RYAN DELMOTTE
114242
LICENSED
PROFESSIONAL ENGINEER

| | |
|---|---|
| KHA PROJECT | 063543031 |
| DATE | 09/10/2021 |
| SCALE | AS SHOWN |
| DESIGNED BY | RMD |
| DRAWN BY | CDS |
| CHECKED BY | LNA |

# TOWN OF ADDISON
## ALPHA ROAD CONN.
FROM FARMERS BRANCH CREEK TO ALPHA ROAD

## SANITARY SEWER LINE
PLAN AND PROFILE
BEGIN TO END

SHEET NUMBER
C8.01

Plotted By: Shettigh, Cody September 09, 2021 - 09:18:09am K:\LAC-Civil\063543031-Addison-Alpha-Royal Connector\CAD\Pln-Sht\eh1_SSWR Pln-Prf\Pln-dwg
This document, together with the concepts and designs presented herein, as an instrument of service is intended only for the specific purpose and client for which it was prepared. Reuse of and improper reliance on this document without written authorization and adaptation by Kimley-Horn and Associates, Inc. shall be without liability to Kimley-Horn and Associates, Inc.

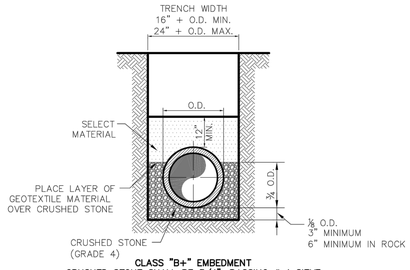


**CLASS "B+" EMBEDMENT**
**CRUSHED STONE SHALL BE 3/4", PASSING # 4 SIEVE**

TYPICAL P.V.C. WASTEWATER MAIN EMBEDMENT

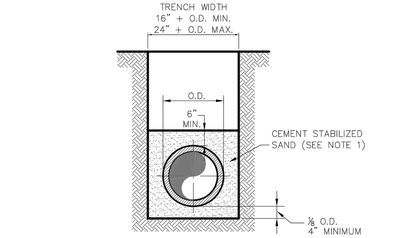


NOTE:
1. CEMENT STABILIZED SAND SHALL HAVE A MINIMUM OF 10% CEMENT PER CUBIC YARD OF CEMENT STABILIZED SAND MIXTURE, BASED ON LOOSE DRY WEIGHT VOLUME (AT LEAST 2.5 BAGS OF CEMENT PER CUBIC YARD OF MIXTURE). THE USE OF BROWN COLORING IN CEMENT STABILIZED SAND IS REQUIRED FOR PRESSURE RATED WASTEWATER MAIN AND LATERAL BEDDING.

P.V.C. WASTEWATER MAIN CEMENT STABILIZED SAND EMBEDMENT

Addison!
PUBLIC WORKS DEPARTMENT

P.V.C. WASTEWATER MAIN EMBEDMENT

STANDARD CONSTRUCTION DETAILS WASTEWATER

| DATE: | REV DATE: | SHEET : |
|---|---|---|
| AUGUST, 2010 | – | SD–WW01 |

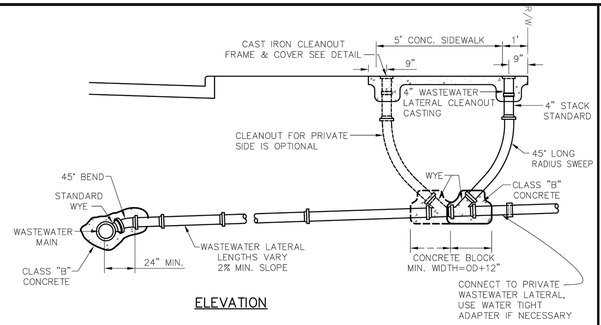


ELEVATION

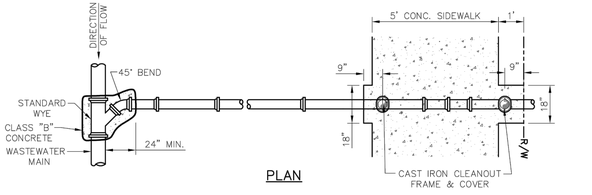


PLAN

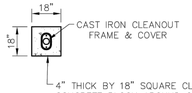


NOTES:
1. WASTEWATER LATERALS ARE TO BE CONSTRUCTED TO CLEAR EXISTING AND PROPOSED FACILITIES, SUCH AS STORM DRAIN MAINS, RETAINING WALLS, OTHER UTILITIES, ETC.
2. THE WASTEWATER LATERAL SHALL HAVE MINIMUM COVER OF 4'–0" BELOW THE PROPOSED CURB GRADE AT THE PROPERTY LINE, DETERMINED FROM PAVING GRADE, OR AS REQUIRED TO MAINTAIN A MINIMUM OF 2.0% GRADE, OR AS DIRECTED BY THE OWNER.

Addison!
PUBLIC WORKS DEPARTMENT

TWO–WAY CLEANOUT NEW CONSTRUCTION

STANDARD CONSTRUCTION DETAILS WASTEWATER

| DATE: | REV DATE: | SHEET : |
|---|---|---|
| AUGUST, 2010 | – | SD–WW02 |

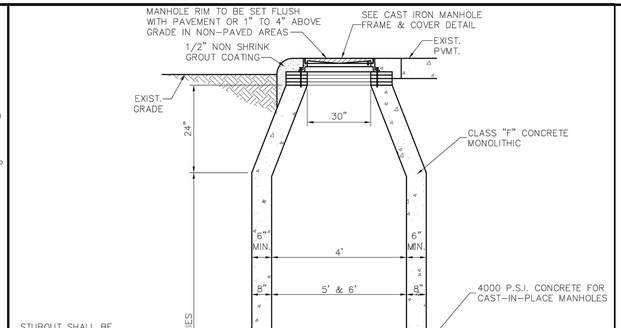


NOTES:
1. IF FALSE MANHOLE BOTTOMS ARE REQUIRED, THEY SHALL BE CONSTRUCTED, INSTALLED, AND REMOVED PER WASTEWATER MANHOLE FALSE BOTTOM STD. DETAIL.
2. WHERE MANHOLE'S ARE OUTSIDE OF PAVEMENT, FRAME & COVER SHALL BE CENTERED IN 5'x5' CONCRETE PAD CLASS 'A' CONCRETE, 4" THICK
3. ALL MANHOLES SHALL PASS VACUUM TEST AS PER NCTCOG SPECIFICATIONS

CAST–IN–PLACE NOTES:
1. KEYWAYS REQUIRED FOR ALL CONSTRUCTION JOINTS.
2. P.V.C. WATER STOP REQUIRED FOR ALL JOINTS IN LOWER 4'–0" OF MANHOLES
3. CONCRETE SHALL BE 4000 P.S.I.

Addison!
PUBLIC WORKS DEPARTMENT

CAST–IN–PLACE MANHOLE

STANDARD CONSTRUCTION DETAILS WASTEWATER

| DATE: | REV DATE: | SHEET : |
|---|---|---|
| AUGUST, 2010 | – | SD–WW04 |

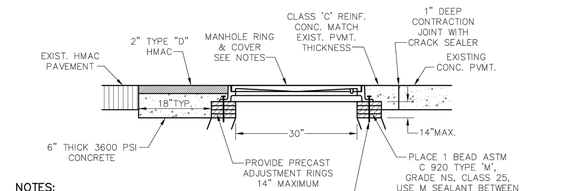


NOTES:
1. THERE SHALL BE SMOOTH TRANSITION BETWEEN THE FRAME GRADE RING, OR THE GRADE RING AND THE CONE.
2. CONCRETE EXTENSION RINGS MAY BE PRECAST OR CAST–IN–PLACE. BRICK EXTENSION RINGS WILL NOT BE ALLOWED.
3. STANDARD EXTENSIONS SHALL BE 2", 3", 4", 6", AND 12". EXTENSIONS SHALL BE SIZED TO MINIMIZE THE NUMBER REQUIRED TO RAISE THE MANHOLE. NO MORE THAN A TOTAL OF 14" OF EXTENSION WILL BE ALLOWED ON ANY MANHOLE.

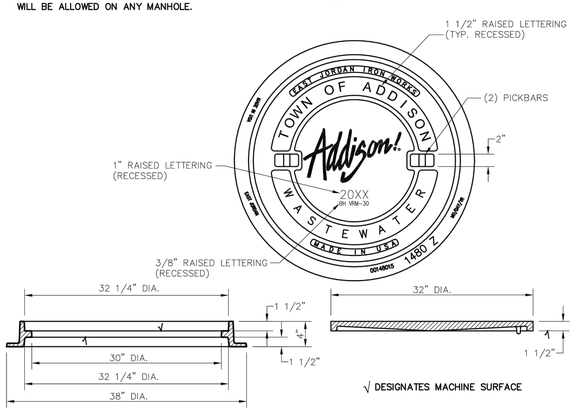


Addison!
PUBLIC WORKS DEPARTMENT

CAST IRON MANHOLE FRAME AND COVER

STANDARD CONSTRUCTION DETAILS WASTEWATER

| DATE: | REV DATE: | SHEET : |
|---|---|---|
| AUGUST, 2010 | – | SD–WW11 |

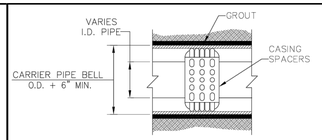


TYPICAL CASING SECTION

| CARRIER PIPE SIZE (IN) | STEEL ENCASEMENT O.D. (IN) | STEEL ENCASEMENT WALL THICKNESS (IN) |
|---|---|---|
| 6 | 14 | 1/4 |
| 8 | 18 | 1/4 |
| 12 | 21 | 1/4 |
| 18 | 27 | 3/8 |
| 21 | 30 | 3/8 |
| 24 | 36 | 3/8 |
| 27 | 39 | 1/2 |

FOR ALL CARRIER PIPES OVER 27": THE STEEL ENCASEMENT PIPE SHALL BE 12" LARGER THAN THE CARRIER PIPE AND THE STEEL ENCASEMENT WALL THICKNESS SHALL BE 1/2".

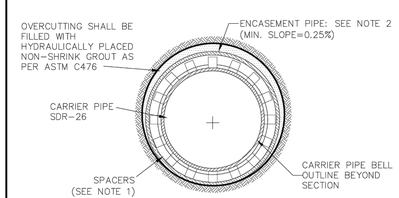


WASTEWATER ENCASEMENT

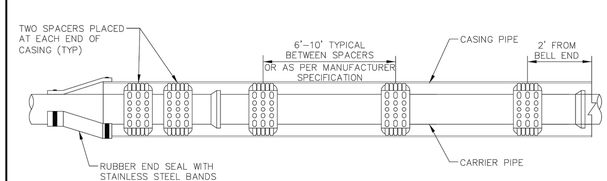


INSULATOR SPACING DETAIL

NOTES:
1. HIGH DENSITY POLYETHYLENE SPACERS, RACI OR EQUAL, SHALL BE USED. WHERE NO CASING PIPE IS REQUIRED OVERCUTTING AROUND UTILITY SHALL BE FILLED WITH HYDRAULICALLY PLACED NON–SHRINK GROUT AS PER ASTM C476.
2. ENCASEMENT PIPE SHALL BE HIGH DENSITY STEEL PIPE. ALL JOINTS TO BE WELDED 100%.

Addison!
PUBLIC WORKS DEPARTMENT

CASING

STANDARD CONSTRUCTION DETAILS WASTEWATER

| DATE: | REV DATE: | SHEET : |
|---|---|---|
| AUGUST, 2010 | – | SD–WW16 |

811
Know what's below.
Call before you dig.

| No. | REVISIONS | DATE | BY |
|---|---|---|---|
| | | | |

PROJECT NO. 2021–01C/ BID NO. 21–69

Kimley»Horn
2201 WEST ROYAL LANE, SUITE 275, IRVING, TX 75063
PHONE: 214–420–5600
WWW.KIMLEY–HORN.COM
© 2021 KIMLEY–HORN AND ASSOCIATES, INC.
TEXAS REGISTERED ENGINEERING FIRM #F–928

9/10/2021

STATE OF TEXAS
RYAN DELMOTTE
114242
LICENSED PROFESSIONAL ENGINEER

KHA PROJECT 063543031
DATE 09/10/2021
SCALE AS SHOWN
DESIGNED BY RMD
DRAWN BY CDS
CHECKED BY LNA

**TOWN OF ADDISON**
ALPHA ROAD CONN.
FROM FARMERS BRANCH CREEK TO ALPHA ROAD

SANITARY SEWER LINE
STANDARD DETAILS
TOWN OF ADDISON

SHEET NUMBER
C8.02

Plotted By: Shadbolt, Cody September 09, 2021 01:48:29pm K:\LAC_Civil\063543031_Addison_Alpha_Road_Connector\CADD\PlanSheets\SWR Details.dwg
This document, together with the concepts and designs presented herein, as an instrument of service, is intended only for the specific purpose and client for which it was prepared. Reuse of and improper reliance on this document without written authorization and adaptation by Kimley–Horn and Associates, Inc. shall be without liability to Kimley–Horn and Associates, Inc.

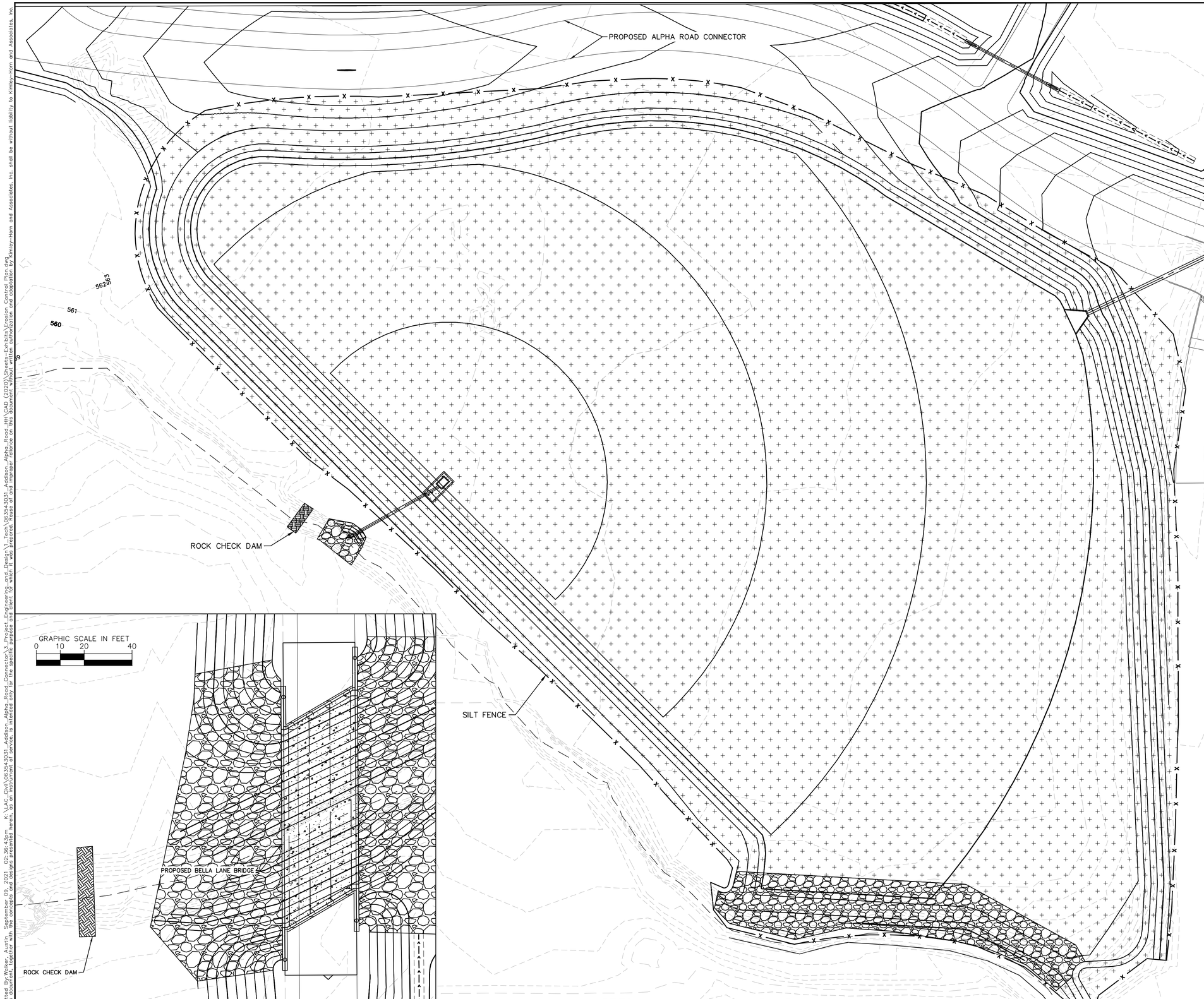


NORTH

GRAPHIC SCALE IN FEET
0 15 30 60

## LEGEND

- SCF — SEDIMENT CONTROL FENCE
- IP — INLET PROTECTION
- RCD — ROCK CHECK DAM
- PROP CONCRETE
- HYDRAULIC MULCHING WITH 4" TOPSOIL
- PROP 24" ROCK RIPRAP

## EROSION CONTROL NOTES

1. EROSION CONTROL DEVICES AS SHOWN ON THE EROSION CONTROL PLAN FOR THE PROJECT SHALL BE INSTALLED PRIOR TO THE START OF LAND DISTURBING ACTIVITIES ON THE PROJECT.
2. ALL EROSION CONTROL DEVICES ARE TO BE INSTALLED DURING SITE PREP IN ACCORDANCE WITH THE APPROVED PLANS AND SPECIFICATIONS FOR THE PROJECT.
3. CONTRACTOR SHALL MINIMIZE THE REMOVAL OF GRASS COVER UNTIL ACTUAL WORK PHASE BEGINS.
4. IF THE EROSION CONTROL PLAN AS APPROVED CANNOT CONTROL EROSION AND OFF-SITE SEDIMENTATION FROM THE PROJECT, THE EROSION CONTROL PLAN WILL BE REQUIRED TO BE REVISED AND/OR ADDITIONAL EROSION CONTROL DEVICES WILL BE REQUIRED (NO SEPARATE PAY).
5. OFF-SITE SOIL BORROW AND SPOIL AREAS ARE CONSIDERED AS PART OF THE PROJECT SITE AND MUST ALSO COMPLY WITH THE EROSION CONTROL REQUIREMENTS FOR THIS PROJECT. THIS INCLUDES THE INSTALLATION OF BMP'S TO CONTROL OFFSITE SEDIMENTATION AND THE ESTABLISHMENT OF PERMANENT GROUND COVER ON DISTURBED AREAS PRIOR TO FINAL APPROVAL OF THE PROJECT.
6. INSPECTIONS SHALL BE MADE WEEKLY AND AFTER RAIN STORM EVENTS TO INSURE THAT THE DEVICES ARE FUNCTIONING PROPERLY.
7. CONTRACTOR SHALL BE RESPONSIBLE FOR IDENTIFYING APPROPRIATE CONSTRUCTION ENTRANCE. WHEN SEDIMENT OR MUD HAS CLOGGED THE VOID SPACES BETWEEN STONES OR MUD IS BEING TRACKED ONTO A PUBLIC ROADWAY, THE STABILIZED CONSTRUCTION ENTRANCE AGGREGATE PAD MUST BE WASHED DOWN OR REPLACED. RUNOFF FROM THE WASHDOWN OPERATION SHALL NOT BE ALLOWED TO DRAIN DIRECTLY OFF SITE WITHOUT FIRST FLOWING THROUGH ANOTHER BMP TO CONTROL OFF SITE SEDIMENTATION. PERIODIC RE-GRADING OR THE ADDITION OF NEW STONE MAY BE REQUIRED TO MAINTAIN THE EFFICIENCY OF THE INSTALLATION.
8. CONTRACTOR SHALL BE RESPONSIBLE FOR SUBMITTAL OF N.O.I., N.O.T. AND ANY ADDITIONAL INFORMATION REQUIRED BY THE E.P.A. CONTRACTOR SHALL COMPLY WITH ALL E.P.A. STORMWATER POLLUTION PREVENTION REQUIREMENTS.
9. PRIOR TO FINAL ACCEPTANCE AND/OR OPENING ROADWAY TO TRAFFIC, ALL DISTURBED AREAS SHALL BE STABILIZED AND EROSION CONTROL DEVICES SHALL BE REMOVED.
10. SEE GENERAL NOTES SHEET FOR EROSION CONTROL REQUIREMENTS.

811 Know what's below. Call before you dig.

| No. | REVISIONS | DATE | BY |
|---|---|---|---|
| | | | |

PROJECT NO. XXXXX/ BID NO. XXXX-XXX


Kimley»Horn
2201 WEST ROYAL LANE, SUITE 275, IRVING, TX 75063
PHONE: 214-420-5600
WWW.KIMLEY-HORN.COM


© 2021 KIMLEY-HORN AND ASSOCIATES, INC.
TEXAS REGISTERED ENGINEERING FIRM #F-928


STATE OF TEXAS
JENNIFER M. LAFOY
97309
LICENSED
PROFESSIONAL ENGINEER
10 SEPTEMBER 2021

KHA PROJECT 063543031
DATE 09/10/2021
SCALE AS SHOWN
DESIGNED BY JML
DRAWN BY ADW
CHECKED BY JML

# TOWN OF ADDISON
## ALPHA ROAD CONN. FROM FARMERS BRANCH CREEK TO ALPHA ROAD

# EROSION CONTROL DETENTION POND

SHEET NUMBER
C9.01


Plotted By:Walker, Austin September 09, 2021 02:36:43pm K:\LAC_Civil\063543031_Addison_Alpha_Road_Connector\3_Project_Engineering_and_Design\1_Tech\063543031_Addison_Alpha_Road_HH\CAD (2020)\Sheets-Exhibits\Erosion Control Plan.dwg
This document, together with the concepts and designs presented herein, as an instrument of service, is intended only for the specific purpose and client for which it was prepared. Reuse of and improper reliance on this document without written authorization and adaptation by Kimley-Horn and Associates, Inc. shall be without liability to Kimley-Horn and Associates, Inc.

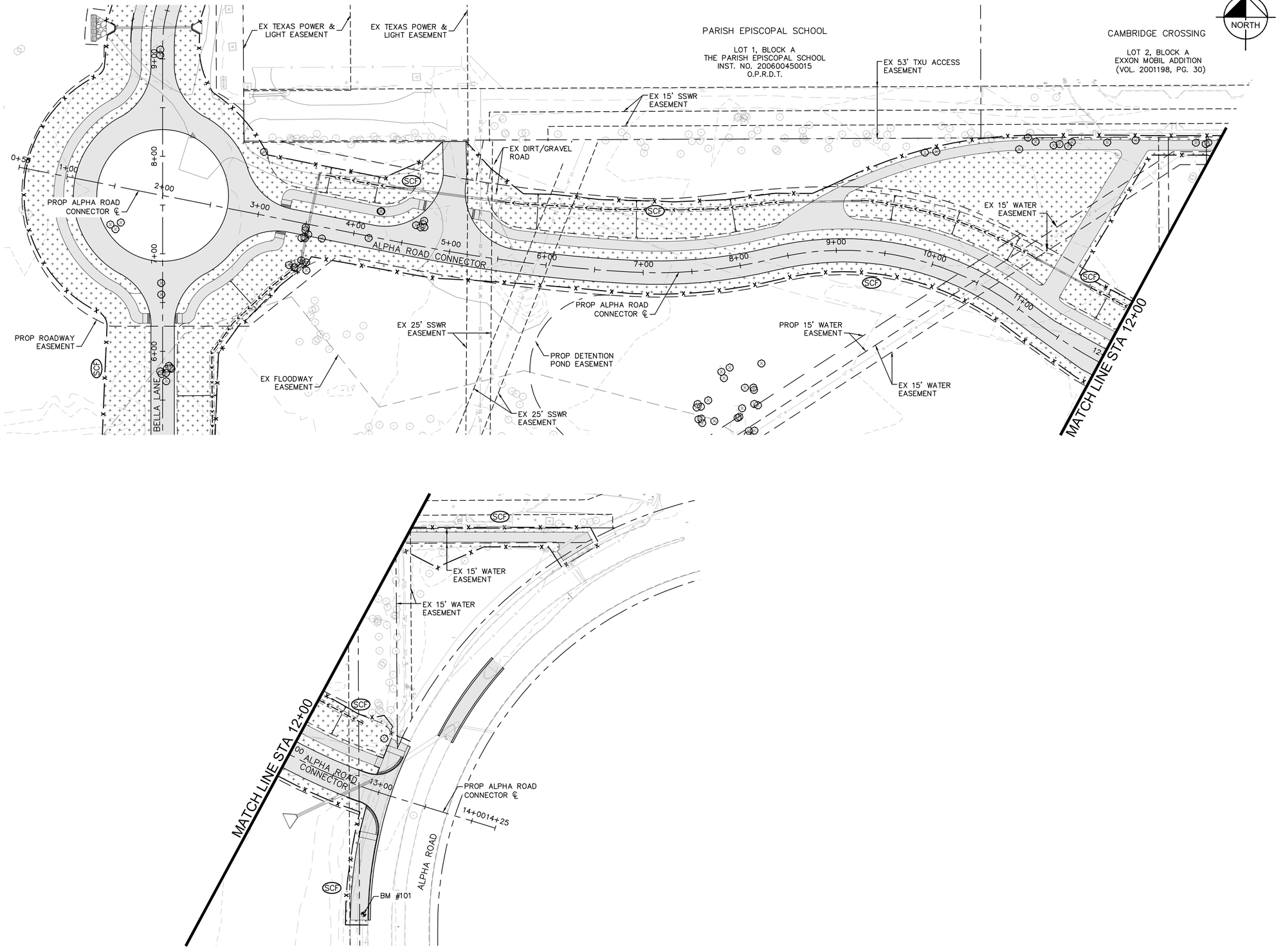


GRAPHIC SCALE IN FEET
0 25 50 100

NORTH

## LEGEND

- SCF — SEDIMENT CONTROL FENCE
- IP — INLET PROTECTION
- RCD — ROCK CHECK DAM
- PROP CONCRETE
- HYDRAULIC MULCHING WITH 4" TOPSOIL

## EROSION CONTROL NOTES

1. EROSION CONTROL DEVICES AS SHOWN ON THE EROSION CONTROL PLAN FOR THE PROJECT SHALL BE INSTALLED PRIOR TO THE START OF LAND DISTURBING ACTIVITIES ON THE PROJECT.
2. ALL EROSION CONTROL DEVICES ARE TO BE INSTALLED DURING SITE PREP IN ACCORDANCE WITH THE APPROVED PLANS AND SPECIFICATIONS FOR THE PROJECT.
3. CONTRACTOR SHALL MINIMIZE THE REMOVAL OF GRASS COVER UNTIL ACTUAL WORK PHASE BEGINS.
4. IF THE EROSION CONTROL PLAN AS APPROVED CANNOT CONTROL EROSION AND OFF-SITE SEDIMENTATION FROM THE PROJECT, THE EROSION CONTROL PLAN WILL BE REQUIRED TO BE REVISED AND/OR ADDITIONAL EROSION CONTROL DEVICES WILL BE REQUIRED (NO SEPARATE PAY).
5. OFF-SITE SOIL BORROW AND SPOIL AREAS ARE CONSIDERED AS PART OF THE PROJECT SITE AND MUST ALSO COMPLY WITH THE EROSION CONTROL REQUIREMENTS FOR THIS PROJECT. THIS INCLUDES THE INSTALLATION OF BMP'S TO CONTROL OFFSITE SEDIMENTATION AND THE ESTABLISHMENT OF PERMANENT GROUND COVER ON DISTURBED AREAS PRIOR TO FINAL APPROVAL OF THE PROJECT.
6. INSPECTIONS SHALL BE MADE WEEKLY AND AFTER RAIN STORM EVENTS TO INSURE THAT THE DEVICES ARE FUNCTIONING PROPERLY.
7. CONTRACTOR SHALL BE RESPONSIBLE FOR IDENTIFYING APPROPRIATE CONSTRUCTION ENTRANCE. WHEN SEDIMENT OR MUD HAS CLOGGED THE VOID SPACES BETWEEN STONES OR MUD IS BEING TRACKED ONTO A PUBLIC ROADWAY, THE STABILIZED CONSTRUCTION ENTRANCE AGGREGATE PAD MUST BE WASHED DOWN OR REPLACED. RUNOFF FROM THE WASHDOWN OPERATION SHALL NOT BE ALLOWED TO DRAIN DIRECTLY OFF SITE WITHOUT FIRST FLOWING THROUGH ANOTHER BMP TO CONTROL OFF SITE SEDIMENTATION. PERIODIC RE-GRADING OR THE ADDITION OF NEW STONE MAY BE REQUIRED TO MAINTAIN THE EFFICIENCY OF THE INSTALLATION.
8. CONTRACTOR SHALL BE RESPONSIBLE FOR SUBMITTAL OF N.O.I., N.O.T. AND ANY ADDITIONAL INFORMATION REQUIRED BY THE E.P.A. CONTRACTOR SHALL COMPLY WITH ALL E.P.A. STORMWATER POLLUTION PREVENTION REQUIREMENTS.
9. PRIOR TO FINAL ACCEPTANCE AND/OR OPENING ROADWAY TO TRAFFIC, ALL DISTURBED AREAS SHALL BE STABILIZED AND EROSION CONTROL DEVICES SHALL BE REMOVED.
10. SEE GENERAL NOTES SHEET FOR EROSION CONTROL REQUIREMENTS.

Know what's below.
Call before you dig.

| No. | REVISIONS | DATE | BY |
|---|---|---|---|
| | | | |

PROJECT NO. 2021-01C/ BID NO. 21-69

Kimley»Horn
2201 WEST ROYAL LANE, SUITE 275, IRVING, TX 75063
PHONE: 214-420-5600
WWW.KIMLEY-HORN.COM
© 2021 KIMLEY-HORN AND ASSOCIATES, INC.
TEXAS REGISTERED ENGINEERING FIRM #F-928

9/10/2021

STATE OF TEXAS
RYAN DELMOTTE
114242
LICENSED PROFESSIONAL ENGINEER

| | | | |
|---|---|---|---|
| KHA PROJECT 063543031 | DATE 09/10/2021 | SCALE AS SHOWN | DESIGNED BY RMD |
| | | DRAWN BY | CDS |
| | | CHECKED BY | LNA |

# TOWN OF ADDISON
## ALPHA ROAD CONN. FROM FARMERS BRANCH CREEK TO ALPHA ROAD

## EROSION CONTROL ALPHA ROAD CONNECTOR

SHEET NUMBER
C9.02

Plotted By: Skadbolt, Cody September 08, 2021 09:19:20am K:\DAC_Civil\063543031_Addison_Alpha_Road_Connector\CADD\PlanSheets\Erosion_Control.dwg
This document, together with the concepts and designs presented herein, as an instrument of service, is intended only for the specific purpose and client for which it was prepared. Reuse of and improper reliance on this document without written authorization and adaptation by Kimley-Horn and Associates, Inc. shall be without liability to Kimley-Horn and Associates, Inc.

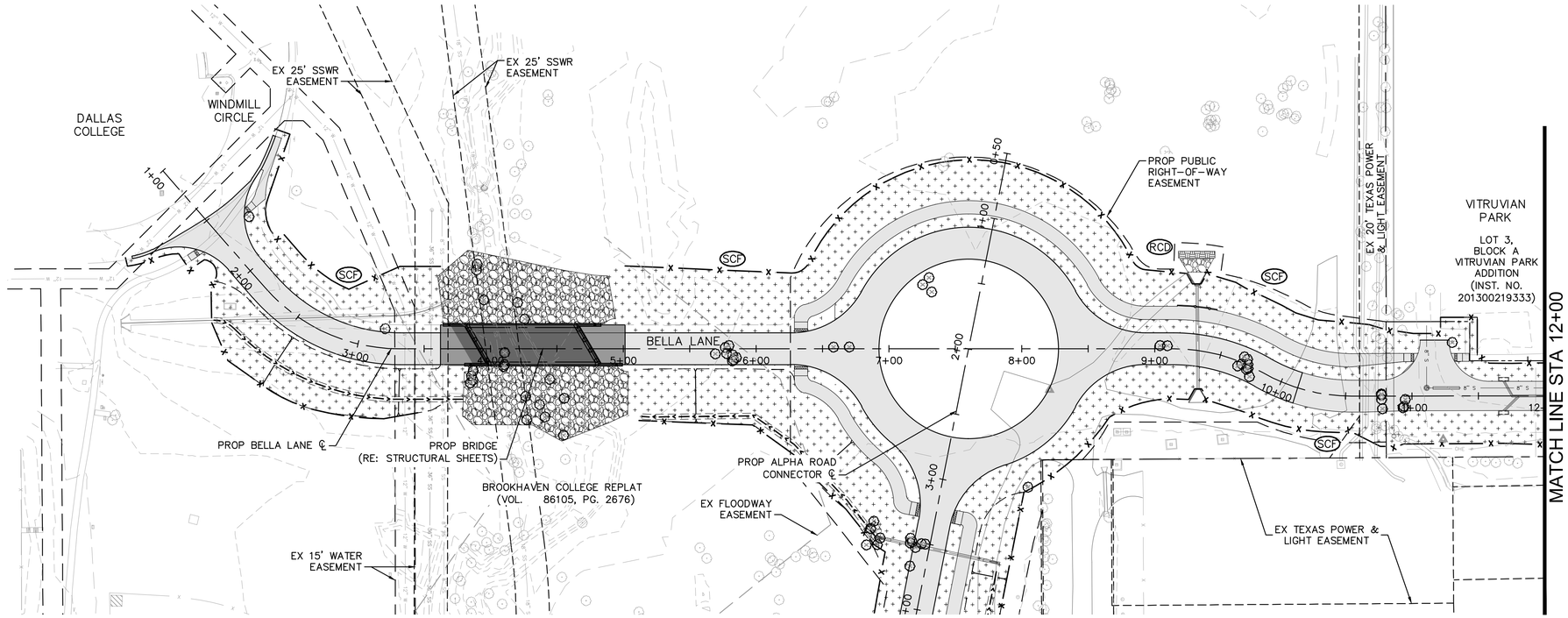


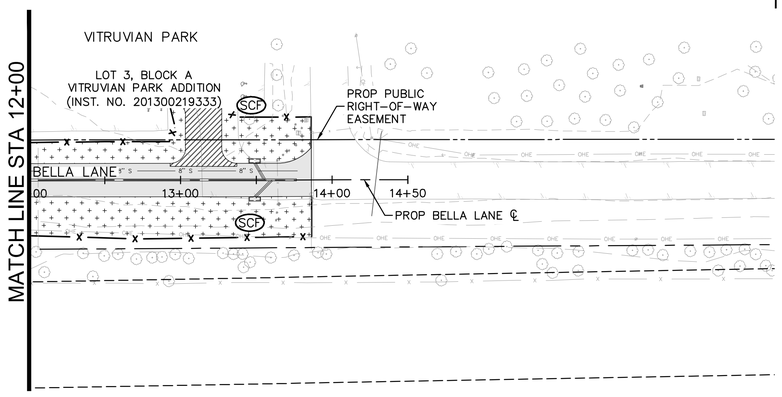


GRAPHIC SCALE IN FEET
0 25 50 100

## LEGEND

- SCF — SEDIMENT CONTROL FENCE
- IP — INLET PROTECTION
- RCD — ROCK CHECK DAM
- PROP CONCRETE
- HYDRAULIC MULCHING WITH 4" TOPSOIL

## EROSION CONTROL NOTES

1. EROSION CONTROL DEVICES AS SHOWN ON THE EROSION CONTROL PLAN FOR THE PROJECT SHALL BE INSTALLED PRIOR TO THE START OF LAND DISTURBING ACTIVITIES ON THE PROJECT.
2. ALL EROSION CONTROL DEVICES ARE TO BE INSTALLED DURING SITE PREP IN ACCORDANCE WITH THE APPROVED PLANS AND SPECIFICATIONS FOR THE PROJECT.
3. CONTRACTOR SHALL MINIMIZE THE REMOVAL OF GRASS COVER UNTIL ACTUAL WORK PHASE BEGINS.
4. IF THE EROSION CONTROL PLAN AS APPROVED CANNOT CONTROL EROSION AND OFF-SITE SEDIMENTATION FROM THE PROJECT, THE EROSION CONTROL PLAN WILL BE REQUIRED TO BE REVISED AND/OR ADDITIONAL EROSION CONTROL DEVICES WILL BE REQUIRED (NO SEPARATE PAY).
5. OFF-SITE SOIL BORROW AND SPOIL AREAS ARE CONSIDERED AS PART OF THE PROJECT SITE AND MUST ALSO COMPLY WITH THE EROSION CONTROL REQUIREMENTS FOR THIS PROJECT. THIS INCLUDES THE INSTALLATION OF BMP'S TO CONTROL OFFSITE SEDIMENTATION AND THE ESTABLISHMENT OF PERMANENT GROUND COVER ON DISTURBED AREAS PRIOR TO FINAL APPROVAL OF THE PROJECT.
6. INSPECTIONS SHALL BE MADE WEEKLY AND AFTER RAIN STORM EVENTS TO INSURE THAT THE DEVICES ARE FUNCTIONING PROPERLY.
7. CONTRACTOR SHALL BE RESPONSIBLE FOR IDENTIFYING APPROPRIATE CONSTRUCTION ENTRANCE. WHEN SEDIMENT OR MUD HAS CLOGGED THE VOID SPACES BETWEEN STONES OR MUD IS BEING TRACKED ONTO A PUBLIC ROADWAY, THE STABILIZED CONSTRUCTION ENTRANCE AGGREGATE PAD MUST BE WASHED DOWN OR REPLACED. RUNOFF FROM THE WASHDOWN OPERATION SHALL NOT BE ALLOWED TO DRAIN DIRECTLY OFF SITE WITHOUT FIRST FLOWING THROUGH ANOTHER BMP TO CONTROL OFF SITE SEDIMENTATION. PERIODIC RE-GRADING OR THE ADDITION OF NEW STONE MAY BE REQUIRED TO MAINTAIN THE EFFICIENCY OF THE INSTALLATION.
8. CONTRACTOR SHALL BE RESPONSIBLE FOR SUBMITTAL OF N.O.I., N.O.T. AND ANY ADDITIONAL INFORMATION REQUIRED BY THE E.P.A. CONTRACTOR SHALL COMPLY WITH ALL E.P.A. STORMWATER POLLUTION PREVENTION REQUIREMENTS.
9. PRIOR TO FINAL ACCEPTANCE AND/OR OPENING ROADWAY TO TRAFFIC, ALL DISTURBED AREAS SHALL BE STABILIZED AND EROSION CONTROL DEVICES SHALL BE REMOVED.
10. SEE GENERAL NOTES SHEET FOR EROSION CONTROL REQUIREMENTS.

Know what's **below.**
**Call** before you dig.

| No. | REVISIONS | DATE | BY |
|---|---|---|---|
| | | | |

PROJECT NO. 2021-01C/ BID NO. 21-69

Kimley»Horn
2201 WEST ROYAL LANE, SUITE 275, IRVING, TX 75063
PHONE: 214-420-5600
WWW.KIMLEY-HORN.COM
© 2021 KIMLEY-HORN AND ASSOCIATES, INC.
TEXAS REGISTERED ENGINEERING FIRM #F-928

9/10/2021

STATE OF TEXAS
RYAN DELMOTTE
114242
LICENSED PROFESSIONAL ENGINEER

| | | | |
|---|---|---|---|
| KHA PROJECT 063543031 | DATE 09/10/2021 | SCALE AS SHOWN | DESIGNED BY RMD |
| | | DRAWN BY CDS | CHECKED BY LNA |

**TOWN OF ADDISON**
ALPHA ROAD CONN.
FROM FARMERS BRANCH CREEK TO ALPHA ROAD

# EROSION CONTROL
BELLA LANE EXTENSION

SHEET NUMBER
C9.03

Plotted By: Shadbolt, Cody September 08, 2021 09:19:25am K:\IAC_Civil\063543031_Addison_Alpha_Road_Connector\CADD\PlanSheets\Erosion_Control.dwg
This document, together with the concepts and designs presented herein, as an instrument of service, is intended only for the specific purpose and client for which it was prepared. Reuse of and improper reliance on this document without written authorization and adaptation by Kimley-Horn and Associates, Inc. shall be without liability to Kimley-Horn and Associates, Inc.

## EROSION CONTROL PLAN NOTES

1. ALL OPERATORS AND/OR CONTRACTORS SHALL CONFORM TO THE TERMS AND CONDITIONS OF THE TEXAS COMMISSION ON ENVIRONMENTAL QUALITY (TCEQ), TPDES GENERAL PERMIT NO. TXR 150000 ISSUED AND DATED MARCH 5, 2003.
2. THE NOTICE OF INTENT (NOI), AS REQUIRED BY THE GENERAL PERMIT, MUST BE PROPERLY DISPLAYED ON SITE AT ALL TIMES BY EACH OPERATOR.
3. ALL RELEASES OF THE REPORTABLE QUANTITIES OF HAZARDOUS SUBSTANCES SHALL BE REPORTED IMMEDIATELY TO THE FACILITY OPERATOR, EPA AND TCEQ.
4. QUALIFIED OPERATOR PERSONNEL MUST INSPECT THE SITE AT LEAST ONCE EVERY 14 DAYS AND WITHIN 24 HOURS OF A STORM EVENT OF 0.5 INCHES OR GREATER. AS AN ALTERNATIVE, AN INSPECTION CAN BE CONDUCTED ONCE EVERY SEVEN (7) CALENDAR DAYS ON A DEFINED DAY. A DECISION ON WHICH METHOD TO USE MUST BE DECIDED BEFORE WORK BEGINS AND MUST BE FOLLOWED THROUGHOUT THE PROJECT.
5. MODIFICATIONS TO THE STORM WATER POLLUTION PREVENTION PLAN SHALL BE IMPLEMENTED AND BE IN-PLACE WITHIN A SEVEN CALENDAR DAY PERIOD.
6. IF ANY CONTRACTOR SEES A VIOLATION BY AN OPERATOR OR ANOTHER CONTRACTOR, THAT OPERATOR OR CONTRACTOR IN VIOLATION SHALL BE NOTIFIED AS WELL AS THE FACILITY OPERATOR.
7. EROSION CONTROL SHALL BE INSTALLED PRIOR TO GRADING.
8. ACCUMULATED SILT DEPOSITS SHALL BE REMOVED FROM SILT FENCES AND HAY BALE DIKES WHEN SILT DEPTH REACHES THREE INCHES OR 25%.
9. THE CONTRACTOR SHALL ADD OR DELETE EROSION PROTECTION AT THE REQUEST AND DIRECTION OF THE OPERATOR OR TOWN.
10. AFTER INSTALLATION OF PAVEMENT, FINAL LOT BENCHING AND GENERAL CLEANUP, THE CONTRACTOR SHALL ESTABLISH GRASS GROUNDCOVER IN ALL STREET PARKWAYS, LOT AND ALL OTHER DISTURBED AREAS. SODDING SHALL BE DONE AS SPECIFIED BY SECTION 202.5 AND SEEDING AS SPECIFIED BY SECTION 202.6 OF THE OCTOBER 2004 OR LATEST EDITION OF NCTCOG STANDARD SPECIFICATION.
11. IT SHALL BE THE CONTRACTOR'S RESPONSIBILITY TO CONTROL AND LIMIT SILT AND SEDIMENT LEAVING THE SITE. SPECIFICALLY, THE CONTRACTOR SHALL PROTECT ALL PUBLIC STREETS, ALLEYS, STREAMS AND STORM DRAINAGE SYSTEMS FROM EROSION DEPOSITS.
12. A DRAINAGE AREA MAP WILL BE INCLUDED WITH THE EROSION CONTROL PLAN.
13. CONSTRUCTION WASTE DISPOSAL CONTAINERS SHALL BE PROVIDED ON THE SITE FOR DISPOSAL OF ALL NON-HAZARDOUS CONSTRUCTION WASTE MATERIALS. THE CONTAINERS SHALL BE HAULED TO LANDFILL BY THE CONTRACTOR.
14. ALL HAZARDOUS MATERIALS SHALL BE HANDLED AND DISPOSED OF BY THE CONTRACTOR IN ACCORDANCE WITH FEDERAL, STATE AND LOCAL REGULATIONS.

## SILT FENCE NOTES

1. POSTS WHICH SUPPORT THE SILT FENCE SHALL BE INSTALLED ON A SLIGHT ANGLE TOWARD THE ANTICIPATED RUNOFF SOURCE. THE POST MUST BE EMBEDDED A MINIMUM OF 18 INCHES.
2. THE TOE OF THE SILT FENCE SHALL BE TRENCHED IN WITH A SPADE OR MECHANICAL TRENCHER, SO THAT THE DOWNSLOPE FACE OF THE TRENCH IS FLAT AND PERPENDICULAR TO THE LINE OF FLOW. WHERE FENCE CANNOT BE TRENCHED IN (E.G. PAVEMENT); WEIGHT FABRIC FLAP WITH WASHED GRAVEL ON THE UPHILL SIDE TO PREVENT FLOW UNDER FENCE.
3. THE TRENCH MUST BE A MINIMUM OF 6 INCHES DEEP AND 6 INCHES WIDE TO ALLOW FOR THE SILT FENCE FABRIC TO BE LAID IN THE GROUND AND BACKFILLED WITH COMPACTED MATERIAL.
4. SILT FENCE SHALL BE SECURELY FASTENED TO EACH SUPPORT POST OR TO WOVEN WIRE, WHICH IS IN TURN ATTACHED TO THE SUPPORT POST. THERE SHALL BE A 6 INCH DOUBLE OVERLAP, SECURELY FASTENED WHERE ENDS OF FABRIC MEET.
5. INSPECTION SHALL BE MADE EVERY TWO WEEKS OR AFTER EACH RAINFALL. REPAIR OR REPLACEMENT SHALL BE PROMPTLY AS NEEDED.
6. SILT FENCE SHALL BE REMOVED WHEN THE SITE IS COMPLETELY STABILIZED SO AS NOT TO BLOCK OR IMPEDE STORM FLOW OR DRAINAGE.
7. ACCUMULATED SILT SHALL BE REMOVED WHEN IT REACHES A DEPTH OF 3 INCHES. THE SILT SHALL BE DISPOSED OF AT AN APPROVED SITE AND IN SUCH A MANNER AS TO NOT CONTRIBUTE TO ADDITIONAL SILTATION.

Addison!
PUBLIC WORKS DEPARTMENT

EROSION CONTROL & SILT FENCE NOTES

STANDARD CONSTRUCTION DETAILS
EROSION CONTROL

| DATE: | REV DATE: | SHEET : |
|---|---|---|
| AUGUST, 2010 | – | SD-EC01 |

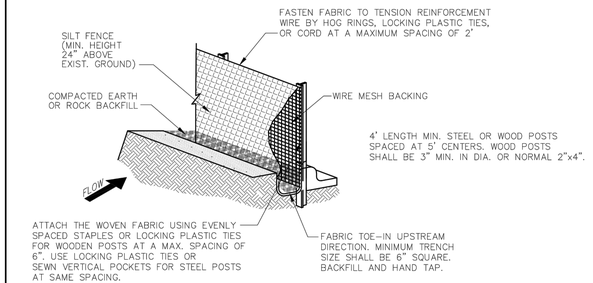


ISOMETRIC PLAN VIEW
N.T.S.

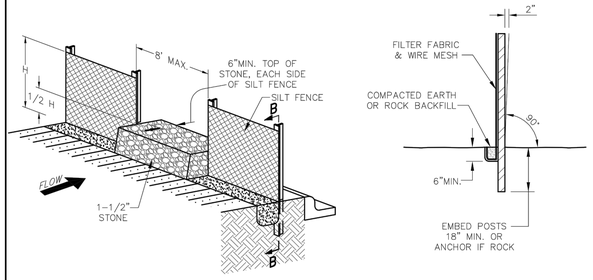


SILT FENCE
STONE OVERFLOW STRUCTURE
N.T.S.

Addison!
PUBLIC WORKS DEPARTMENT

SILT FENCE DETAIL

STANDARD CONSTRUCTION DETAILS
EROSION CONTROL

| DATE: | REV DATE: | SHEET : |
|---|---|---|
| AUGUST, 2010 | – | SD-EC02 |

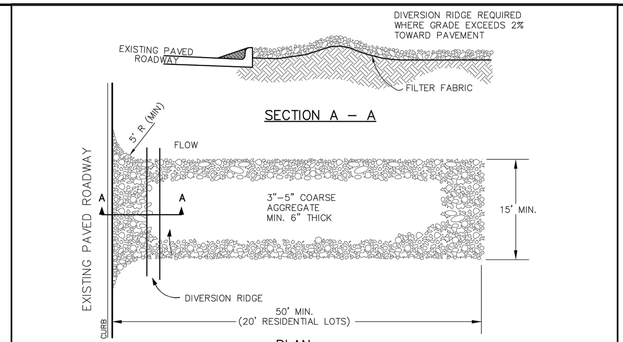


PLAN

TEMPORARY STONE CONSTRUCTION ENTRANCE/EXIT
N.T.S.

STABILIZED CONSTRUCTION ENTRANCE GENERAL NOTES:

1. WHEN NECESSARY, VEHICLES SHALL BE CLEANED TO REMOVE SEDIMENT PRIOR TO ENTRANCE ONTO A PUBLIC ROADWAY. WHEN WASHING IS REQUIRED, IT SHALL BE DONE ON AREA STABILIZED WITH CRUSHED STONE WITH DRAINAGE FLOWING AWAY FROM BOTH THE STREET AND THE STABILIZED ENTRANCE. ALL SEDIMENT SHALL BE PREVENTED FROM ENTERING ANY STORM DRAIN, DITCH OR WATERCOURSE USING APPROVED METHODS.
2. THE ENTRANCE SHALL BE MAINTAINED IN A CONDITION WHICH WILL PREVENT TRACKING OR FLOWING OF SEDIMENT ONTO PAVED SURFACES. THIS MAY REQUIRE PERIODIC TOP DRESSING WITH ADDITIONAL STONE AS CONDITIONS DEMAND. ALL SEDIMENT SPILLED, DROPPED, WASHED, OR TRACKED ONTO PAVED SURFACES MUST BE REMOVED IMMEDIATELY.
3. THE ENTRANCE MUST BE PROPERLY GRADED OR INCORPORATE A DRAINAGE SWALE TO PREVENT RUNOFF FROM LEAVING THE CONSTRUCTION SITE.
4. WHEN SEDIMENT HAS SUBSTANTIALLY CLOGGED THE VOID AREA BETWEEN THE ROCKS, THE AGGREGATE MAT MUST BE WASHED DOWN OR REPLACED. PERIODIC RE-GRADING AND TOP DRESSING WITH ADDITIONAL STONE MUST BE DONE TO KEEP THE EFFICIENCY OF THE ENTRANCE FROM DIMINISHING.

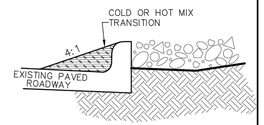


TRANSITION

Addison!
PUBLIC WORKS DEPARTMENT

TEMPORARY STONE CONSTRUCTION ENTRANCE/EXIT

STANDARD CONSTRUCTION DETAILS
EROSION CONTROL

| DATE: | REV DATE: | SHEET : |
|---|---|---|
| AUGUST, 2010 | – | SD-EC03 |

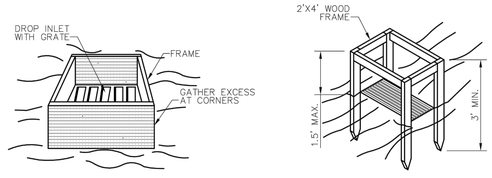


PERSPECTIVE VIEW




PERSPECTIVE VIEW

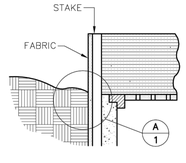


ELEVATION OR STAKE AND FABRIC ORIENTATION

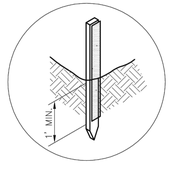


DETAIL 'A'

SPECIFIC APPLICATION
THIS METHOD OF INLET PROTECTION IS APPLICABLE WHERE THE INLET DRAINS A RELATIVELY FLAT AREA (SLOPE NO GREATER THAN 5%) WHERE THE INLET SHEET OR OVER-LAND FLOWS (NOT TO EXCEED 1 C.F.S.) ARE TYPICAL. THE METHOD SHALL NOT APPLY TO INLETS RECEIVING CONCENTRATED FLOWS SUCH AS IN STREETS OR HIGHWAY MEDIANS.

Addison!
PUBLIC WORKS DEPARTMENT

GRATE AND WYE INLET PROTECTION

STANDARD CONSTRUCTION DETAILS
EROSION CONTROL

| DATE: | REV DATE: | SHEET : |
|---|---|---|
| AUGUST, 2010 | – | SD-EC04 |

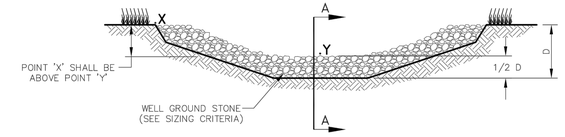


VIEW LOOKING UPSTREAM

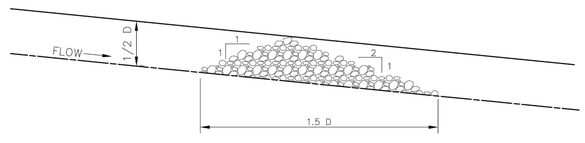


SECTION 'A-A'

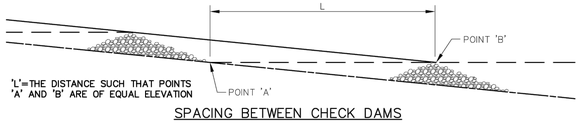


SPACING BETWEEN CHECK DAMS

ROCK CHECK DAM NOTES:

1. STONE SHALL BE WELL GRADED STONE WITH SIZE RANGE FROM 1-1/2 TO 3-1/2 INCHES IN DIAMETER DEPENDING ON EXPECTED FLOWS.
2. THE CHECK DAM SHALL BE INSPECTED AS SPECIFIED IN THE SWPPP AND SHALL BE REPLACED WHEN THE STRUCTURE CEASES TO FUNCTION AS INTENDED DUE TO SILT ACCUMULATION AMONG THE ROCKS, WASHOUT, CONSTRUCTION TRAFFIC DAMAGE, ETC.
3. WHEN SILT REACHES A DEPTH EQUAL TO ONE-THIRD OF THE HEIGHT OF THE CHECK DAM OR ONE FOOT, WHICHEVER IS LESS, THE SILT SHALL BE REMOVED AND DISPOSED OF PROPERLY.
4. WHEN THE SITE HAS ACHIEVED FINAL STABILIZATION OR ANOTHER EROSION OR SEDIMENT CONTROL DEVICE IS EMPLOYED, THE CHECK DAM AND ACCUMULATED SILT SHALL BE REMOVED AND DISPOSED OF IN AN APPROVED MANNER.

Addison!
PUBLIC WORKS DEPARTMENT

ROCK CHECK DAM

STANDARD CONSTRUCTION DETAILS
EROSION CONTROL

| DATE: | REV DATE: | SHEET : |
|---|---|---|
| AUGUST, 2010 | – | SD-EC05 |

Know what's **below.**
**Call** before you dig.

| No. | REVISIONS | DATE | BY |
|---|---|---|---|
| | | | |

PROJECT NO. 2021-01C/ BID NO. 21-69


Kimley»Horn
2201 WEST ROYAL LANE, SUITE 275, IRVING, TX 75063
PHONE: 214-420-5600
WWW.KIMLEY-HORN.COM


© 2021 KIMLEY-HORN AND ASSOCIATES, INC.

TEXAS REGISTERED ENGINEERING FIRM #F-928

9/10/2021

STATE OF TEXAS
RYAN DELMOTTE
114242
LICENSED
PROFESSIONAL ENGINEER

KHA PROJECT 063543031
DATE 09/10/2021
SCALE AS SHOWN
DESIGNED BY RMD
DRAWN BY CDS
CHECKED BY LNA

**TOWN OF ADDISON**
ALPHA ROAD CONN.
FROM FARMERS BRANCH CREEK TO ALPHA ROAD

EROSION CONTROL STANDARD DETAILS

SHEET NUMBER
C9.04


Plotted By: Shadbolt, Cody September 08, 2021 09:19:37am K:\IAC_Civil\063543031_Addison_Alpha_Road_Connector\CADD\PlanSheets\Erosion_Control Details.dwg
The documents, together with the concepts and designs presented herein, as an instrument of service, is intended only for the specific purpose and client for which it was prepared. Reuse of and improper reliance on this document without written authorization and adaptation by Kimley-Horn and Associates, Inc. shall be without liability to Kimley-Horn and Associates, Inc.

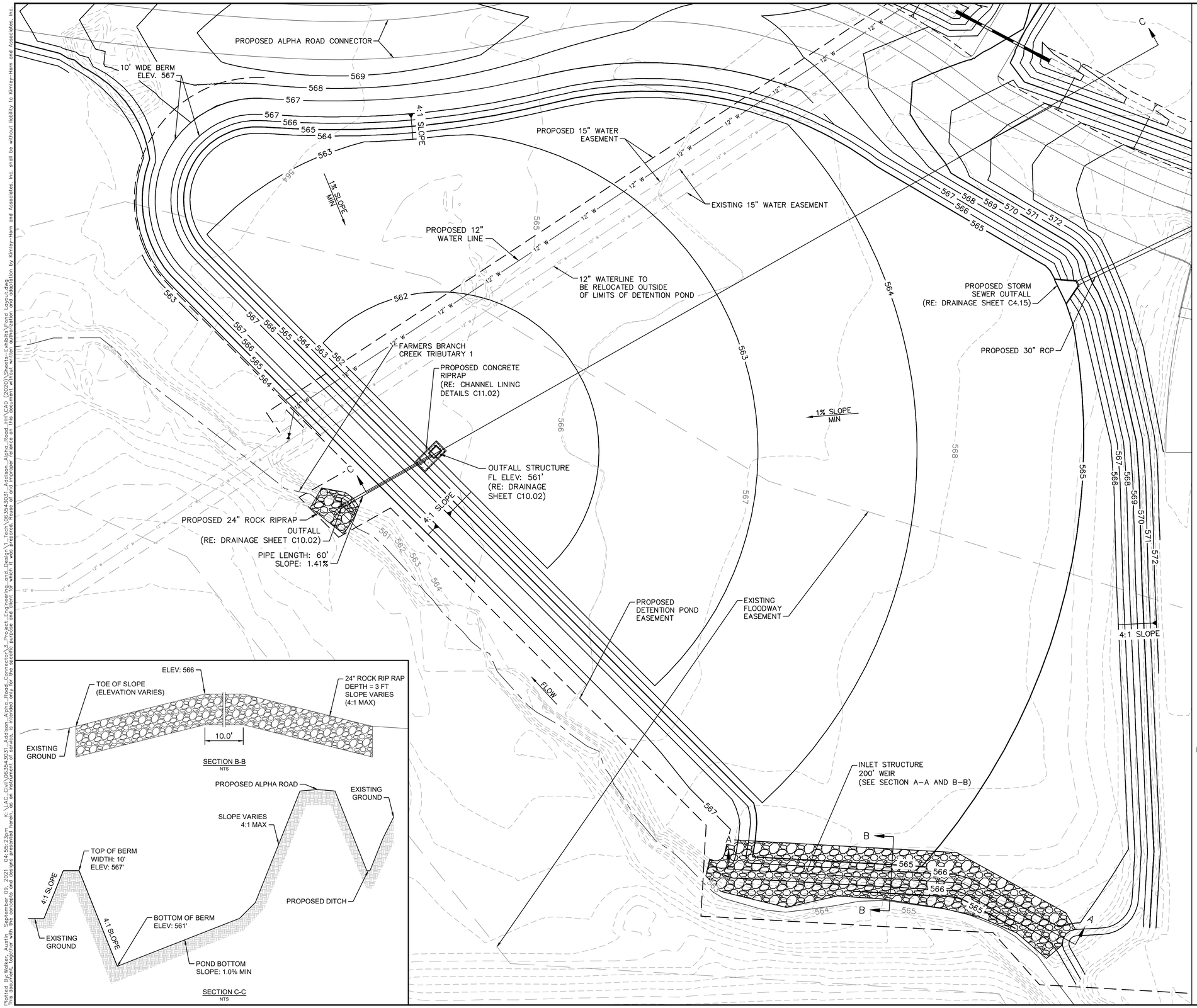


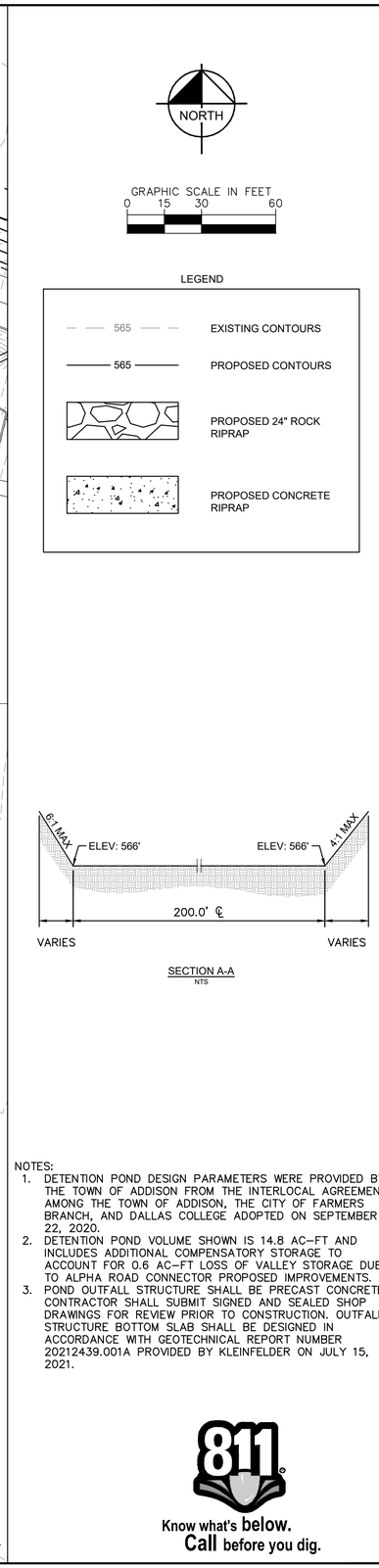


NOTES:

1. DETENTION POND DESIGN PARAMETERS WERE PROVIDED BY THE TOWN OF ADDISON FROM THE INTERLOCAL AGREEMENT AMONG THE TOWN OF ADDISON, THE CITY OF FARMERS BRANCH, AND DALLAS COLLEGE ADOPTED ON SEPTEMBER 22, 2020.
2. DETENTION POND VOLUME SHOWN IS 14.8 AC-FT AND INCLUDES ADDITIONAL COMPENSATORY STORAGE TO ACCOUNT FOR 0.6 AC-FT LOSS OF VALLEY STORAGE DUE TO ALPHA ROAD CONNECTOR PROPOSED IMPROVEMENTS.
3. POND OUTFALL STRUCTURE SHALL BE PRECAST CONCRETE. CONTRACTOR SHALL SUBMIT SIGNED AND SEALED SHOP DRAWINGS FOR REVIEW PRIOR TO CONSTRUCTION. OUTFALL STRUCTURE BOTTOM SLAB SHALL BE DESIGNED IN ACCORDANCE WITH GEOTECHNICAL REPORT NUMBER 20212439.001A PROVIDED BY KLEINFELDER ON JULY 15, 2021.

811 Know what's below. Call before you dig.

| No. | REVISIONS | DATE | BY |
|---|---|---|---|

PROJECT NO. XXXXX/ BID NO. XXXX-XXX


Kimley»Horn
2201 WEST ROYAL LANE, SUITE 275, IRVING, TX 75063
PHONE: 214-420-5600
WWW.KIMLEY-HORN.COM


© 2021 KIMLEY-HORN AND ASSOCIATES, INC.
TEXAS REGISTERED ENGINEERING FIRM #F-928


STATE OF TEXAS
JENNIFER M. LAFOY
97309
LICENSED PROFESSIONAL ENGINEER
10 SEPTEMBER 2021

KHA PROJECT 063543031
DATE 09/10/2021
SCALE AS SHOWN
DESIGNED BY JML
DRAWN BY ADW
CHECKED BY JML

# TOWN OF ADDISON
## ALPHA ROAD CONN. FROM FARMERS BRANCH CREEK TO ALPHA ROAD

## FARMERS BRANCH CREEK TRIBUTARY 1 CHANNEL GRADING

SHEET NUMBER
C10.01


Plotted By: Walker, Austin September 09, 2021 04:55:23pm K:\LAC_Civil\063543031_Addison_Alpha_Road_Connector\3_Project_Engineering_and_Design\1_Tech\063543031_Addison_Alpha_Road_HH\CAD (2020)\Sheets-Exhibits\Pond Layout.dwg
This document, together with the concepts and designs presented herein, as an instrument of service, is intended only for the specific purpose and client for which it was prepared. Reuse of and improper reliance on this document without written authorization and adaptation by Kimley-Horn and Associates, Inc. shall be without liability to Kimley-Horn and Associates, Inc.

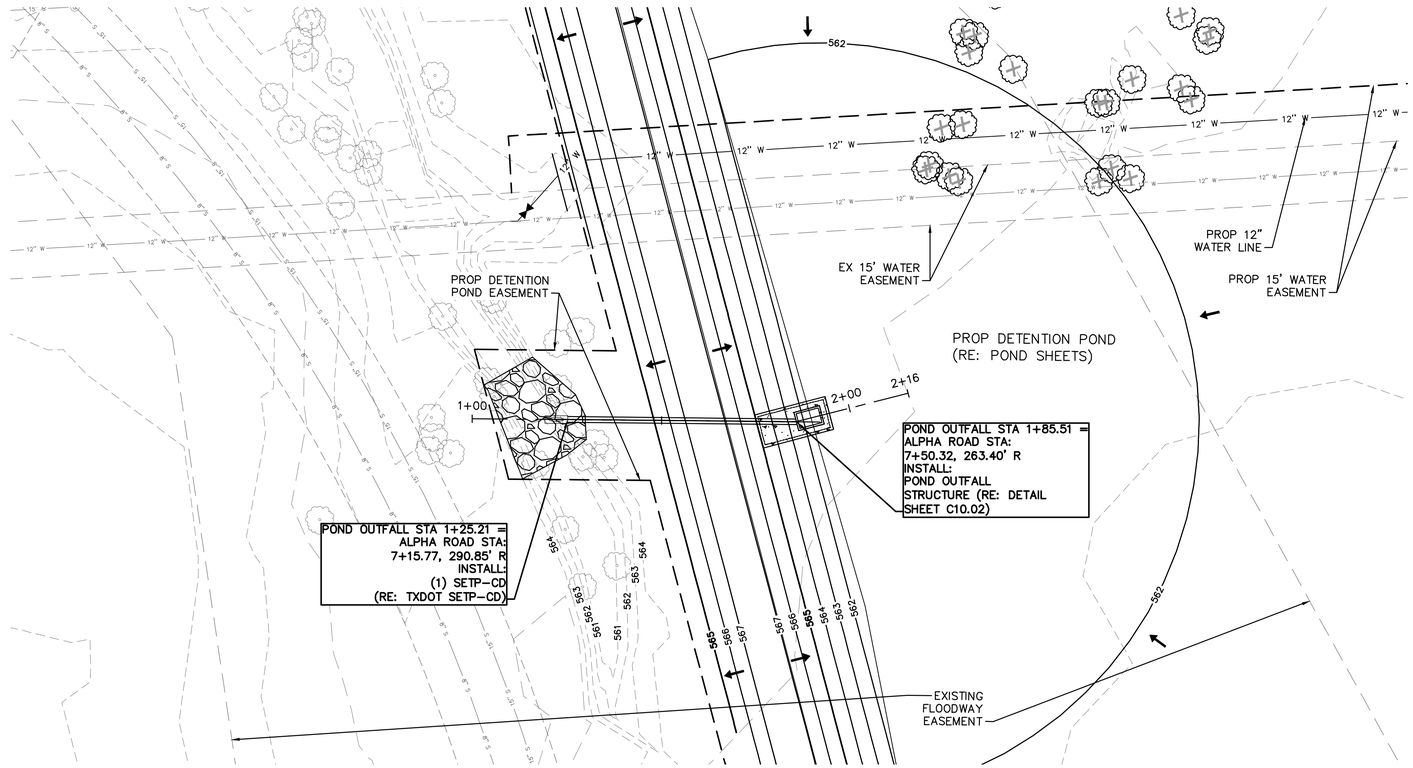


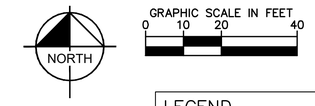


## LEGEND

- EX ROW
- EX EASEMENT
- PROP EASEMENT
- PROP STORM DRAIN
- 565 EX CONTOURS
- 565 PROP CONTOURS
- PROP 24" ROCK RIPRAP
- PROP CONCRETE RIPRAP

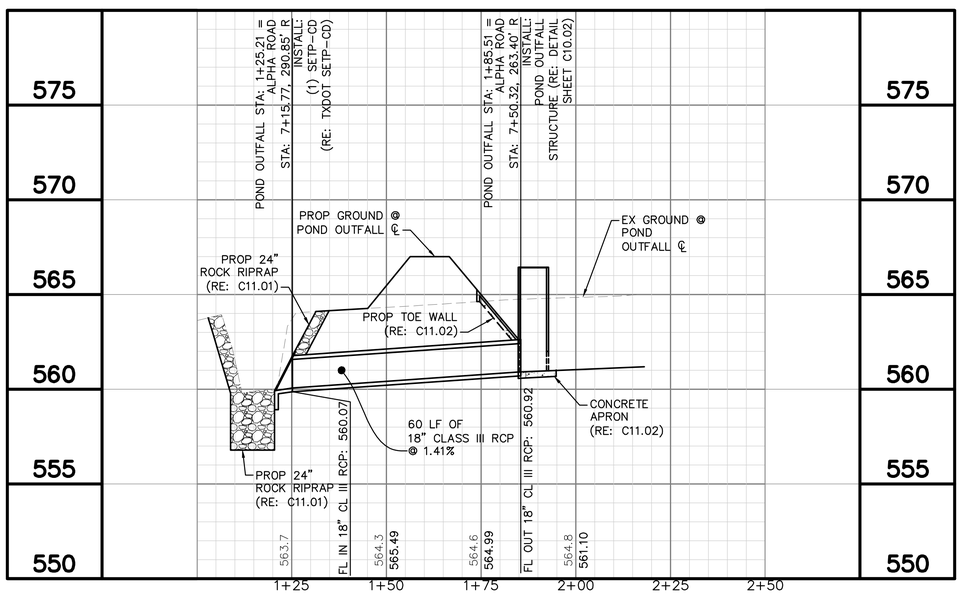


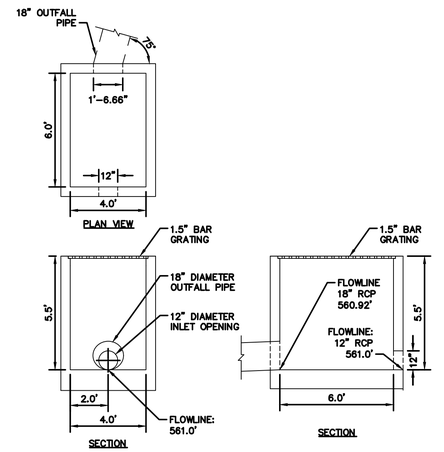


POND OUTLET STRUCTURE DETAIL
1"=4'

OUTLET STRUCTURE NOTES:

1. OUTLET STRUCTURE SHALL BE PRECAST CONCRETE. CONCRETE SHALL BE IN ACCORDANCE WITH TXDOT ITEM 421, CLASS C.
2. CONTRACTOR SHALL SUBMIT SHOP DRAWINGS AND ENGINEERING CALCULATIONS FOR OUTLET STRUCTURE. MAT SLAB OR FOOTING SHALL BE DESIGNED IN ACCORDANCE WITH THE PROJECT GEOTECHNICAL REPORT. SHOP DRAWINGS AND CALCULATIONS SHALL BE SIGNED AND SEALED BY A PROFESSIONAL ENGINEER LICENSED IN THE STATE OF TEXAS.
3. STEEL BAR GRATING SHALL BE REMOVABLE 1.5" STEEL GRATING, BOLTED OR CLIPPED.

811 Know what's below. Call before you dig.

| No. | REVISIONS | DATE | BY |
|---|---|---|---|

PROJECT NO. 2021-01C/ BID NO. 21-69


Kimley»Horn
2201 WEST ROYAL LANE, SUITE 275, IRVING, TX 75063
PHONE: 214-420-5600
WWW.KIMLEY-HORN.COM


© 2021 KIMLEY-HORN AND ASSOCIATES, INC.
TEXAS REGISTERED ENGINEERING FIRM #F-928


9/10/2021

STATE OF TEXAS
RYAN DELMOTTE
114242
LICENSED
PROFESSIONAL ENGINEER

KHA PROJECT 063543031
DATE 09/10/2021
SCALE AS SHOWN
DESIGNED BY RMD
DRAWN BY CDS
CHECKED BY LNA

# TOWN OF ADDISON
ALPHA ROAD CONN.
FROM FARMERS BRANCH
CREEK TO ALPHA ROAD

# DETENTION POND OUTFALL DRAINAGE SYSTEM D

SHEET NUMBER
C10.02


Plotted By:Walker, Austin September 09, 2021 05:09:57pm K:\LAC_Civil\063543031_Addison_Alpha_Road_Connector\CADD\PlanSheets\Drainage Plan&Profile2.dwg
This document, together with the concepts and designs presented herein, as an instrument of service, is intended only for the specific purpose and client for which it was prepared. Reuse of and improper reliance on this document without written authorization and adaptation by Kimley-Horn and Associates, Inc. shall be without liability to Kimley-Horn and Associates, Inc.

EXISTING FLOODWAY EASEMENT
PROPOSED ALPHA ROAD LIMITS
SELECT FILL. SEE SHEET C5.01
PROPOSED SIDEWALK
STA: 5+03.62 OFF: 17.16'RT
STA: 4+94.94 OFF: 13.00'RT
STA: 5+03.31 OFF: 49.18'RT
STA: 4+86.06 OFF: 19.00'LT
STA: 4+94.20 OFF: 22.50'LT
STA: 4+89.09 OFF: 55.60RT
FARMERS BRANCH CREEK TRIBUTARY 1
STA: 4+81.29 OFF: 13.00'RT
PROPOSED ALPHA ROAD ALIGNMENT
STA: 4+88.44 OFF: 54.80'LT
PROPOSED BRIDGE
STA: 4+65.22 OFF: 18.99'LT
PROPOSED FULLY DEVELOPED 100-YEAR FLOODPLAIN
PROPOSED CONCRETE
STA: 4+56.42 OFF: 58.80'LT
STA: 4+53.67 OFF: 69.39'RT
PROPOSED 24" ROCK RIPRAP
PROPOSED FULLY DEVELOPED 100-YEAR FLOODPLAIN
STA: 4+31.46 OFF: 57.31'RT
PROPOSED 24" ROCK RIPRAP
EXISTING 18" SANITARY SEWER LINE
EXISTING FLOODWAY EASEMENT
STA: 3+82.92 OFF: 74.13'LT
STA: 4+00.30 OFF: 13.00'RT
STA: 3+82.36 OFF: 19.00'LT
STA: 3+82.92 OFF: 13.00'RT
STA: 3+80.23 OFF: 17.29'RT
STA: 3+86.40 OFF: 57.03'RT
STA: 3+78.98 OFF: 50.79'RT
EXISTING 8" SANITARY SEWER LINE
STA: 3+68.94 OFF: 19.00'LT
STA: 3+60.15 OFF: 54.61'LT
STA: 3+64.47 OFF: 22.98'LT
EXISTING 8" SANITARY SEWER LINE
SELECT FILL. SEE SHEET C5.01
EXISTING 12" WATER LINE
EXISTING 15' WATER EASEMENT
PT: 3+31.79

NORTH

GRAPHIC SCALE IN FEET
0 5 10 20

LEGEND

- 565 — EXISTING CONTOURS
- 565 — PROPOSED CONTOURS
- FARMERS BRANCH CREEK TRIBUTARY 1 FLOWLINE
- POST-PROJECT FULLY DEVELOPED 100-YEAR FLOODPLAIN
- PROPOSED 24" ROCK RIPRAP
- PROPOSED CONCRETE RIPRAP
- PROPOSED SELECT FILL (SEE C5.01 FOR DETAILS)
- EXISTING TREES TO BE REMOVED
- EXISTING TREES

NOTES:
1. ALL STATION/OFFSET CALLOUTS IN REFERENCE TO PROPOSED ALPHA ROAD ALIGNMENT.
2. ACCESS TO CREEK SHALL BE THROUGH PROPOSED IMPROVEMENTS. CONTRACTOR SHALL NOT DISTURB CREEK BANK BEYOND LIMITS OF IMPROVEMENTS.
3. REFER TO BRIDGE LAYOUT FOR BRIDGE DETAILS.
4. SEE TXDOT CRR STANDARD FOR ADDITIONAL CONCRETE RIPRAP INFORMATION.
5. ROCK RIPRAP SHALL CONFORM TO TXDOT SPEC ITEM 432. ROCK RIPRAP SHALL BE NOMINAL SIZE OF 24 INCHES. FILTER FABRIC AND BEDDING STONE (6 INCHES THICK) SHALL BE REQUIRED AT ALL INTERFACES BETWEEN EXISTING GROUND AND ROCK RIPRAP.
6. WITHIN 2:1 EMBANKMENT ZONES, PROVIDE SELECT FILL BENEATH ROCK RIPRAP DOWN TO ELEVATION 558 (SOUTH EMBANKMENTS) AND ELEVATION 561 (NORTH EMBANKMENTS).

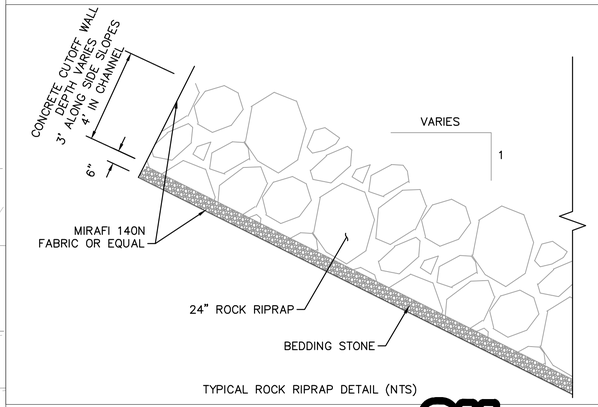

TYPICAL ROCK RIPRAP DETAIL (NTS)

Know what's **below.**
**Call** before you dig.

| No. | REVISIONS | DATE | BY |
|---|---|---|---|
| | | | |

PROJECT NO. XXXXX/ BID NO. XXXX-XXX


Kimley»Horn
2201 WEST ROYAL LANE, SUITE 275, IRVING, TX 75063
PHONE: 214-420-5600
WWW.KIMLEY-HORN.COM


© 2021 KIMLEY-HORN AND ASSOCIATES, INC.

TEXAS REGISTERED ENGINEERING FIRM #F-928

STATE OF TEXAS
JENNIFER M. LATTY
97309
LICENSED PROFESSIONAL ENGINEER
10 SEPTEMBER 2021

| | |
|---|---|
| KHA PROJECT | 063543031 |
| DATE | 09/10/2021 |
| SCALE | AS SHOWN |
| DESIGNED BY | JML |
| DRAWN BY | ADW |
| CHECKED BY | JML |

**TOWN OF ADDISON**
ALPHA ROAD CONN.
FROM FARMERS BRANCH CREEK TO ALPHA ROAD

FARMERS BRANCH CREEK TRIBUTARY 1
CHANNEL GRADING

SHEET NUMBER
C11.01


Plotted By: Walker, Austin Sep/member 09, 2021 09:36:57pm K:\ADC Dist\063543031_Addison-Alpha Road Connection\3_Project Engineering and Design\1_Team\063543031 This document, together with the concepts and designs presented herein, as an instrument of service, is intended only for the specific purpose and client for which it was prepared. Reuse of and improper reliance on this document without written authorization and adaptation by Kimley-Horn and Associates, Inc. shall be without liability to Kimley-Horn and Associates, Inc.

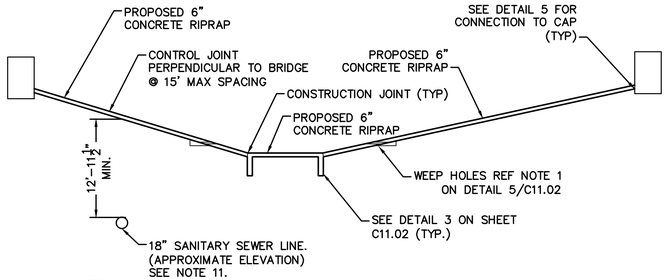


1 C11.02 **CHANNEL LINING TYPICAL SECTION**

SCALE: 1" = 10' [RE: C11.01]

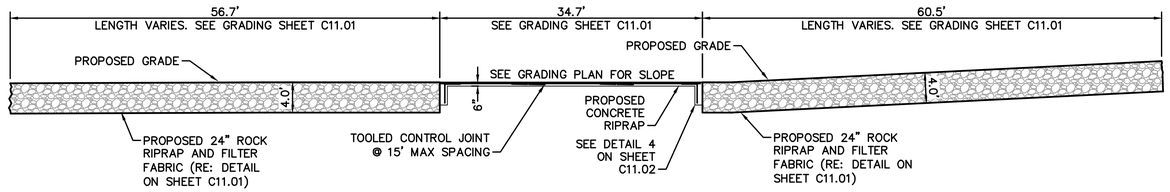


2 C11.02 **CHANNEL LINING TYPICAL SECTION**

SCALE: 1" = 10' [RE: C11.01]

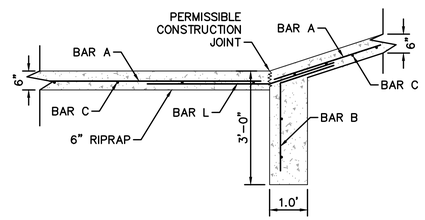


3 C11.02 **6" RIPRAP GRADE BREAK DETAIL**

SCALE: 1/2" = 1'

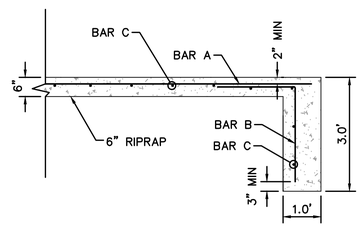


4 C11.02 **TYPICAL 6" CONCRETE RIPRAP DETAIL**

SCALE: 1/2" = 1'

| REBAR SCHEDULE | | |
|---|---|---|
| BAR | SIZE | SPACING |
| A | 4 | 1'-0" |
| B | 4 | 1'-0" |
| C | 4 | 1'-0" |
| L | 4 | 1'-0" |

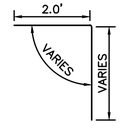


BAR B

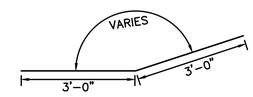


BAR L

NOTES:

1. CHAMFER ALL EXPOSED EDGES OF CONCRETE ¾".
2. ALL CONCRETE SHALL HAVE A 28-DAY COMPRESSIVE STRENGTH OF 3,000 PSI.
3. ALL CLEAR COVER FOR CONCRETE SHALL BE 3 INCHES UNLESS OTHERWISE SHOWN.
4. ALL REINFORCING STEEL SHALL BE ASTM 615 GR 60 STEEL.
5. ALL REINFORCING IN CHANNEL BOTTOM SHALL BE EPOXY COATED. EPOXY MATERIAL SHALL BE SUBMITTED TO OWNER FOR APPROVAL PRIOR TO CONSTRUCTION.
6. MIX DESIGNS FOR CONCRETE SHALL BE SUBMITTED TO OWNER FOR APPROVAL PRIOR TO CONSTRUCTION.
7. REINFORCING BAR DIMENSIONS ARE TO OUTSIDE OF BAR UNLESS OTHERWISE NOTED.
8. CONTRACTOR TO VERIFY ALL ELEVATIONS AND DIMENSIONS.
9. ROCK RIPRAP SHALL BE A MINIMUM OF 24-INCH (NOMINAL SIZE). ROCK RIPRAP SHALL CONFORM TO TXDOT ITEM 432 RIPRAP.
10. RCP SHALL HAVE PRECAST BEVELED ENDS TO MATCH RIPRAP GRADE WITH 12" OF EXPOSED REINFORCING. CONTRACTOR SHALL SUBMIT SHOP DRAWINGS FOR REINFORCEMENT NEEDED TO DEVELOP THE CONNECTION BETWEEN RIPRAP AND RCP (SEALED BY A PROFESSIONAL ENGINEER REGISTERED IN THE STATE OF TEXAS).
11. VERTICAL CLEARANCE SHALL BE A MIN. 12'-11½" AS SHOWN ON THE PLANS. CONTRACTOR SHALL LOCATE AND VERIFY ELEVATIONS OF UTILITIES PRIOR TO ANY DRILLING OR EXCAVATION. CONTRACTOR IS RESPONSIBLE TO PROTECT ALL EXISTING UTILITIES DURING CONSTRUCTION.
12. FOR DETAILS AND SPECIFICATIONS NOT ADDRESSED HEREIN, SEE TXDOT STANDARDS AND SPECIFICATIONS.

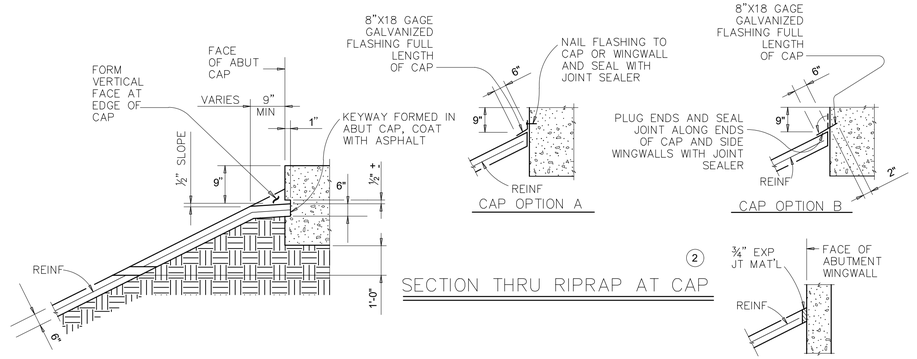


SHOWING KEYWAY OPTION

1. PROVIDE LOWER LEVEL OF 2" DIA WEEP HOLES AT 10' C-C BACKED BY 1 CF PACKET OF GRAVEL AND GALVANIZED HARDWARE CLOTH AT ALL LOCATIONS.
2. PROVIDE SEALING OPTIONS FOR JOINT BETWEEN THE FACE OF CAP AND RIPRAP AS DESIGNATED BY THE ENGINEER OR AS SHOWN ELSEWHERE ON PLANS.
3. FLASHING (SHOWN IN CAP OPTION A) SHALL BE USED AT WINGWALL IN ADDITION TO EXP JT MAT'L.
4. 8" x 18 GAGE GALC SHEET METAL.
5. REINFORCING STEEL IS CONTINUOUS THROUGH RIPRAP CONSTRUCTION JOINTS. PROVIDE REINFORCING STEEL THAT EXTENDS 2'-0" MINIMUM INTO ADJACENT RIPRAP ON EACH SIDE OF CONSTRUCTION JOINT EVEN IF SYNTHETIC REINFORCING FIBER IS UTILIZED.

5 C11.02 **CONCRETE RIPRAP**

SCALE: NTS

Know what's **below.** **Call** before you dig.

PROJECT NO. XXXXX/ BID NO. XXXX-XXX

| No. | REVISIONS | DATE | BY |
|---|---|---|---|
| | | | |

Kimley»Horn
2201 WEST ROYAL LANE, SUITE 275, IRVING, TX 75063
PHONE: 214-420-5600
WWW.KIMLEY-HORN.COM
© 2021 KIMLEY-HORN AND ASSOCIATES, INC.
TEXAS REGISTERED ENGINEERING FIRM #F-928

STATE OF TEXAS
BRIAN J. LAFOY
89363
LICENSED
PROFESSIONAL ENGINEER
09/10/2021

KHA PROJECT 063543031
DATE 09/10/2021
SCALE AS SHOWN
DESIGNED BY BCS
DRAWN BY AT/TLS
CHECKED BY BJL

**TOWN OF ADDISON**
ALPHA ROAD CONN.
FROM FARMERS BRANCH CREEK TO ALPHA ROAD

FARMERS BRANCH CREEK TRIBUTARY 1 CHANNEL LINING DETAILS

SHEET NUMBER
C11.02

Plotted By: Turabi, Abuzar September 10, 2021 09:08:08am K:\LAC_Civil\063543031_Addison_Alpha_Road_Connector\CADD\PlanSheets\Channel Details.dwg
This document, together with the concepts and designs presented herein, as an instrument of service, is intended only for the specific purpose and client for which it was prepared. Reuse of and improper reliance on this document without written authorization and adaptation by Kimley-Horn and Associates, Inc. shall be without liability to Kimley-Horn and Associates, Inc.

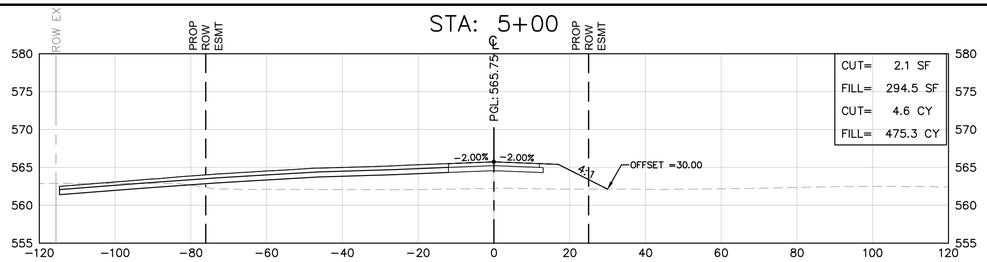


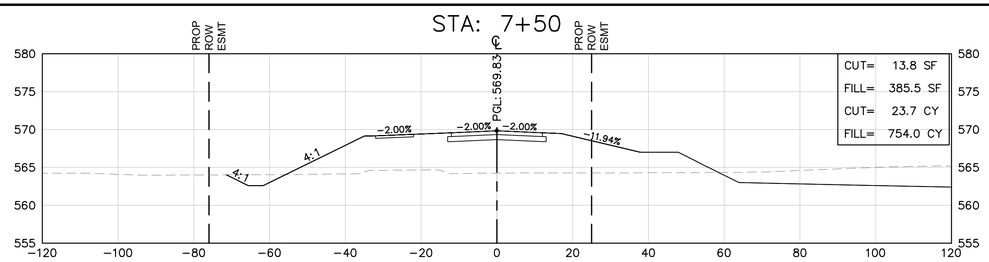


CUT & FILL QUANTITIES SHOWN DO NOT INCLUDE DETENTION POND OR ALPHA CONNECTOR TRAIL

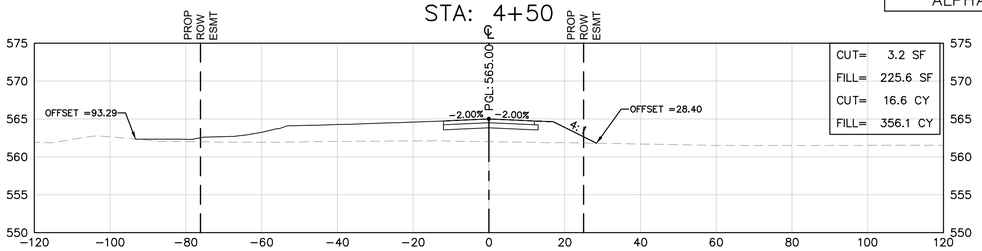


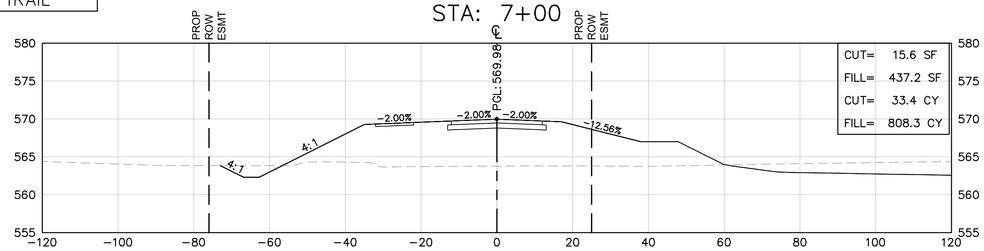


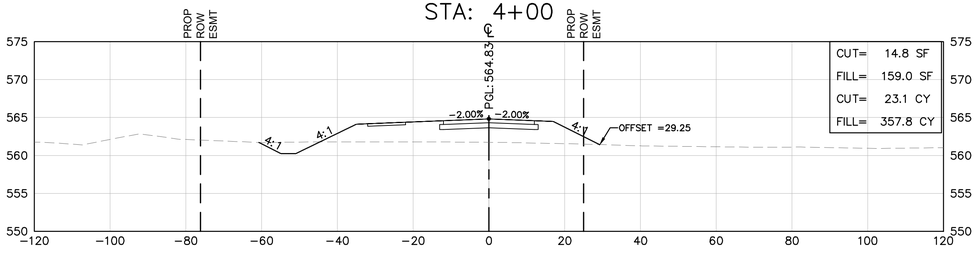


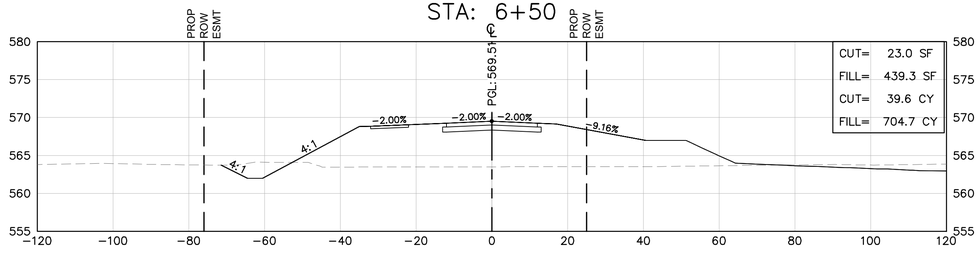


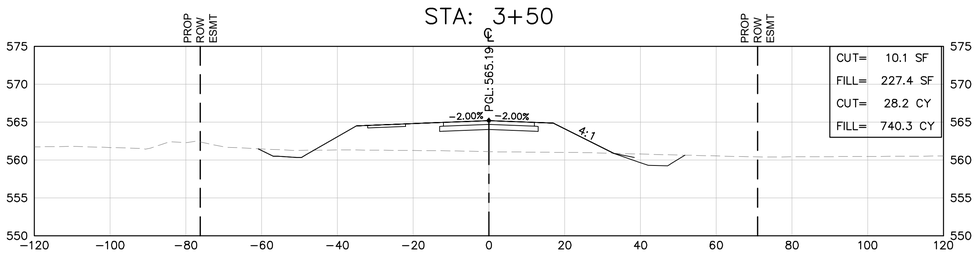


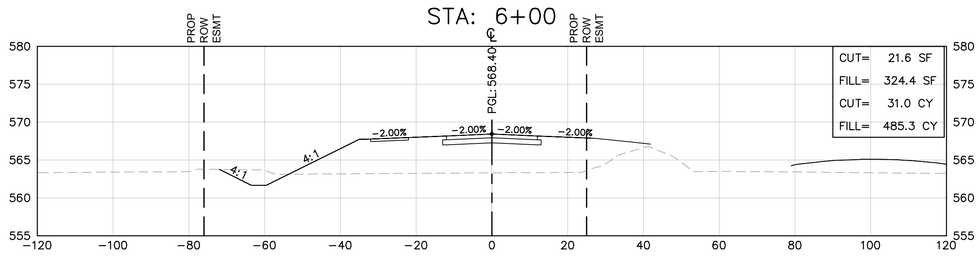


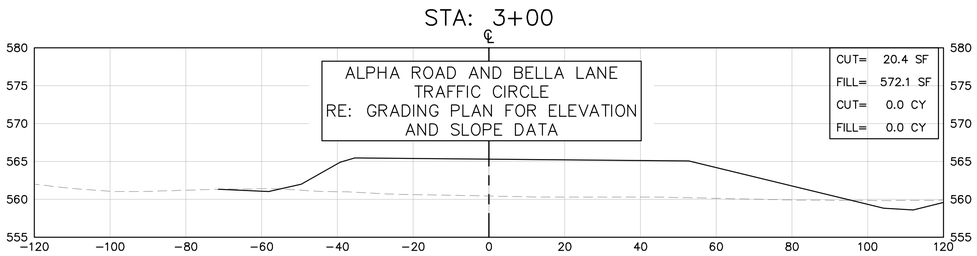


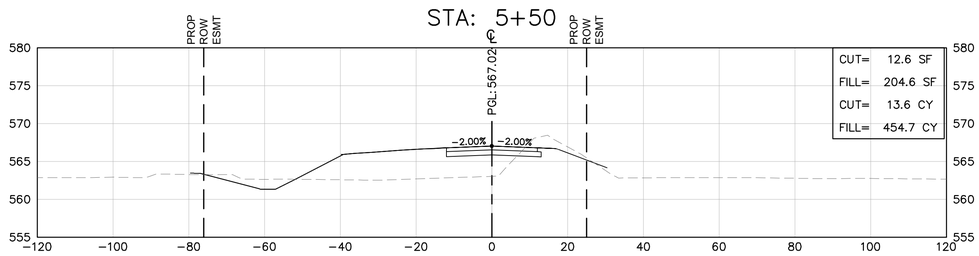


PROJECT NO. 2021-01C/ BID NO. 21-69

| No. | REVISIONS | DATE | BY |
|---|---|---|---|
| | | | |

Kimley»Horn
2201 WEST ROYAL LANE, SUITE 275, IRVING, TX 75063
PHONE: 214-420-5600
WWW.KIMLEY-HORN.COM
© 2021 KIMLEY-HORN AND ASSOCIATES, INC.
TEXAS REGISTERED ENGINEERING FIRM #F-928

9/10/2021

STATE OF TEXAS
RYAN DELMOTTE
114242
LICENSED
PROFESSIONAL ENGINEER

| | |
|---|---|
| KHA PROJECT | 063543031 |
| DATE | 09/10/2021 |
| SCALE | AS SHOWN |
| DESIGNED BY | RMD |
| DRAWN BY | CDS |
| CHECKED BY | LNA |

**TOWN OF ADDISON**
ALPHA ROAD CONN.
FROM FARMERS BRANCH
CREEK TO ALPHA ROAD

CROSS SECTIONS
ALPHA ROAD
CONNECTOR
BEGIN TO STA 7+00

SHEET NUMBER
C12.01

Plotted By: Shadbolt, Cody September 08, 2021 09:21:28am K:\ALC_Civil\063543031_Addison_Alpha_Road_Connector\CADD\PlanSheets\X-Sections-Alpha.dwg
This document, together with the concepts and designs presented herein, as an instrument of service, is intended only for the specific purpose and client for which it was prepared. Reuse of and improper reliance on this document without written authorization and adaptation by Kimley-Horn and Associates, Inc. shall be without liability to Kimley-Horn and Associates, Inc.

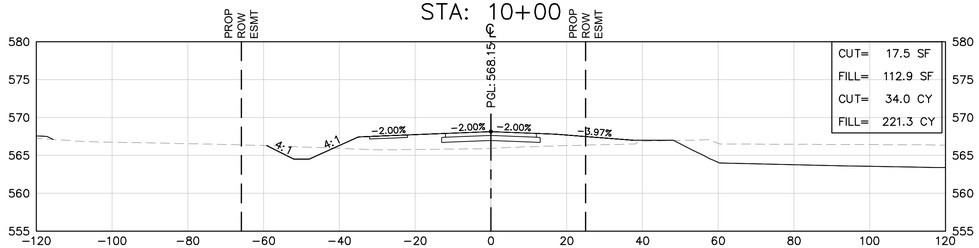


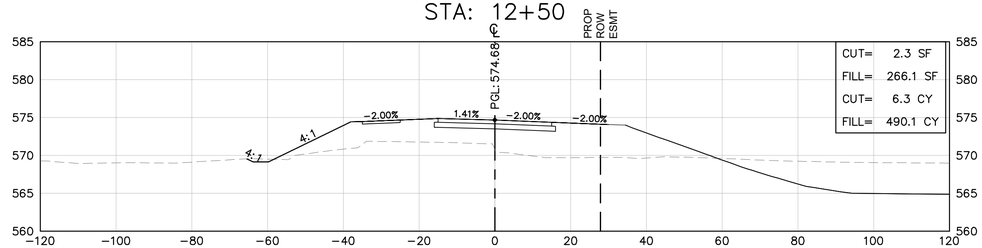


CUT & FILL QUANTITIES SHOWN DO NOT INCLUDE DETENTION POND OR ALPHA CONNECTOR TRAIL

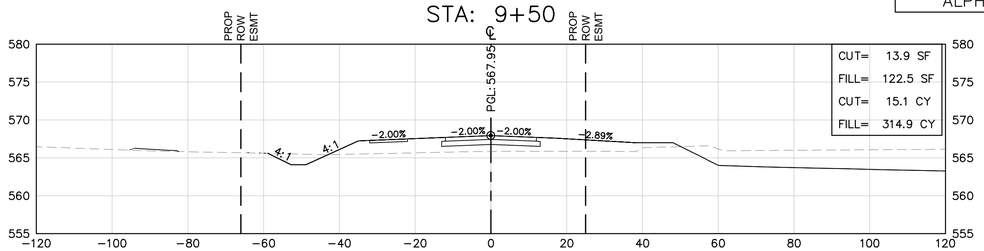


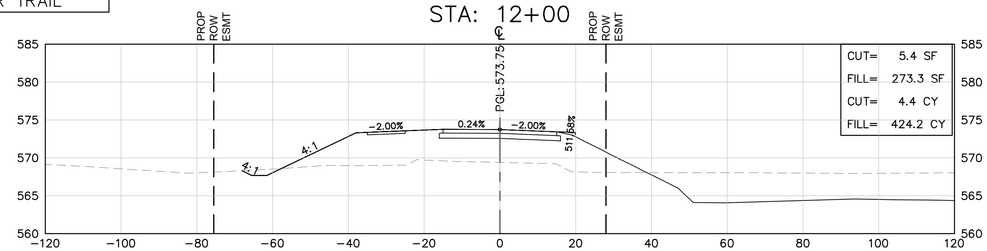


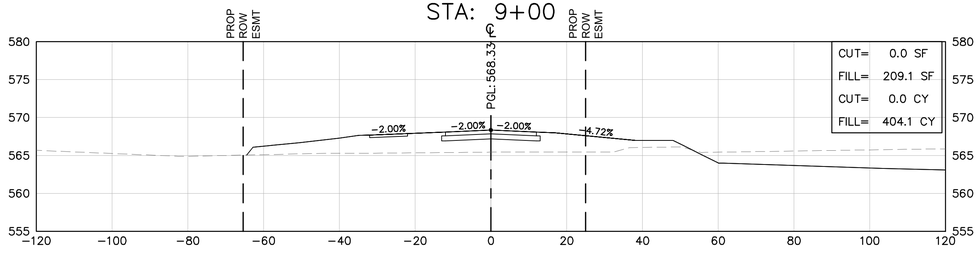


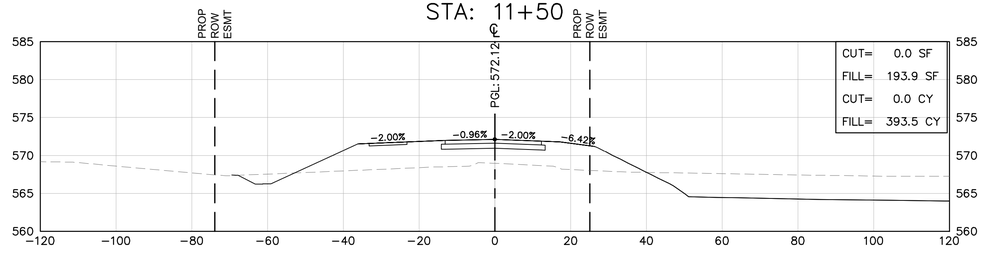


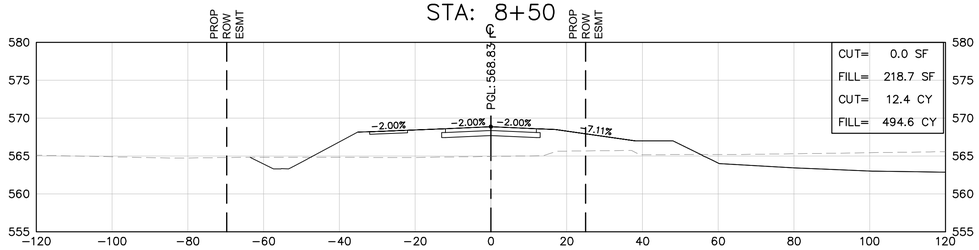


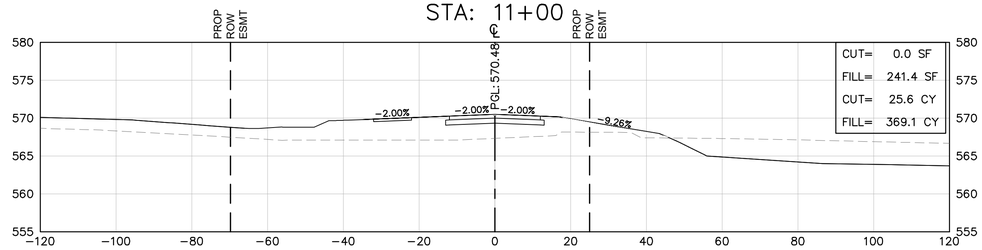


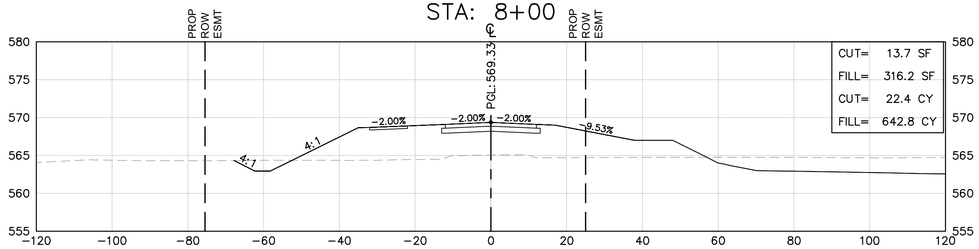


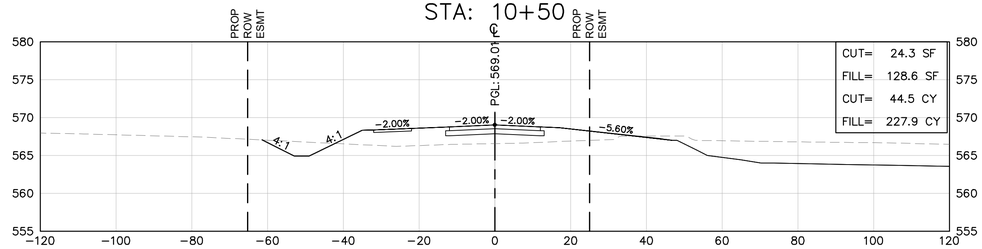


Plotted By: Shadbolt, Cody September 08, 2021 09:21:30am K:\AC...Civil\063543031_Addison_Alpha_Road_Connector\CADD\PlanSheets\X-Sections-Alpha.dwg
This document, together with the concepts and designs presented herein, as an instrument of service, is intended only for the specific purpose and client for which it was prepared. Reuse of and improper reliance on this document without written authorization and adaptation by Kimley-Horn and Associates, Inc. shall be without liability to Kimley-Horn and Associates, Inc.

| No. | REVISIONS | DATE | BY |
|---|---|---|---|

PROJECT NO. 2021-01C/ BID NO. 21-69

Kimley»Horn
2201 WEST ROYAL LANE, SUITE 275, IRVING, TX 75063
PHONE: 214-420-5600
WWW.KIMLEY-HORN.COM
© 2021 KIMLEY-HORN AND ASSOCIATES, INC.
TEXAS REGISTERED ENGINEERING FIRM #F-928

9/10/2021




| | |
|---|---|
| KHA PROJECT | 063543031 |
| DATE | 09/10/2021 |
| SCALE | AS SHOWN |
| DESIGNED BY | RMD |
| DRAWN BY | CDS |
| CHECKED BY | LNA |

**TOWN OF ADDISON**
ALPHA ROAD CONN.
FROM FARMERS BRANCH
CREEK TO ALPHA ROAD

CROSS SECTIONS
ALPHA ROAD
CONNECTOR
STA 7+50 TO STA 11+00

SHEET NUMBER
C12.02

## STA: 3+50

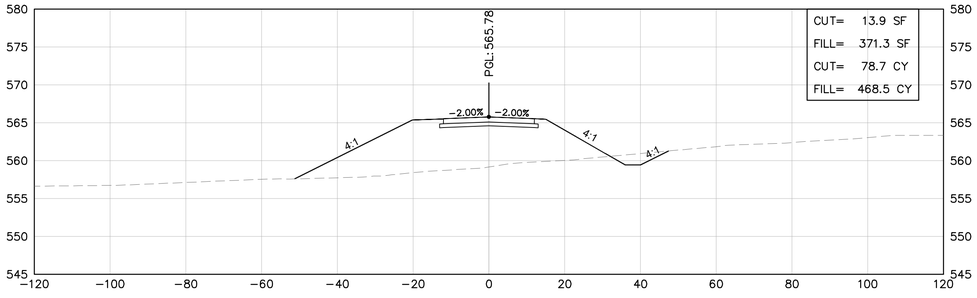


## STA: 5+50

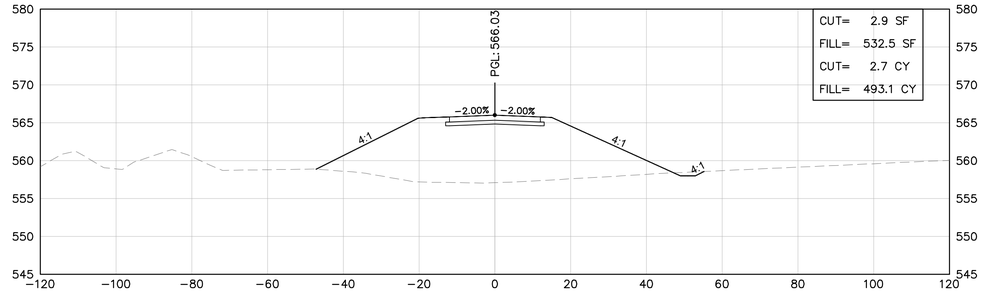


## STA: 3+00

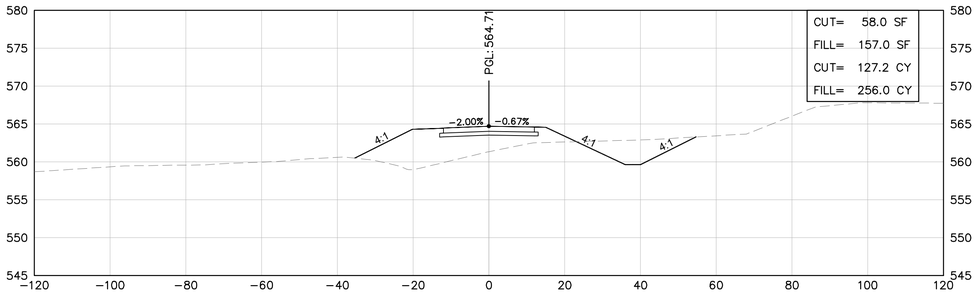


## STA: 5+00

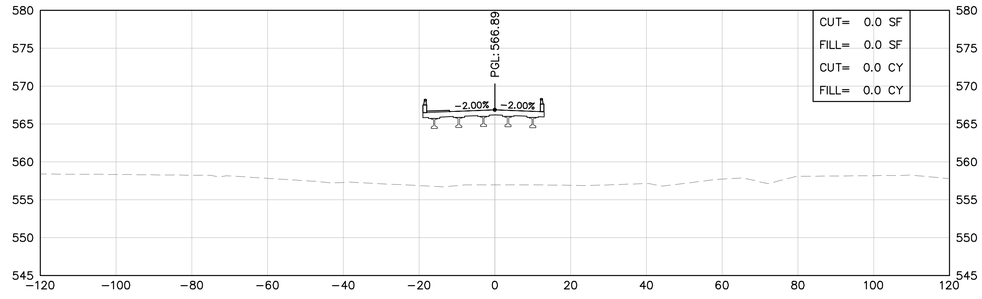


## STA: 2+50

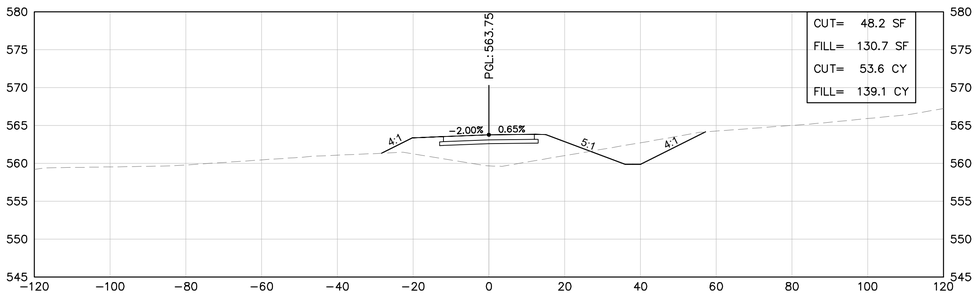


## STA: 4+50

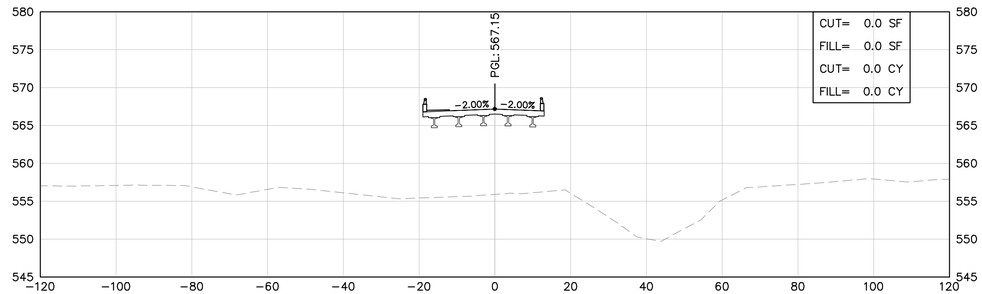


## STA: 2+00

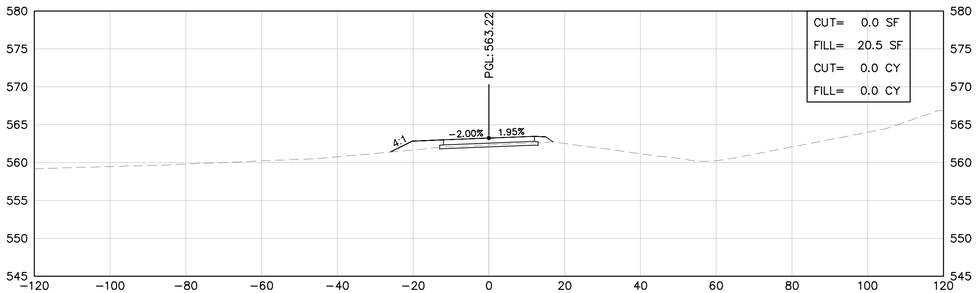


## STA: 4+00

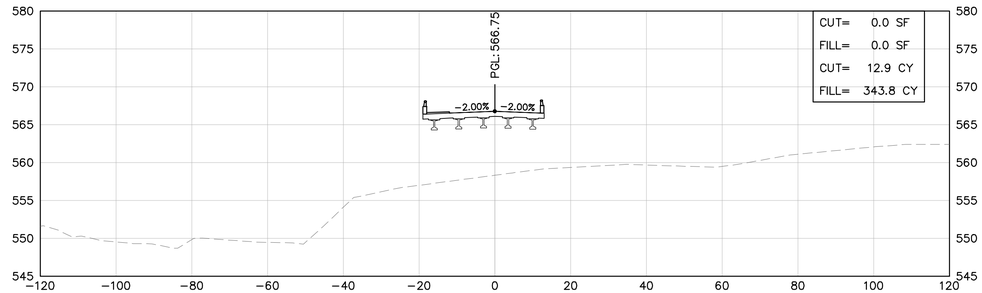


℄ – CENTERLINE
EX – EXISTING
PROP – PROPOSED
PGL – PROFILE GRADE LINE
TCE – TEMPORARY CONSTRUCTION EASEMENT
DE – DRAINAGE EASEMENT
EXISTING GRADE
PROPOSED GRADE

Plotted By:Shadbolt, Cody September 08, 2021 09:21:47am K:\LAC_Civil\063543031_Addison_Alpha_Road_Connector\CADD\PlanSheets\X-Sections-Bella.dwg
This document, together with the concepts and designs presented herein, as an instrument of service, is intended only for the specific purpose and client for which it was prepared. Reuse of and improper reliance on this document without written authorization and adaptation by Kimley-Horn and Associates, Inc. shall be without liability to Kimley-Horn and Associates, Inc.

| No. | REVISIONS | DATE | BY |
|---|---|---|---|

PROJECT NO. 2021-01C/ BID NO. 21-69

Kimley»Horn
2201 WEST ROYAL LANE, SUITE 275, IRVING, TX 75063
PHONE: 214-420-5600
WWW.KIMLEY-HORN.COM
© 2021 KIMLEY-HORN AND ASSOCIATES, INC.
TEXAS REGISTERED ENGINEERING FIRM #F-928

9/10/2021

STATE OF TEXAS
RYAN DELMOTTE
114242
LICENSED
PROFESSIONAL ENGINEER

KHA PROJECT 063543031
DATE 09/10/2021
SCALE AS SHOWN
DESIGNED BY RMD
DRAWN BY CDS
CHECKED BY LNA

# TOWN OF ADDISON
ALPHA ROAD CONN.
FROM FARMERS BRANCH
CREEK TO ALPHA ROAD

# CROSS SECTIONS
BELLA LANE
EXTENSION
BEGIN TO STA 5+50

SHEET NUMBER
C12.03

Plotted By: Shadbolt, Cody September 08, 2021 09:21:48am K:\LAC_Civil\063543031_Addison_Alpha_Road_Connector\CADD\PlanSheets\X-Sections-Bella.dwg
This document, together with the concepts and designs presented herein, as an instrument of service, is intended only for the specific purpose and client for which it was prepared. Reuse of and improper reliance on this document without written authorization and adaptation by Kimley-Horn and Associates, Inc. shall be without liability to Kimley-Horn and Associates, Inc.

## STA: 7+50

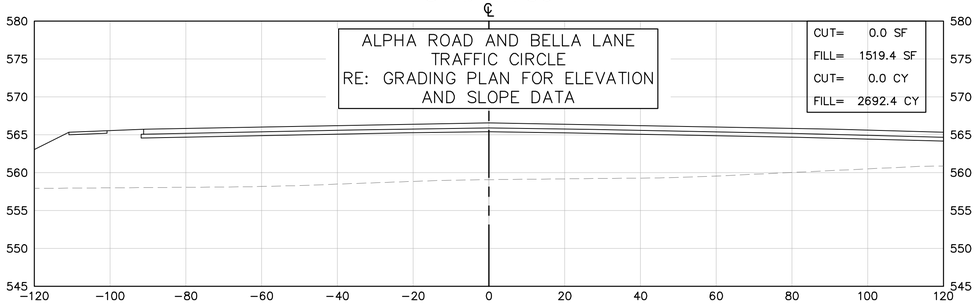


## STA: 7+00

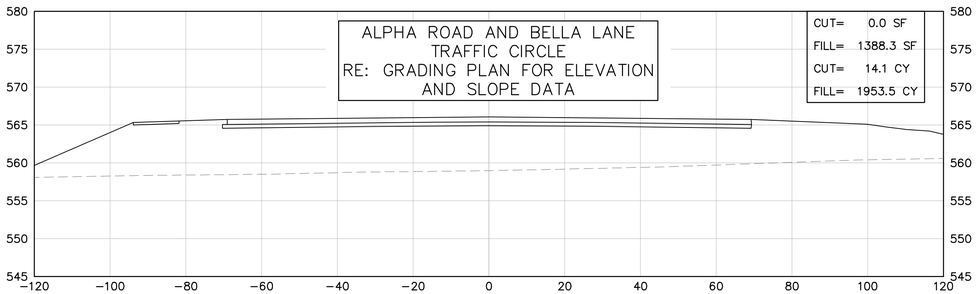


## STA: 6+50

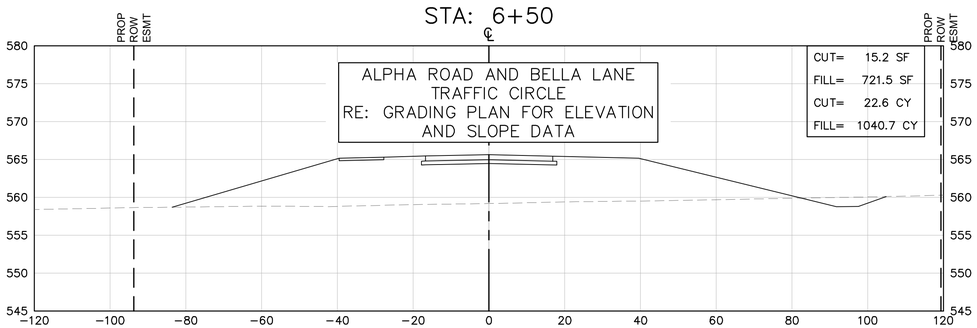


## STA: 6+00

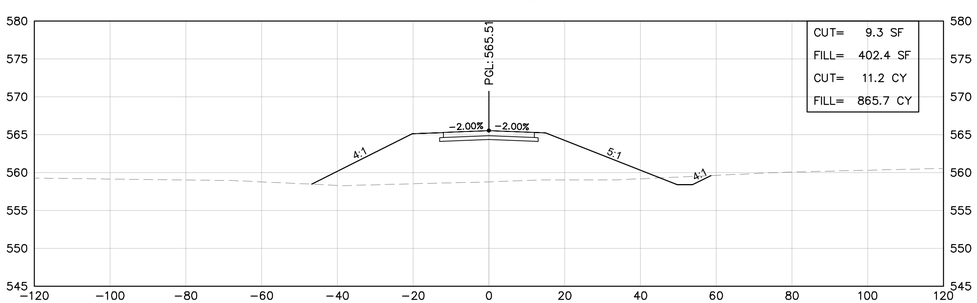


## STA: 9+50

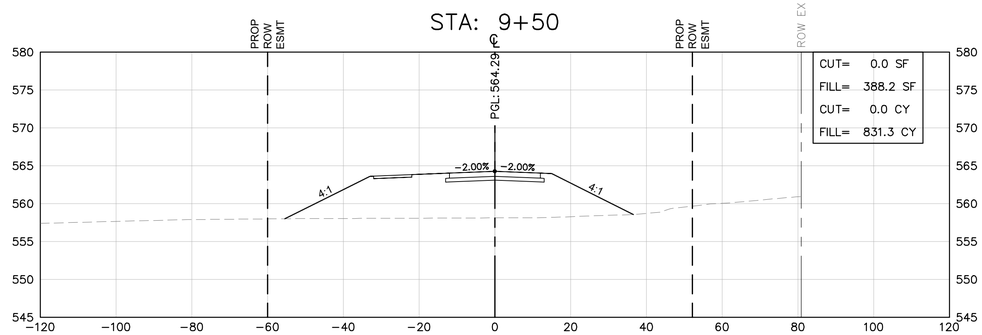


## STA: 9+00

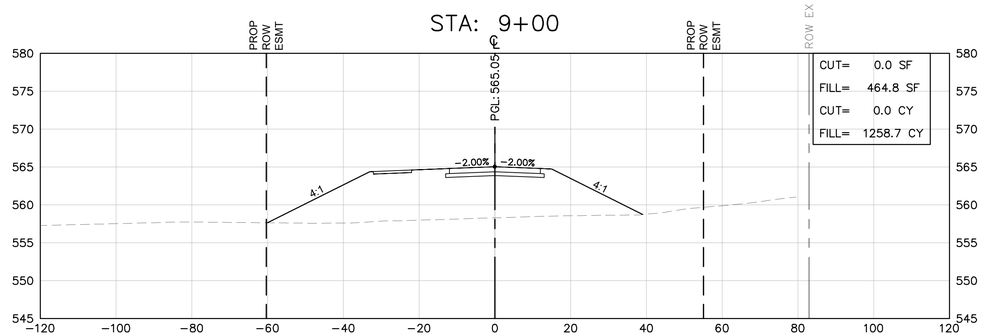


## STA: 8+50

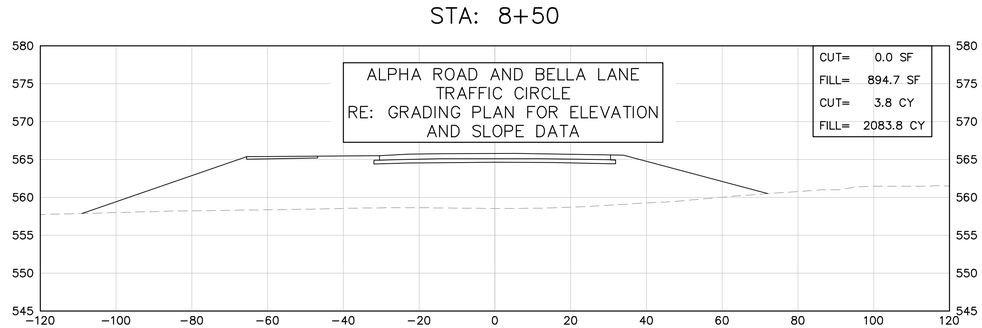


## STA: 8+00

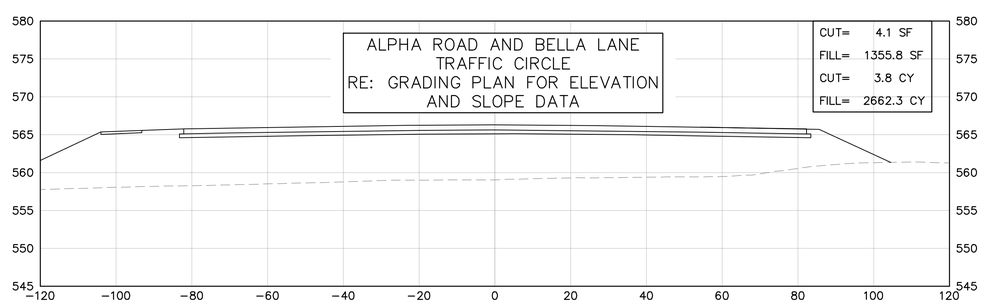


℄ – CENTERLINE
EX – EXISTING
PROP – PROPOSED
PGL – PROFILE GRADE LINE
TCE – TEMPORARY CONSTRUCTION EASEMENT
DE – DRAINAGE EASEMENT
EXISTING GRADE – – – –
PROPOSED GRADE ——

| No. | REVISIONS | DATE | BY |
|---|---|---|---|
| | | | |

PROJECT NO. 2021-01C/ BID NO. 21-69

Kimley»Horn
2201 WEST ROYAL LANE, SUITE 275, IRVING, TX 75063
PHONE: 214-420-5600
WWW.KIMLEY-HORN.COM
© 2021 KIMLEY-HORN AND ASSOCIATES, INC.
TEXAS REGISTERED ENGINEERING FIRM #F-928

9/10/2021




| KHA PROJECT | DATE | SCALE | DESIGNED BY | DRAWN BY | CHECKED BY |
|---|---|---|---|---|---|
| 063543031 | 09/10/2021 | AS SHOWN | RMD | CDS | LNA |

**TOWN OF ADDISON**
ALPHA ROAD CONN.
FROM FARMERS BRANCH
CREEK TO ALPHA ROAD

# CROSS SECTIONS
BELLA LANE
EXTENSION
STA 6+00 TO 9+50

SHEET NUMBER
C12.04

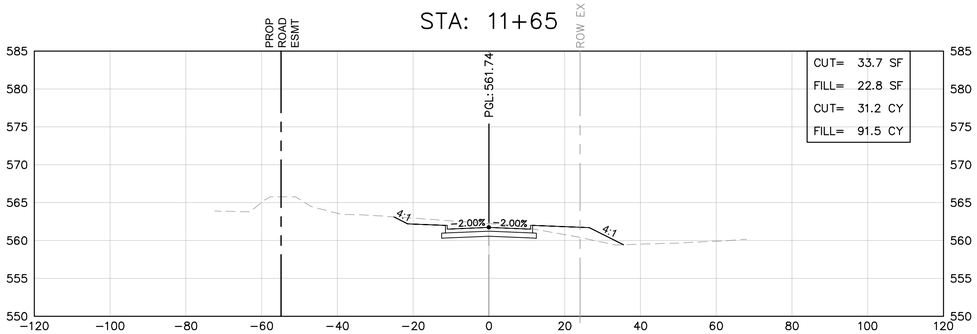


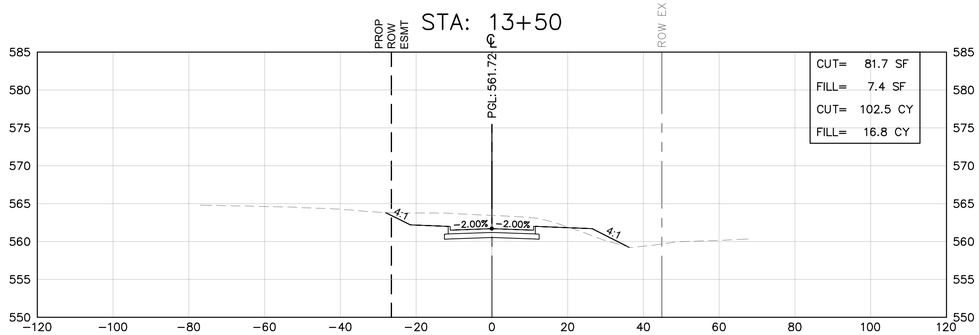


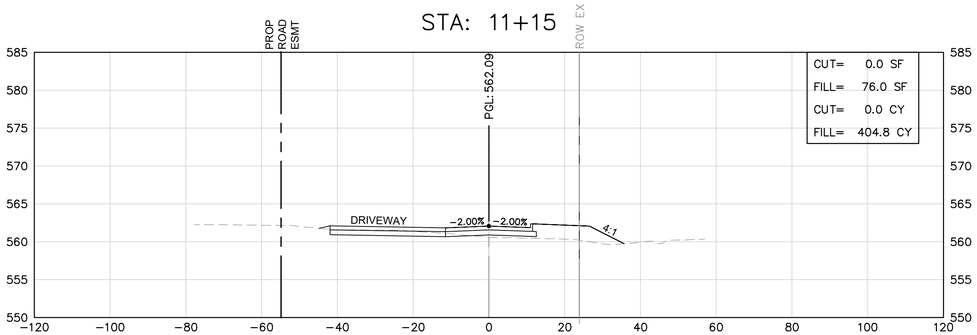


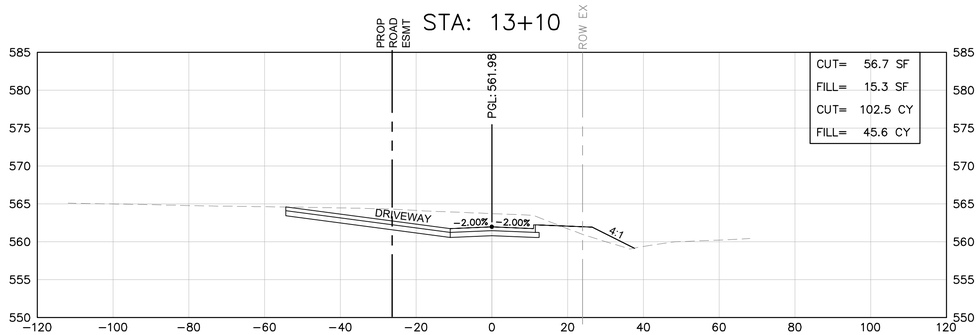


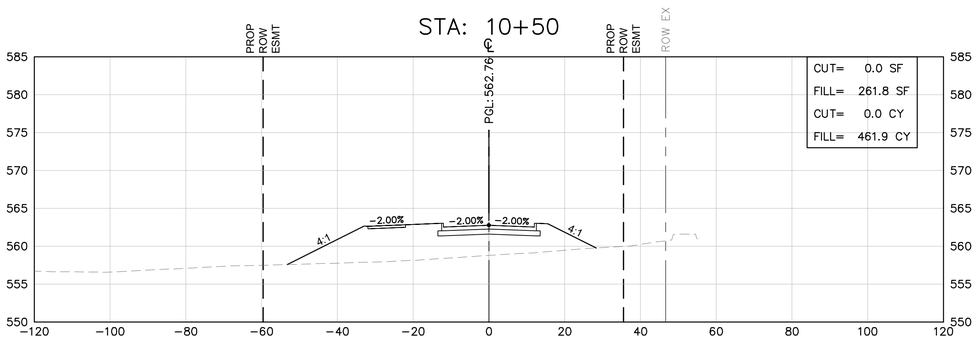


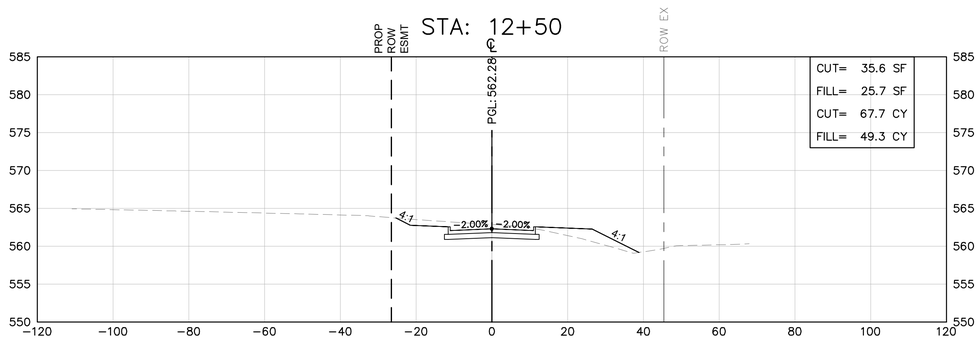


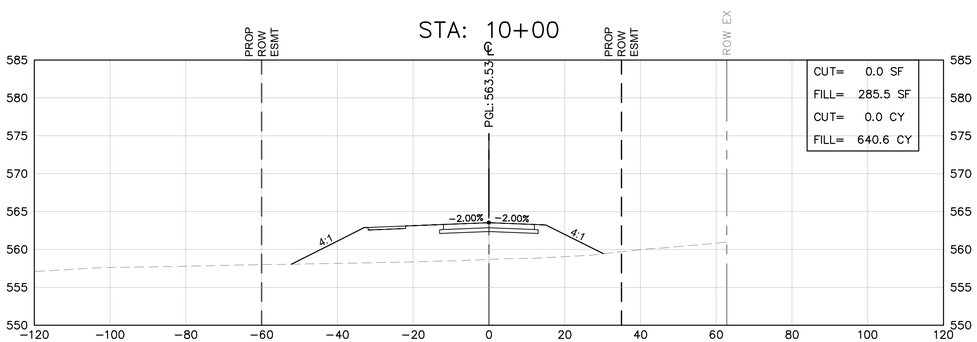


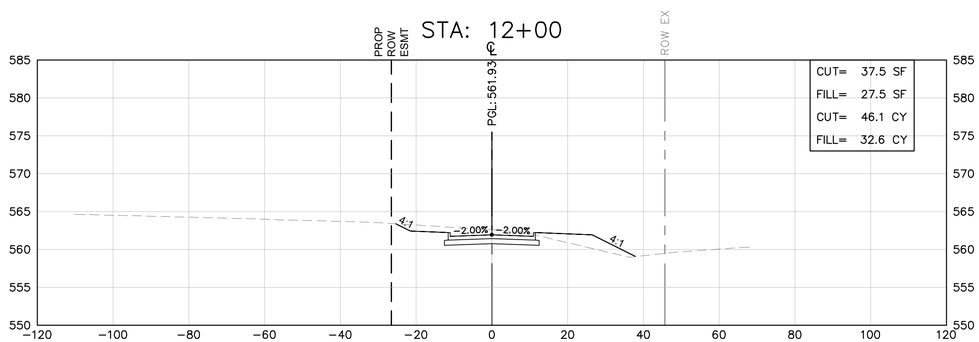


℄ – CENTERLINE
EX – EXISTING
PROP – PROPOSED
PGL – PROFILE GRADE LINE
TCE – TEMPORARY CONSTRUCTION EASEMENT
DE – DRAINAGE EASEMENT
EXISTING GRADE
PROPOSED GRADE

PROJECT NO. 2021-01C/ BID NO. 21-69

| No. | REVISIONS | DATE | BY |
|---|---|---|---|
| | | | |

Kimley»Horn
2201 WEST ROYAL LANE, SUITE 275, IRVING, TX 75063
PHONE: 214-420-5600
WWW.KIMLEY-HORN.COM
© 2021 KIMLEY-HORN AND ASSOCIATES, INC.
TEXAS REGISTERED ENGINEERING FIRM #F-928

9/10/2021

STATE OF TEXAS
RYAN DELMOTTE
114242
LICENSED
PROFESSIONAL ENGINEER

| KHA PROJECT 063543031 | DATE 09/10/2021 | SCALE AS SHOWN | DESIGNED BY RMD |
|---|---|---|---|
| | | DRAWN BY CDS | CHECKED BY LNA |

# TOWN OF ADDISON
## ALPHA ROAD CONN. FROM FARMERS BRANCH CREEK TO ALPHA ROAD

# CROSS SECTIONS
## BELLA LANE EXTENSION
STA 10+00 TO END

SHEET NUMBER
C12.05

Plotted By: Shadbolt, Cody September 08, 2021 09:21:50am K:\LAC_Civil\063543031_Addison_Alpha_Road_Connector\CADD\PlanSheets\X-Sections-Bella.dwg
This document, together with the concepts and designs presented herein, as an instrument of service, is intended only for the specific purpose and client for which it was prepared. Reuse of and improper reliance on this document without written authorization and adaptation by Kimley-Horn and Associates, Inc. shall be without liability to Kimley-Horn and Associates, Inc.

ADDISON PUBLIC WORKS & ENGINEERING SERVICES

SPECIFICATIONS AND CONTRACT DOCUMENTS

FOR THE CONSTRUCTION OF

# BELLA LANE SOUTH EXTENSTION & ALPHA ROAD CONNECTOR

TOWN OF ADDISON, TEXAS
PUBLIC WORKS AND ENGINEERING SERVICES
BID NUMBER 21-69

SEPTEMBER 2021

PREPARED BY

Kimley»Horn

2201 West Royal Lane, Ste. 275

Irving, Texas 75063
(214) 420-5600



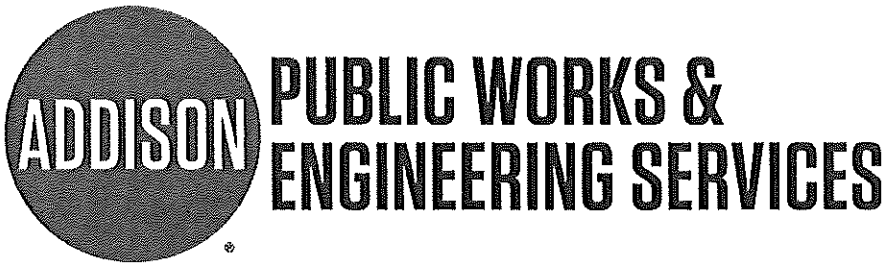


# TOWN OF ADDISON, TEXAS

## MAYOR

**Joe Chow**

## MAYOR PRO TEM:

**Guillermo Quintanilla**

## DEPUTY MAYOR PRO TEM:

**Paul Walden**

## COUNCIL MEMBERS

**Tom Braun**

**Lori Ward**

**Kathryn Wheeler**

**Marlin Willesen**

## CITY MANAGER

**Wesley S. Pierson**

## DIRECTOR OF PUBLIC WORKS AND ENGINEERING SERVICES

**Shannon Hicks, P.E.**

# TABLE OF CONTENTS


| | |
|---|---|
| **Section AB** | **Advertisement for Bids** |
| **Section IB** | **Instructions to Bidders** |
| **Section PF** | **Proposal Form** |
| **Section BB** | **Bid Bond** |
| **Section BQS** | **Bidder Qualification Statement** |
| **Section CA** | **Contract Agreement** |
| **Section PrB** | **Performance Bond** |
| **Section PyB** | **Payment Bond** |
| **Section MB** | **Maintenance Bond** |
| **Section BP** | **Contractor's Affidavit of Bills Paid** |
| **Section GP** | **General Provisions**<br>***Standard Specifications for Public Works Construction – North Central Texas (5th Edition, 2017)*** |
| **Section SP** | **Special Provisions** |
| **Section PS** | **Project Sign** |
| **Section TS** | **Technical Specifications**<br>***Special Specification 7076: Grouting of Water Mains*** |
| **Section IS** | **Additional Insurance Requirements, Town of Addison** |

**Appendix A** **Geotechnical Study**

*Alpha Road Connector – Vitruvian Phase IV (Report: 20212439.001A/DFW20R119268)*

**SECTION AB**

# ADVERTISEMENT FOR BIDS

# ADVERTISEMENT FOR BIDS

1. The Town of Addison is requesting bids for the Bid of the Bella Lane South Extension and Alpha Road Connector. **Bids will be accepted until 2:00 p.m., Thursday, October 21, 2021** at the Finance Building, 5350 Belt Line Rd., Dallas, Texas 75254 – Attention Purchasing Department, at which time responders names and bids will be publicly read aloud. Late bids will not be considered. The plans, specifications, quantities, pre-bid time and date, and other information are available on www.civcastusa.com. The plans, specifications, and quantities for the work to be done are also on file with Public Works & Engineering Services Department, Town of Addison, 16801 Westgrove Drive, Addison, Texas 75001, and such plans, specifications, and quantities may be examined without charge. The Town of Addison reserves the right to waive any formalities, to reject any and all bids, and to select the proposal deemed most advantageous to the Town of Addison.

2. The Contractor shall identify his bid on the outside of the envelope by writing the words **PUBLIC WORKS AND ENGINEERING SERVICES BID NUMBER 21-69, BELLA LANE SOUTH EXTENSION & ALPHA ROAD CONNECTOR.**

   PAPER BIDS SHALL BE REQUIRED. AN ELECTRONIC COPY OF THE BID SHALL BE INCLUDED IN THE ENVELOPE WHEN THE PAPER BID IS SUBMITTED. A USB DRIVE IS PREFERRED.

3. Bids shall be accompanied by a bid bond in the same amount from a reliable surety company licensed by the State of Texas to act as a Surety and be listed on the current U.S. Treasury Listing of Approved Sureties, or a Binder of Insurance executed by a surety company licensed by the State of Texas to act as a surety or its authorized agent as a guarantee that the bidder will enter into a contract and execute a Performance Bond within ten (10) days after notice of award of contract to him.

4. Plans, specifications and bidding documents may be downloaded from www.civcastusa.com. The Town of Addison is a "free buyer", meaning that prospective bidders need only a free registration to sign up for plan updates. Bidders assume all risk for acquiring specs and/or plans from third party sites and plan rooms, as only www.civcastusa.com will be directly updated by Addison.

5. The right is reserved by the Mayor and the City Council as the interests of the City may require to reject any or all bids and to waive any formality in bids received and to select the proposal deemed most advantageous to the City.

6. The Bidder (Proposer) must supply all the information required by the Proposal Form.

7. A Performance Bond, Labor and Material Payment Bond, and Maintenance Bond will be required by the Owner; each Bond shall be in the amount of 100% of the total contract amount. Bonds shall be issued by a surety company licensed by the State of Texas to act as a Surety and be listed on the current U.S. Treasury Listing of Approved Sureties.

8. The Bidder (Proposer) must supply all the information required by the Bidder Qualification Statement.

9. **An optional pre-bid meeting will be held on Thursday, October 7, 2021 at 2:00pm in the The Town of Addison Service Center 16801 Westrgrove Drive, Addison, Texas 75001 A site visit will follow this meeting.**

10. For information on bidding or work to be performed, please submit all questions on www.civcastusa.com. **All questions must be received by 5:00pm on Wednesday, October 13, 2021. All questions received by this deadline will be answered by 5:00pm on Monday, October 18, 2021.**

11. **The project consists of constructing the extension of Bella Lane South from Vitruvian Park to Windmill Circle and connection to Alpha Road from Farmers Branch Creek. The improvements include, but are not limited to, subgrade preparation, concrete pavement, storm sewer pipe, storm sewer structure, water line, bridge construction, and detention pond construction.**

**SECTION IB**

# INSTRUCTIONS TO BIDDERS

# INSTRUCTIONS TO BIDDERS

A. **PROJECT: BELLA LANE SOUTH EXTENSION & ALPHA ROAD CONNECTOR,** in the Town of Addison. The bids will be evaluated as stated in Section "O" of these Instructions to Bidders.

B. **PROJECT DESCRIPTION: The project consists of constructing the extension of Bella Lane South from Vitruvian Park to Windmill Circle and connection to Alpha Road from Farmers Branch Creek. The improvements include, but are not limited to, subgrade preparation, concrete pavement, storm sewer pipe, storm sewer structure, water line, bridge construction, and detention pond construction.**

C. **PROPOSALS:** Proposals must be in accordance with these instructions in order to receive consideration.

D. **DOCUMENTS:** Reference the Contract Agreement for a listing of Contract Documents to be included for this project.

E. **EXAMINATION OF DOCUMENTS AND SITE:** Bidders shall carefully examine the Bidding Documents and the construction site to obtain firsthand knowledge of the scope and the conditions of the Work. Each Contractor, Subcontractor and Sub-subcontractor, by submitting a proposal to perform any portion of the Work, represents and warrants that he has examined the Contract Documents and the site of the Work, and from his own investigation has satisfied himself as to the scope, accessibility, nature and location of the Work; the character of the equipment and other facilities needed for the performance of the Work; the character and extent of other work to be performed; the local conditions; labor availability, practices and jurisdictions; and other circumstances that may affect the performance of the Work. No additional compensation will be allowed by the Owner for the failure of such Contractor, Subcontractor or Sub-subcontractor to inform himself as to conditions affecting the Work.

F. **INTERPRETATION OF DOCUMENTS:** If any person contemplating submitting a bid for the proposed Contract is in doubt as to the meaning of any part of the Drawings, Specifications (Project Manual) or other proposed Contract Documents, he may submit questions to the Town of Addison, no later than 5:00pm on Wednesday, October 13, 2021. All questions received by this deadline will be answered by 5:00pm on Monday, October 18, 2021. Bidders should act promptly and allow sufficient time for a reply to reach them before preparing their bids. Any interpretation or clarification will be in the form of an Addendum duly issued. No alleged verbal interpretation or ruling will be held binding upon the Owner.

G. **SUBSTITUTIONS:** Conditions governing the submission of substitutions for specific materials, products, equipment and processes are in the Special Provisions. Requests for substitutions must be received by the Town of Addison seven (7) calendar days prior to the established bid date.

H. **ADDENDA:** Interpretations, clarifications, additions, deletions and modifications to the Documents during the bidding period will be issued in the form of Addenda and a copy of

such Addenda will be released through www.civcastusa.com. It will be the responsibility of each person who has been issued a set of bid documents to secure all Addenda from www.civcastusa.com. Addenda will be a part of the Bidding Documents and the Contract Documents, and receipt of them shall be acknowledged in the Bid Form. All such interpretations and supplemental instructions will be in the form of written addenda to the contract documents which, if issued, will be released through www.civcastusa.com not later than three (3) calendar days prior to the date fixed for the opening of bids. If any bidder fails to acknowledge the receipt of such addenda in the space provided in the bid form, his bid will nevertheless be construed as though the receipt of such addenda had been acknowledged.

I. The Town may consider more factors than just price in awarding a the contract in accordance with the requirements for competitive bidding under the Local Government Code Section 252.043. The criteria that will be considered are:

- the price;
- the offeror's experience and reputation;
- the quality of the offeror's goods or services;
- the impact on the ability of the Town to comply with rules relating to historically underutilized businesses;
- the offeror's safety record;
- the offeror's proposed personnel;
- whether the offeror's financial capability is appropriate to the size and scope of the project; and
- any other relevant factor specifically listed in the request for bids, proposals, or qualifications

J. **COMPLETION TIME:** The selected contractor shall use the time period between the awarding of the contract at Town Council and the date of Notice to Proceed to submit materials and shop drawings for approval by **Kimley-Horn and Associates.** **Kimley- Horn** shall review and return these submittals in the most expedient manner possible to accommodate immediate material ordering.

a. Upon receiving Notice to Proceed, the selected contractor shall have **330 calendar days** to construct the project and achieve substantial completion. Substantial completion for this project includes the following items:
    i. Preliminary Punchlist walk-through with the Town performed.
b. After substantial completion is reached, the contractor shall have **an additional 20 calendar days to** achieve 100% final completion. Final completion for this project shall include:
    i. Punchlist items completed and approved by the Town;
    ii. Site clean-up;
    iii. Submittal of Record Drawings; and
    iv. Execution of Maintenance Bond.

**K. PREPARATION OF BIDS:** Prices quoted shall include all items of cost, expense, taxes, fees and charges incurred by, or arising out of, the performance of the work to be performed under the Contract. Bids shall be submitted in duplicate and shall be signed in ink. Any bid on other than the required form will be considered informal and may be rejected. Erasures or other changes in a bid must be explained or noted over the initials of the bidder. Bids containing any conditions, omissions, unexplained erasures and alterations, or irregularities of any kind may be rejected as informal. The prices should be expressed in words and figures or they may be deemed informal and may be rejected. In case of discrepancy between the price written in the bid and that given in the figures, the price in writing will be considered as the bid. In the case of a discrepancy between a unit price and its extension, the unit price will govern. Failure to submit all requested information will make a bid irregular and subject to rejection. Bids shall be signed with name typed or printed below signature, and, if a partnership, give full name of all partners. Where bidder is a corporation, bids must be signed with the legal name of the corporation followed by the name of the state of incorporation and the legal signature of an officer authorized to bind the corporation to a contract.

**L. SUBMITTAL OF BIDS:** Sealed proposals will be received at the time, date and place stated in the Advertisement for Bids. Proposals shall be made on unaltered Proposal Forms furnished by the Town of Addison. Bidders shall submit proposals in an opaque, sealed envelope addressed to the Owner and plainly mark on the outside of the envelope the name and address of the bidder. The envelopes shall also be marked with the following project description:

**PUBLIC WORKS AND ENGINEERING SERVICES BID NUMBER 21-69**

**BELLA LANE SOUTH EXTENSTION & ALPHA ROAD CONNECTOR**

An electronic copy of the bid shall be included in the envelope when the paper copy bid is submitted. A USB drive is preferred.

The Bid Bond must be completed and signed by each bidder and submitted with the bid. Submit Bids by mail or in person prior to the time for receiving bids set forth in the Advertisement for Bids issued by the Town.

Electronic bidding on www.civcastusa.com will not be considered for this project. The Town of Addison uses www.civcastusa.com to distribute bids and proposals. There will be NO COST to the contractor for the use of www.civcastusa.com.

**M. MODIFICATION AND WITHDRAWAL OF BIDS:** Prior to the time set for bid opening, bids may be withdrawn or modified. Bids may be modified only on the official bid form and must be signed by a person legally empowered to bind the bidder. No bidder shall modify, withdraw, or cancel his bid or any part thereof for sixty (60) calendar days after the time agreed upon for the receipt of bids.

**N. DISQUALIFICATION:** The Owner reserves the right to disqualify proposals, before or after the opening, upon evidence of collusion with intent to defraud or other illegal practices relating to this proposal upon the part of the bidder.

**O. SUBMISSION OF POST-BID INFORMATION:** Upon notification of acceptance, the selected bidder shall, within twenty-four (24) hours, submit the following:

1. A designation of the portions of the Work proposed to be performed by the bidder with his own force.
2. A list of names of the Subcontractors or other persons or organizations, including those who are to furnish materials and equipment fabricated to a special design proposed for such portions of the Work as may be designated in the Bidding Documents or as may be requested by the Town of Addison. The bidder will be required to establish to the satisfaction of the Owner the reliability and responsibility of the proposed Subcontractors and suppliers to furnish and perform the Work.
3. Other information as required.

**P. AWARD:** The Owner reserves the right to accept any or to reject any bids without compensation to bidders and to waive irregularities and informalities. The Town of Addison Public Works & Engineering Services Department, in making its recommendation, will consider the following elements:

1. Whether the bidder is a contractor with experience in the type of work involved.
2. Whether the bidder has adequate plant, equipment and personnel to perform the work properly and expeditiously.
3. Whether the bidder has a suitable financial status and reputation for meeting obligations incident to work of the kind specified.
4. Whether the bidder has complied with the terms and conditions.

Alternate items may or may not be awarded. Addition or deletion of other items or schedules will be governed by the *Standard Specifications for Public Works Construction – North Central Texas, November 2017, 5th Edition*, (hereinafter called SSPWC) Item 104.2 "Change or Modification of Contract".

**Q. EXECUTION OF THE CONTRACT:** The successful bidder will be required to enter into a contract with the Owner within ten (10) days of notice by the Owner that his bid has been accepted. Failure to enter into a contract within the established time limit shall be considered grounds for forfeiture of the bid bond.

**R. CONSTRUCTION SCHEDULE:** It is the Owner's desire to have the project completed and operational in as short a time as possible. The number of calendar days for completion of the project will begin with the date specified in the Notice to Proceed. The Notice to Proceed will be issued in a manner to facilitate a smooth construction of the project. The Contractor shall begin construction within ten (10) calendar days of the issuance of the Notice to Proceed.

**S. COST PLUS TIME BIDDING:** N/A

**T. FORM OF CONTRACT:** The contract for the construction of the project will be drawn up by the Owner. A sample form of agreement is included in the Contract Agreement Section.

**U. BONDS:** A Performance Bond, a Labor and Material Payment Bond and a Maintenance Bond will be required by the Owner. The Performance Bond and Payment Bond shall name the Town of Addison, and others as directed by the Town, as joint obligees. Sample forms have

been included in the Performance Bond, Payment Bond, and Maintenance Bond sections. (Contractor shall confirm the legal names of obligees prior to execution of Bonds.)

V. **BID SECURITY:** Bids shall be accompanied by a bid bond in the same amount from a surety company licensed to do business in the State of Texas as a guarantee that the bidder will enter into a contract and execute a Performance Bond and Payment Bond within ten (10) calendar days after notice of award of contract to him. Such bid bonds will be returned to all except the three lowest bidders within three (3) days after the opening of bids, and the remaining bid bonds will be returned promptly after the Owner has made an award of contract, or, if no award has been made within thirty (30) calendar days after the date of the opening of bids, upon demand of the bidder at any time thereafter, so long as he has not been notified of the acceptance of his bid.

W. **RESOLUTIONS:** If the bidder is a corporation, a copy of the resolution empowering the person submitting the bid to bind the bidder must be included with the bid.

X. **CONSTRUCTION STAKING:** Construction staking and re-staking will not be provided by the Owner. Benchmarks and Horizontal Control are shown on the plans. There is no separate bid item for staking, therefore, the contractor must include value for staking in the various bid items as subsidiary to the contract. Any staking or re-staking that is required shall be the responsibility of the Contractor and shall be at no cost to the Owner.

Y. **FINAL PAYMENT:** The general provisions for Final Payment shall be as stated in Item 109.5.4 of the SSPWC including all Amendments and Additions. Prior to final payment the Contractor shall provide the Owner with the following items:

1. A Contractor's Affidavit of Bills Paid in accordance with Section BP.
2. A Consent of Surety Company to Final Payment.
3. A complete set of record plans which indicate all construction variations from the original construction documents in accordance with the Special Provisions.
4. A Two (2) years Maintenance Bond in accordance with Section MB.
5. Acknowledgement that the project has been reviewed and accepted by TDLR.

Z. **PREVAILING WAGE RATES:** Wage rates paid on this project shall not be less than specified in the schedule of general prevailing rates of per diem wages as attached in the Special Provisions.

AA. **PRIORITY OF CONTRACT DOCUMENTS:** Reference the Contract Agreement for information regarding the priority of Contract Documents.

SECTION PF-1

# PROPOSAL FORM

# PROPOSAL FORM

October 21, 2021

TO: The Honorable Mayor and Town Council
Town of Addison, Texas

Gentlemen:

The undersigned bidder, having examined the plans, specifications and contract documents, and the location of the proposed work, and being fully advised as to the extent and character of the work, proposes to furnish all equipment and to perform labor and work necessary for completion of the work described by and in accordance with the Plans, Specifications and Contract for the following prices, to wit:

Signed by: _____

ACKNOWLEDGMENT OF ADDENDA:

The Bidder acknowledges receipt of the following addenda:

Addendum No. 1 _____

Addendum No. 2 _____

Addendum No. 3 _____

The following pages contain all bid items for:

BID SCHEDULE – BELLA LANE SOUTH EXTENSION & ALPHA ROAD CONNECTOR
BID NUMBER 21-69

| Item No. | Name of Pay Item with Unit Price in Words | Est. Quantity | Unit | Unit Bid Price | Amount Bid |
|---|---|---|---|---|---|
| **BASE BID - STREET IMPROVEMENTS** | | | | | |
| **P1** | **MOBILIZATION (5% MAX)** | **1** | **LS** | | |
| | Complete in Place, for the Sum of<br>ONE HUNDRED TWENTY FIVE THOUSAND<br>Dollars and<br>ZERO Cents per unit | | | $ 125,000.00 | $ 125,000.00 |
| **P2** | **BARRICADES, SIGNS, AND TRAFFIC HANDLING** | **1** | **LS** | | |
| | Complete in Place, for the Sum of<br>ONE HUNDRED FIFTY THREE THOUSAND, FOUR HUNDRED<br>Dollars and<br>ZERO Cents per unit | | | $ 153,400.00 | $ 153,400.00 |
| **P3** | **PROJECT SIGN** | **2** | **EA** | | |
| | Complete in Place, for the Sum of<br>FIVE HUNDRED FIFTY<br>Dollars and<br>ZERO Cents per unit | | | $ 550.00 | $ 1,100.00 |
| **P4** | **GENERAL SITE PREPARATION** | **1** | **LS** | | |
| | Complete in Place, for the Sum of<br>ONE HUNDRED EIGHTY SIX THOUSAND<br>Dollars and<br>ZERO Cents per unit | | | $ 186,000.00 | $ 186,000.00 |
| **P5** | **REMOVE EX HEADWALL** | **1** | **EA** | | |
| | Complete in Place, for the Sum of<br>ONE THOUSAND EIGHT HUNDRED NINETY<br>Dollars and<br>ZERO Cents per unit | | | $ 1,890.00 | $ 1,890.00 |
| **P6** | **REMOVAL OF EX RCP** | **19** | **LF** | | |
| | Complete in Place, for the Sum of<br>ELEVEN<br>Dollars and<br>FIFTY FIVE Cents per unit | | | $ 11.55 | $ 219.45 |
| **P7** | **REMOVE EXISTING CONCRETE SIDEWALK/RAMPS** | **425** | **SY** | | |
| | Complete in Place, for the Sum of<br>SEVEN<br>Dollars and<br>THIRTY FIVE Cents per unit | | | $ 7.35 | $ 3,123.75 |
| **P8** | **REMOVE EXISTING ASPHALT PAVEMENT** | **480** | **SY** | | |
| | Complete in Place, for the Sum of<br>NINE<br>Dollars and<br>NINETY EIGHT Cents per unit | | | $ 9.98 | $ 4,790.40 |
| **P9** | **REMOVE EXISTING TREES** | **116** | **EA** | | |
| | Complete in Place, for the Sum of<br>THREE HUNDRED FIFTEEN<br>Dollars and<br>ZERO Cents per unit | | | $ 315.00 | $ 36,540.00 |
| **P10** | **UNCLASSIFIED STREET EXCAVATION** | **1** | **LS** | | |
| | Complete in Place, for the Sum of<br>THREE THOUSAND SIX HUNDRED SEVENTY FIVE<br>Dollars and<br>ZERO Cents per unit | | | $ 3,675.00 | $ 3,675.00 |
| **P11** | **BORROW AND SPOIL (ROADWAY)** | **1** | **LS** | | |
| | Complete in Place, for the Sum of<br>ONE HUNDRED TWENTY FOUR THOUSAND SEVEN HUNDRED FORTY<br>Dollars and<br>ZERO Cents per unit | | | $ 124,740.00 | $ 124,740.00 |
| **P12** | **MOISTURE TREATED SUBGRADE** | **7,180** | **SY** | | |
| | Complete in Place, for the Sum of<br>THREE<br>Dollars and<br>ZERO Cents per unit | | | $ 3.00 | $ 21,540.00 |

| Item No. | Name of Pay Item with Unit Price in Words | Est. Quantity | Unit | Unit Bid Price | Amount Bid |
|---|---|---|---|---|---|
| P13 | 6" LIME STABILIZED SUBGRADE | 1,145 | SY | | |
| | Complete in Place, for the Sum of<br>NINE<br>Dollars and<br>ZERO Cents per unit | | | $ 9.00 | $ 10,305.00 |
| P14 | HYDRATED LIME | 25 | TON | | |
| | Complete in Place, for the Sum of<br>TWO HUNDRED THREE<br>Dollars and<br>ZERO Cents per unit | | | $ 203.00 | $ 5,075.00 |
| P15 | 4" TYP B HMAC (TXDOT) | 30 | TON | | |
| | Complete in Place, for the Sum of<br>TWO HUNDRED<br>Dollars and<br>ZERO Cents per unit | | | $ 200.00 | $ 6,000.00 |
| P16 | 8" REINFORCED CONCRETE PAVEMENT (STREET) | 6,299 | SY | | |
| | Complete in Place, for the Sum of<br>SIXTY TWO<br>Dollars and<br>TWENTY FIVE Cents per unit | | | $ 62.25 | $ 392,112.75 |
| P17 | 10" PORTLAND CEMENT CONC PAVEMENT W/ 6" MONO CURB ) | 1,050 | SY | | |
| | Complete in Place, for the Sum of<br>EIGHTY TWO<br>Dollars and<br>FIVE Cents per unit | | | $ 82.05 | $ 86,152.50 |
| P18 | REINFORCED CONCRETE STREET HEADERS | 540 | LF | | |
| | Complete in Place, for the Sum of<br>THIRTY<br>Dollars and<br>ZERO Cents per unit | | | $ 30.00 | $ 16,200.00 |
| P19 | 5" CONCRETE SIDEWALK | 3,100 | SY | | |
| | Complete in Place, for the Sum of<br>FIFTY ONE<br>Dollars and<br>NINETY EIGHT Cents per unit | | | $ 51.98 | $ 161,138.00 |
| P20 | ACESSIBLE RAMP | 12 | EA | | |
| | Complete in Place, for the Sum of<br>TWO THOUSAND ONE HUNDRED EIGHTY FOUR<br>Dollars and<br>ZERO Cents per unit | | | $ 2,184.00 | $ 26,208.00 |
| P21 | RAIL (HANDRAIL) (TY F) | 35 | LF | | |
| | Complete in Place, for the Sum of<br>TWO HUNDRED TEN<br>Dollars and<br>ZERO Cents per unit | | | $ 210.00 | $ 7,350.00 |
| P22 | INSTALL NEW SIGN AND SIGN POST ASSEMBLY | 20 | EA | | |
| | Complete in Place, for the Sum of<br>SEVEN HUNDRED EIGHT TWO<br>Dollars and<br>TWENTY FIVE Cents per unit | | | $ 782.25 | $ 15,645.00 |
| P23 | REFL PAV MRKG TY I & TY II (W) 4" SOLID | 3,300 | LF | | |
| | Complete in Place, for the Sum of<br>ONE<br>Dollars and<br>TWENTY ONE Cents per unit | | | $ 1.21 | $ 3,993.00 |
| P24 | REFL PAV MRKG TY I & TY II (Y) 4" SOLID | 3,050 | LF | | |
| | Complete in Place, for the Sum of<br>ONE<br>Dollars and<br>TWENTY ONE Cents per unit | | | $ 1.21 | $ 3,690.50 |

| Item No. | Name of Pay Item with Unit Price in Words | Est. Quantity | Unit | Unit Bid Price | Amount Bid |
|---|---|---|---|---|---|
| P25 | REFL PAV MRKG TY I & TY II (Y) 4" BROKEN | 140 | LF | | |
| | Complete in Place, for the Sum of<br>FOUR<br>Dollars and<br>TWENTY Cents per unit | | | $ 4.20 | $ 588.00 |
| P26 | REFL PAV MRKG TY I & TY II (W) ARROW | 3 | EA | | |
| | Complete in Place, for the Sum of<br>ONE HUNDRED FIFTY TWO<br>Dollars and<br>TWENTY FIVE Cents per unit | | | $ 152.25 | $ 456.75 |
| P27 | REFL PAV MRKG TY I & TY II (W) 24" STOP BAR MARKING | 31 | LF | | |
| | Complete in Place, for the Sum of<br>EIGHT<br>Dollars and<br>FIFTY SIX Cents per unit | | | $ 8.56 | $ 265.36 |
| P28 | REFL PAV MRKG TY I & TY II (W) 5' X 8' CROSSWALK WITH 5' SPACE | 3 | EA | | |
| | Complete in Place, for the Sum of<br>TWO HUNDRED NINETY NINE<br>Dollars and<br>TWENTY FIVE Cents per unit | | | $ 299.25 | $ 897.75 |
| P29 | REFL PAV MRKG TY I & TY II (W) 24"X 8" CROSSWALK WITH 4' SPACE | 15 | EA | | |
| | Complete in Place, for the Sum of<br>NINETY NINE<br>Dollars and<br>SEVENTY FIVE Cents per unit | | | $ 99.75 | $ 1,496.25 |
| P30 | REFL PAV MRKG TY I (W) 24" TRIANGLE | 21 | EA | | |
| | Complete in Place, for the Sum of<br>FIFTY<br>Dollars and<br>FORTY Cents per unit | | | $ 50.40 | $ 1,058.40 |
| P31 | REMOVE AND RELOCATE EX GATE | 1 | EA | | |
| | Complete in Place, for the Sum of<br>TWO THOUSAND SEVEN HUNDRED THIRTY<br>Dollars and<br>ZERO Cents per unit | | | $ 2,730.00 | $ 2,730.00 |
| P32 | ONCOR DUCT CROSSING COORDINATION | 1 | LS | | |
| | Complete in Place, for the Sum of<br>THREE THOUSAND<br>Dollars and<br>ZERO Cents per unit | | | $ 3,000.00 | $ 3,000.00 |

**TOTAL AMOUNT BID-BASE BID - STREET IMPROVEMENTS**

$1,406,380.86
(Total Amount Bid, Numerical Value)

ONE MILLION FOUR HUNDRED SIX THOUSAND, THREE HUNDRED EIGHTY Dollars
and EIGHTY SIX Cents

***The Owner reserves the right to delete any bid items or portions thereof. If the Owner elects to delete any portions of the PROJECT from the contract, then the contract can be awarded on that basis.**

| Item No. | Name of Pay Item with Unit Price in Words | Est. Quantity | Unit | Unit Bid Price | Amount Bid |
|---|---|---|---|---|---|
| BRIDGE OVER FARMERS BRANCH CREEK | | | | | |
| B1 | FLOWABLE BACKFILL | 443 | CY | | |
| | Complete in Place, for the Sum of<br>ONE HUNDRED SIXTY EIGHT<br>Dollars and<br>ZERO Cents per unit | | | $ 168.00 | $ 74,424.00 |
| B2 | DRILL SHAFT (18 IN) | 148 | LF | | |
| | Complete in Place, for the Sum of<br>ONE HUNDRED TWENTY SIX<br>Dollars and<br>ZERO Cents per unit | | | $ 126.00 | $ 18,648.00 |
| B3 | DRILL SHAFT (36 IN) | 296 | LF | | |
| | Complete in Place, for the Sum of<br>TWO HUNDRED TEN<br>Dollars and<br>ZERO Cents per unit | | | $ 210.00 | $ 62,160.00 |
| B4 | CL C CONC (ABUT) (HPC) | 100 | CY | | |
| | Complete in Place, for the Sum of<br>ONE THOUSAND FIFTY<br>Dollars and<br>ZERO Cents per unit | | | $ 1,050.00 | $ 105,000.00 |
| B5 | REINF CONC SLAB (HPC) | 2,648 | SF | | |
| | Complete in Place, for the Sum of<br>TWENTY NINE<br>Dollars and<br>FORTY Cents per unit | | | $ 29.40 | $ 77,851.20 |
| B6 | BRIDGE SIDEWALK (HPC) | 980 | SF | | |
| | Complete in Place, for the Sum of<br>SIXTEEN<br>Dollars and<br>EIGHTY Cents per unit | | | $ 16.80 | $ 16,464.00 |
| B7 | APPROACH SLAB (HPC) | 83 | CY | | |
| | Complete in Place, for the Sum of<br>SEVEN HUNDRED THIRTY FIVE<br>Dollars and<br>ZERO Cents per unit | | | $ 735.00 | $ 61,005.00 |
| B8 | PRESTR CONC I-GIRDER (TX40) | 329 | LF | | |
| | Complete in Place, for the Sum of<br>TWO HUNDRED SEVENTY THREE<br>Dollars and<br>ZERO Cents per unit | | | $ 273.00 | $ 89,817.00 |
| B9 | RIPRAP (CONC) (CL B) (RR8&RR9) | 76 | CY | | |
| | Complete in Place, for the Sum of<br>SIX HUNDRED THIRTY<br>Dollars and<br>ZERO Cents per unit | | | $ 630.00 | $ 47,880.00 |
| B10 | RIPRAP (STONE PROTECTION) (24 IN) | 1,470 | CY | | |
| | Complete in Place, for the Sum of<br>ONE HUNDRED TWENTY FIVE<br>Dollars and<br>ZERO Cents per unit | | | $ 125.00 | $ 183,750.00 |
| B11 | ELASTOMERIC BEARING (LAMINATED) | 8 | EA | | |
| | Complete in Place, for the Sum of<br>FOUR HUNDRED SEVENTY TWO<br>Dollars and<br>FIFTY Cents per unit | | | $ 472.50 | $ 3,780.00 |
| B12 | STR STEEL (MISCELLANEOUS BRIDGE) (BS-EJCP) | 186 | LB | | |
| | Complete in Place, for the Sum of<br>EIGHTEEN<br>Dollars and<br>NINETY Cents per unit | | | $ 18.90 | $ 3,515.40 |

| Item No. | Name of Pay Item with Unit Price in Words | Est. Quantity | Unit | Unit Bid Price | Amount Bid |
|---|---|---|---|---|---|
| B13 | RAIL (TY C221) (HPC) | 238 | LF | | |
| | Complete in Place, for the Sum of<br>ONE HUNDRED NINETY NINE<br>Dollars and<br>FIFTY Cents per unit | | | $ 199.50 | $ 47,481.00 |
| B14 | SEALED EXPANSION JOINT (4 IN) (SEJ - M) | 51 | LF | | |
| | Complete in Place, for the Sum of<br>ONE HUNDRED SEVENTY EIGHT<br>Dollars and<br>FIFTY Cents per unit | | | $ 178.50 | $ 9,103.50 |
| B15 | MTL BEAM GD FEN TRANS (THRIE-BEAM) | 3 | EA | | |
| | Complete in Place, for the Sum of<br>TWO THOUSAND THREE HUNDRED TEN<br>Dollars and<br>ZERO Cents per unit | | | $ 2,310.00 | $ 6,930.00 |
| B16 | TERMINAL ANCHOR SECTION | 3 | EA | | |
| | Complete in Place, for the Sum of<br>THREE THOUSAND FOUR HUNDRED SIXTY FIVE<br>Dollars and<br>ZERO Cents per unit | | | $ 3,465.00 | $ 10,395.00 |

**TOTAL AMOUNT BID-BRIDGE OVER FARMERS BRANCH CREEK**

$818,204.10
(Total Amount Bid, Numerical Value)

EIGHT HUNDRED EIGHTEEN THOUSAND TWO HUNDRED FOUR Dollars
and TEN Cents

***The Owner reserves the right to delete any bid items or portions thereof. If the Owner elects to delete any portions of the PROJECT from the contract, then the contract can be awarded on that basis.**

| Item No. | Name of Pay Item with Unit Price in Words | Est. Quantity | Unit | Unit Bid Price | Amount Bid |
|---|---|---|---|---|---|
| **BASE BID - STORM SYSTEM IMPROVEMENTS** | | | | | |
| **D1** | **18" RCP CLASS III** | **490** | **LF** | | |
| | Complete in Place, for the Sum of<br>SEVENTY SEVEN<br>SEVENTY Dollars and Cents per unit | | | $ 77.70 | $ 38,073.00 |
| **D2** | **24" RCP CLASS III** | **285** | **LF** | | |
| | Complete in Place, for the Sum of<br>NINETY EIGHT<br>SEVENTY Dollars and Cents per unit | | | $ 98.70 | $ 28,129.50 |
| **D3** | **54" RCP CLASS III** | **95** | **LF** | | |
| | Complete in Place, for the Sum of<br>THREE HUNDRED TWENTY SIX<br>FIFTY FIVE Dollars and Cents per unit | | | $ 326.55 | $ 31,022.25 |
| **D4** | **6' CURB INLET** | **4** | **EA** | | |
| | Complete in Place, for the Sum of<br>FIVE THOUSND ONE HUNDRED FORTY FIVE<br>ZERO Dollars and Cents per unit | | | $ 5,145.00 | $ 20,580.00 |
| **D5** | **CONCRETE HEADWALL (CHFW-0)** | **3** | **EA** | | |
| | Complete in Place, for the Sum of<br>SIX THOUSAND NINE HUNDRED THIRTY<br>ZERO Dollars and Cents per unit | | | $ 6,930.00 | $ 20,790.00 |
| **D6** | **18" RCP 2:1 SET TY II HEADWALL** | **1** | **EA** | | |
| | Complete in Place, for the Sum of<br>TWO THOUSAND FIVE HUNDRED TWENTY<br>ZERO Dollars and Cents per unit | | | $ 2,520.00 | $ 2,520.00 |
| **D7** | **18" RCP 6:1 SET TY II HEADWALL** | **4** | **EA** | | |
| | Complete in Place, for the Sum of<br>THREE THOUSAND FORTY FIVE<br>ZERO Dollars and Cents per unit | | | $ 3,045.00 | $ 12,180.00 |
| **D8** | **24" RCP 6:1 SET TY II HEADWALL** | **4** | **EA** | | |
| | Complete in Place, for the Sum of<br>FOUR THOUSAND TWO HUNDRED<br>ZERO Dollars and Cents per unit | | | $ 4,200.00 | $ 16,800.00 |
| **D9** | **RIPRAP (STONE PROTECTION) (12 IN) (CHFW-0 HEADWALL)** | **12** | **CY** | | |
| | Complete in Place, for the Sum of<br>ONE HUNDRED THIRTY ONE<br>TWENTY FIVE Dollars and Cents per unit | | | $ 131.25 | $ 1,575.00 |
| **D10** | **TRENCH EXCAVATION PROTECTION (STORM SYSTEM)** | **870** | **LF** | | |
| | Complete in Place, for the Sum of<br>ONE<br>FIVE Dollars and Cents per unit | | | $ 1.05 | $ 913.50 |

**TOTAL AMOUNT BID-BASE BID - STORM SYSTEM IMPROVEMENTS**

$ 172,583.25
(Total Amount Bid, Numerical Value)

ONE HUNDRED SEVENTY TWO THOUSAND FIVE HUNDRED EIGHTY THREE Dollars
and TWENTY FIVE Cents

***The Owner reserves the right to delete any bid items or portions thereof. If the Owner elects to delete any portions of the PROJECT from the contract, then the contract can be awarded on that basis.**

| Item No. | Name of Pay Item with Unit Price in Words | Est. Quantity | Unit | Unit Bid Price | Amount Bid |
|---|---|---|---|---|---|
| **BASE BID - DETENTION POND IMPROVEMENTS** | | | | | |
| H1 | UNCLASSIFIED POND AND CREEK EXCAVATION | 1 | LS | | |
| | Complete in Place, for the Sum of<br>SIXTY THOUSAND THREE HUNDRED SEVENTY FIVE<br>Dollars and<br>ZERO Cents per unit | | | $ 60,375.00 | $ 60,375.00 |
| H2 | BORROW AND SPOIL (DETENTION POND AND CREEK) | 1 | LS | | |
| | Complete in Place, for the Sum of<br>SIX THOUSAND THREE HUNDRED<br>Dollars and<br>ZERO Cents per unit | | | $ 6,300.00 | $ 6,300.00 |
| H3 | BORROW AND SPOIL (DETENTION POND AND CREEK) (SELECT FILL) | 1 | LS | | |
| | Complete in Place, for the Sum of<br>TWENTY EIGHT THOUSAND TWO HUNDRED TWENTY FOUR<br>Dollars and<br>ZERO Cents per unit | | | $ 28,224.00 | $ 28,224.00 |
| H4 | RIPRAP (CONC) (CL B) (RR8&RR9) (DETENTION POND) | 6 | CY | | |
| | Complete in Place, for the Sum of<br>SEVEN HUNDRED SIXTEEN<br>Dollars and<br>TEN Cents per unit | | | $ 716.10 | $ 4,296.60 |
| H5 | RIPRAP (STONE PROTECTION) (24 IN) (DETENTION POND) | 910 | CY | | |
| | Complete in Place, for the Sum of<br>ONE HUNDRED TEN<br>Dollars and<br>TWENTY FIVE Cents per unit | | | $ 110.25 | $ 100,327.50 |
| H6 | CONCRETE OUTFALL STUCTURE | 7 | CY | | |
| | Complete in Place, for the Sum of<br>TWO THOUSAND FOUR HUNDRED FIFTEEN<br>Dollars and<br>ZERO Cents per unit | | | $ 2,415.00 | $ 16,905.00 |

**TOTAL AMOUNT BID-BASE BID - DETENTION POND IMPROVEMENTS**

$ 216,428.10
(Total Amount Bid, Numerical Value)

TWO HUNDRED SIXTEEN THOUSAND FOUR HUNDRED TWENTY EIGHT Dollars
and TEN Cents

***The Owner reserves the right to delete any bid items or portions thereof. If the Owner elects to delete any portions of the PROJECT from the contract, then the contract can be awarded on that basis.**

| Item No. | Name of Pay Item with Unit Price in Words | Est. Quantity | Unit | Unit Bid Price | Amount Bid |
|---|---|---|---|---|---|
| BASE BID - LANDSCAPE IMPROVEMENTS AND EROSION CONTROL | | | | | |
| L1 | HYDRAULIC MULCHING WITH 4" TOPSOIL | 45,490 | SY | | |
| | Complete in Place, for the Sum of TWO Dollars and EIGHTY NINE Cents per unit | | | $ 2.89 | $ 131,466.10 |
| L2 | SEDIMENT CONTROL FENCE (INSTALL/MAINTAIN/REMOVE) | 7,475 | LF | | |
| | Complete in Place, for the Sum of ONE Dollars and SIXTY EIGHT Cents per unit | | | $ 1.68 | $ 12,558.00 |
| L3 | STABILIZED CONSTRUCTION EXIT/ENTRANCE | 180 | SY | | |
| | Complete in Place, for the Sum of THIRTY ONE Dollars and FIFTY Cents per unit | | | $ 31.50 | $ 5,670.00 |
| L4 | INLET PROTECTION (INSTALL/MAINTAIN/REMOVE) | 4 | EA | | |
| | Complete in Place, for the Sum of ONE HUNDRED FORTY ONE Dollars and SEVENTY FIVE Cents per unit | | | $ 141.75 | $ 567.00 |
| L5 | ROCK CHECK DAM | 65 | LF | | |
| | Complete in Place, for the Sum of FORTY TWO Dollars and ZERO Cents per unit | | | $ 42.00 | $ 2,730.00 |
| L6 | STORM WATER POLLUTION PREVENTION PLAN | 1 | LS | | |
| | Complete in Place, for the Sum of EIGHT THOUSND FIVE HUNDRED Dollars and ZERO Cents per unit | | | $ 8,500.00 | $ 8,500.00 |

**TOTAL AMOUNT BID-TOTAL AMOUNT BID-BASE BID - DETENTION POND IMPROVEMENTS**

$ 161,491.10

(Total Amount Bid, Numerical Value)

ONE HUNDRED SIXTY ONE THOUSAND FOUR HUNDRED NINETY ONE Dollars

and TEN Cents

***The Owner reserves the right to delete any bid items or portions thereof. If the Owner elects to delete any portions of the PROJECT from the contract, then the contract can be awarded on that basis.**

| Item No. | Name of Pay Item with Unit Price in Words | Est. Quantity | Unit | Unit Bid Price | Amount Bid |
|---|---|---|---|---|---|
| **BASE BID - WATER IMPROVEMENTS** | | | | | |
| **W1** | **8" PVC WATER LINE** | **355** | **LF** | | |
| | Complete in Place, for the Sum of<br>EIGHTY ONE<br>Dollars and<br>NINETY Cents per unit | | | $ 81.90 | $ 29,074.50 |
| **W2** | **12" PVC WATER LINE** | **575** | **LF** | | |
| | Complete in Place, for the Sum of<br>NINETY EIGHT<br>Dollars and<br>SEVENTY Cents per unit | | | $ 98.70 | $ 56,752.50 |
| **W3** | **8" GATE VALVE** | **2** | **EA** | | |
| | Complete in Place, for the Sum of<br>ONE THOUSAND EIGHT HUNDRED NINETY<br>Dollars and<br>ZERO Cents per unit | | | $ 1,890.00 | $ 3,780.00 |
| **W4** | **12" GATE VALVE** | **2** | **EA** | | |
| | Complete in Place, for the Sum of<br>THREE THOUSAND TWO HUNDRED FIFTY FIVE<br>Dollars and<br>ZERO Cents per unit | | | $ 3,255.00 | $ 6,510.00 |
| **W5** | **FIRE HYDRANT ASSEMBLY** | **1** | **EA** | | |
| | Complete in Place, for the Sum of<br>FOUR THOUSAND NINE HUNDRED THIRTY FIVE<br>Dollars and<br>ZERO Cents per unit | | | $ 4,935.00 | $ 4,935.00 |
| **W6** | **REMOVE EXISTING 12" AC WATER LINE** | **8** | **LF** | | |
| | Complete in Place, for the Sum of<br>FORTY TWO<br>Dollars and<br>ZERO Cents per unit | | | $ 42.00 | $ 336.00 |
| **W7** | **ABANDON EXISTING ASBESTOS PIPE IN PLACE** | **500** | **LF** | | |
| | Complete in Place, for the Sum of<br>TWENTY ONE<br>Dollars and<br>ZERO Cents per unit | | | $ 21.00 | $ 10,500.00 |
| **W8** | **WATER TESTING** | **1** | **LS** | | |
| | Complete in Place, for the Sum of<br>ONE THOUSAND THREE HUNDRED TWELEVE<br>Dollars and<br>FIFTY Cents per unit | | | $ 1,312.50 | $ 1,312.50 |
| **W9** | **TRENCH EXCAVATION PROTECTION (WATER SYSTEM)** | **930** | **LF** | | |
| | Complete in Place, for the Sum of<br>ONE<br>Dollars and<br>FIVE Cents per unit | | | $ 1.05 | $ 976.50 |

**TOTAL AMOUNT BID-BASE BID - WATER IMPROVEMENTS** $ 114,177.00

(Total Amount Bid, Numerical Value)

ONE HUNDRED FOURTEEN THOUSAND ONE HUNDRED SEVENTY SEVEN Dollars

and ZERO Cents

***The Owner reserves the right to delete any bid items or portions thereof. If the Owner elects to delete any portions of the PROJECT from the contract, then the contract can be awarded on that basis.**

| Item No. | Name of Pay Item with Unit Price in Words | Est. Quantity | Unit | Unit Bid Price | Amount Bid |
|---|---|---|---|---|---|
| BASE BID - SANITARY SEWER IMPROVEMENTS | | | | | |
| SS1 | 8" PVC SSWR LINE | 315 | LF | | |
| | Complete in Place, for the Sum of<br>FIFTY FOUR Dollars and<br>SIXTY Cents per unit | | | $ 54.60 | $ 17,199.00 |
| SS2 | 4' STANDARD MANHOLE | 1 | EA | | |
| | Complete in Place, for the Sum of<br>SIX THOUSAND FIVE HUNDRED TEN Dollars and<br>ZERO Cents per unit | | | $ 6,510.00 | $ 6,510.00 |
| SS3 | CEMENT STABILIZED SAND ENCASEMENT (MIN. 10% CEMENT/CY) | 20 | LF | | |
| | Complete in Place, for the Sum of<br>FORTY SEVEN Dollars and<br>TWENTY FIVE Cents per unit | | | $ 47.25 | $ 945.00 |
| SS4 | SANITARY SEWER CCTV INSPECTION | 1 | LS | | |
| | Complete in Place, for the Sum of<br>SIX HUNDRED SIXTY ONE Dollars and<br>FIFTY Cents per unit | | | $ 661.50 | $ 661.50 |
| SS5 | TRENCH EXCAVATION PROTECTION (SANITARY SEWER IMPROVEMENTS) | 315 | LF | | |
| | Complete in Place, for the Sum of<br>ONE Dollars and<br>FIVE Cents per unit | | | $ 1.05 | $ 330.75 |

**TOTAL AMOUNT BID-BASE BID - SANITARY SEWER IMPROVEMENTS**

$ 25,646.25
(Total Amount Bid, Numerical Value)

TWENTY FIVE THOUSAND SIX HUNDRED FORTY SIX Dollars
and TWENTY FIVE Cents

***The Owner reserves the right to delete any bid items or portions thereof. If the Owner elects to delete any portions of the PROJECT from the contract, then the contract can be awarded on that basis.**

| Item No. | Name of Pay Item with Unit Price in Words | Est. Quantity | Unit | Unit Bid Price | Amount Bid |
|---|---|---|---|---|---|
| **BASE BID - OWNER'S CONTINGENCY** | | | | | |
| 01 | OWNER'S CONTINGENCY | 1 | LS | | |
| | Complete in Place, for the Sum of<br>Eighty Five Thousand Dollars and<br>Zero Cents per unit | | | $ 85,000.00 | $ 85,000.00 |

**TOTAL AMOUNT BID-BASE BID - OWNER'S CONTINGENCY**

$ 85,000.00
(Total Amount Bid, Numerical Value)

EIGHTY FIVE THOUSAND Dollars
and ZERO Cents

***The Owner reserves the right to delete any bid items or portions thereof. If the Owner elects to delete any portions of the PROJECT from the contract, then the contract can be awarded on that basis.**

**TOTAL AMOUNT OF BASE BID (ITEMS P1 THROUGH O1)**

$ 2,999,910.66

(Total Amount Bid, Numerical Value)

Two Million, Nine hundred Ninety Nine thousand, nine hundred ten Dollars

and Sixty Six Cents

(Total Amount Bid in Words)

***The Owner reserves the right to delete any bid items or portions thereof. If the Owner elects to delete any portions of the PROJECT from the contract, then the contract can be awarded on that basis.**

NOTES:

1. All items, labor, materials, equipment, facilities, incidentals and work required for construction of the project are to be provided and installed by the Contractor as part of the project and payment for the cost of such shall be included in the price bid for the construction of the project.

2. Prices must be shown in words and figures for each item listed in the Proposal. In the event of discrepancy, the words shall control.

3. Materials, which are "tax exempt", are those items which are physically incorporated into the facilities constructed for the Town of Addison, as set forth in the Special Provisions. Materials include, but are not limited to purchased items such as water pipe, sanitary sewer pipe, storm drain pipe, etc.

   Services, which are "not tax exempt", are those items which are used by the Contractor but are not physically incorporated into the Town of Addison's facility and/or items which are consumed by construction, as set forth in the Special Provisions. Services include, but are not limited to, items such as supplies, tools, skill and labor, the purchase, rental or lease of equipment, etc.

Louis Tiseo, President

Name of Person Signing Bid

Signature of Person Signing Bid

419 US HWY 80 E Mesquite TX 75150

Address

(972)289-0723 (972)216-5637

Telephone No. Fax No.

38-220-9998

T.I.N. (Tax Identification or Employer's Number)

If BIDDER is:

**AN INDIVIDUAL**

By _____ (Seal)
(Individual's Name)

doing business as _____

Business address: _____

_____

_____

Phone No. _____

---

**A PARTNERSHIP**

By _____ (Seal)
(Firm Name)

_____
(General Partner)

doing business as _____

Business address: _____

_____

_____

Phone No. _____

**A CORPORATION**

By Tiseo Paving Co.
(Corporation Name)

Michigan
(State of Incorporation)

By Louis Tiseo
(Name of Person Authorized to Sign)

President
(Title)

(Corporate Seal)

Attest _____
(Secretary)

Business address: 419 US HWY 80 E

Mesquite TX 75150

Phone No. (972) 289-0723

---

**A JOINT VENTURE**

By _____
(Name)

_____
(Address)

By _____
(Name)

_____
(Address)

(Each joint venture must sign. The manner of signing for each individual, partnership and corporation that is a party to the joint venture should be in the manner indicated above.)

**SECTION BB**

# BID BOND

## BID BOND

Bidder shall submit a bid bond equal to five percent (5%) of the bid price. Failure to submit a bid bond when required may deem the bid non-responsive. Bid Bonds may be submitted electronically with the executed original provided immediately upon request.

**SECTION BQS**

# BIDDER QUALIFICATION STATEMENT

## SECTION BQS

**ALL BIDDERS ARE NOTIFIED THAT THE FOLLOWING QUALIFICATION STATEMENT MUST BE COMPLETED AND SUBMITTED WITH THE BID PROPOSAL**

## CONTRACTOR'S QUALIFICATIONS

The Contractor shall show that he has experience with similar projects that require working on concrete pavement, water, storm sewer, detention pond, and bridge construction in close proximity to many physical features (such as: fences, carports, utility poles, guy lines, gas lines and meters, water lines, sewer manholes and cleanouts, etc.) which will require the Contractor to plan his work efforts and equipment needs with these limitations in mind. The Contractor shall submit a complete list of ALL Municipal and Similar Non-Municipal current and completed projects for the past three (3) years for review. This list shall include the names of supervisors and type of equipment used to perform this work.

**BIDDERS QUALIFICATION STATEMENT**

**INFRASTRUCTURE AND DEVELOPMENT SERVICES BID NUMBER 21-69, BELLA LANE SOUTH EXTENSION & ALPHA ROAD CONNECTOR**

Contractor: Tiseo Paving Co.

Indicate One: _____ Sole Proprietor _____ Partnership _____ Other

✓ Corporation _____ Joint Venture

Name: Louis Tiseo Partner: _____

Title: President Title: _____

Address: 419 US HWY 80 Address: _____

City: Mesquite City: _____

State & Zip: TX 75150 State & Zip: _____

Phone: (972) 289-0723 Phone: _____

State and Date of Incorporation, Partnership, Ownership, Etc. Michigan, 1974

Location of Principal Office: 419 US HWY 80 E Mesquite TX 75150

Contact and Phone at Principal Office: Louis Tiseo (972) 289-0723

Liability Insurance Provider and Limits of Coverage: Amerisure $10,000,000

Workers Compensation Insurance Provider: Amerisure

Surety (Performance and Payment): Hartford Fire Insurance

Address: One Hartford CTR, Hartford, CT 06115

Contact and Phone: Meagan Kress (248) 828-3377

Superintendent and Backup Superintendent: (Work Resume - attach additional sheets.) (Safety Record – attached additional sheets; if needed show all verified safety violations.) The superintendent shall be able to communicate in English and not operate any equipment and have not had any verified job safety violations in the past five years. Any variations shall be reviewed by the OWNER for approval or denial. A job site shall be shut down if proper supervision is not provided.

Superintendent Name: Glenn Samples

Backup Superintendent Name: Justin Barsotta

Safety Record – List ALL Verified Violations for Superintendent and Backup Superintendent with explanation, date and action taken to correct future safety violations:

Superintendent

*See attached

Backup Superintendent

*See attached

Total Number of Employees to be Associated with this Job: 109

Managerial 14 Administrative 11 Professional 5

Skilled 37 Semi-Skilled 9 Other 33

Percentage of work to be done by Bidder's Employees (Based on Dollars Bid): 51%

**Glenn Samples**
**6807 Abiline**
**Sachse, TX 75048**
**(FULL TIME TO PROJECT)**

**EXPERIENCE:**

(December 28th, 2015 Through Present) Tiseo Paving Co. Mesquite, Texas. Project Superintendent. Responsible for scheduling and coordinating projects, including projects in excess of 4,000,000.

(April 5, 2007 Through December 7th, 2015) Garland Concrete, Garland, Texas. Equipment Operator.

(1978 Through March 2007) Samples Concrete Construction Inc. Owner Operator Concrete Contracting.

**MISCELLANEOUS:**

- **Certified in CPR**
- **OSHA Confined Space Requirement**

**MOST RECENT PROJECTS AND REFERENCES:**

Stacey Road Improvements for the Town of Fairview ($4,889,573.25)
- James Chancellor, Project Engineer (972)886-4235

Ridgedale and Glenbrook Drive for the City of Garland ($5,972,671.00)
- Mike Rozelle, Project Engineer (972)205-2174

# Justin Barsotta

350 N State Hwy 360 Apt 12311 Mansfield TX, 76063| (469) 446-0321 | JBARSOTTA@TISEOPAVING.COM

## Experience

(August 2008 through present) Tiseo Paving Co. Mesquite, Texas. Project Superintendent. Responsible for scheduling and coordinating projects,

- Burbank
- Central & Pearl
- Lake June
- Grady Niblo
- Sylvan Avenue
- S Lakeshore Drive
- Hickory Tree Rd

## Miscellaneous:

- **Certified in CPR**
- **OSHA Confined Space Requirement**

## References:

**MATHEW STEVENS P.E.: CITY OF DALLAS, (214) 948-4163**

**HORACE PIZZARELLO: CITY OF DALLAS, (214) 948-5350**

Type(s) of work to be done by Bidder's Employees (examples: concrete paving, structural concrete, waterlines, sanitary sewer lines, storm pipe, storm inlets, excavation, lime, bridge fencing, etc.)

Subgrade Preperation, Pavement

Access to Tools and Equipment: Percent Owned 100% Percent Rented ____

Number of Years in Business as a Contractor on Above Types of Works: 48

Type(s) of Work to be done by Sub-Contractors
Include Name, Address, and Phone Number of Sub-Contractor.
Use additional sheets if needed.

| Type of Work | Sub-Contractor |
|---|---|
| DiFt | Vihaver |
| Utility | Four Star |
| Bridge | Ashlar |

List Equipment to be used on this project (Make/Model/Age of Major Equipment) Any Equipment not listed shall be reviewed by the OWNER for approval or rejection prior to use of Equipment on this project. (Use additional sheets if necessary)

| Type of Equipment | Make | Model | Age (years) |
|---|---|---|---|
| * See Attached | | | |

**TISEO PAVING COMPANY** ATTACHMENT C

SCHEDULE OF EQUIPMENT

| Co # | Model Yr | Manufacturer | Model | Description |
|---|---|---|---|---|
| **ARROW & MESSAGE BOARDS** | | | | **Last Inventory Date 12/10/201** |
| **BACKHOES** | | | | |
| 639 | 2004 | Caterpillar | 416D | Backhoe/Loader |
| 649 | 2005 | Caterpillar | 416D | Backhoe |
| 650 | 2005 | Caterpillar | 416D | Backhoe Loader |
| 663 | 2008 | Caterpillar | 416E | Bakchoe Loader |
| 667 | 2008 | Caterpillar | 416E | Backhoe Loader |
| 670 | 2005 | Caterpillar | 420D | Backhoe Loader |
| 680 | 2011 | Caterpillar | 416E | Backhoe Loader |
| 687 | 2012 | Caterpillar | 416F | Backhoe Loader |
| 701 | 2016 | Caterpillar | 416F | Backhoe Loader |
| 702 | 2016 | Caterpillar | 416F | Backhoe Loader |
| 728 | 2019 | Caterpillar | 416F | Backhoe Loader |

**TISEO PAVING COMPANY** ATTACHMENT C

SCHEDULE OF EQUIPMENT

| Co # | Model Yr | Manufacturer | Model | Description |
|---|---|---|---|---|

## BATCH PLANT OPERATIONS

| | | | |
|---|---|---|---|
| Plant "A" | 1987 | Haganator | HT-10300C-65 |
| | 1987 | Caterpillar | SR-4 275-KW Generator w/Trailer |
| | | Caterpillar | 3406 Diesel Engine |
| | | | |
| Plant "B" | 1992 | Vince Hagan | HT-10500C-80 |
| | 1992 | PSI | VH Eagle "MP" Computer |
| | 1992 | Caterpillar | 275KW Generator Set w/Trailer |
| | | Caterpillar | 3406 Diesel Engine (Skid Mounted) |
| | 2007 | Vince Hagan | Portable Cement Mixer 10 cy |
| | | | |
| Plant "C" | 2001 | Vince Hagan | HTS CM-12400-D-65 |
| | | Ditta | Generator Set |
| | | Vince Hagan | Generator Trailer |
| | | AmeriTech | Computer/Office Trailer |
| | | | |
| Plant "D" | 2017 | Vince Hagan | HT-CM-12400C-65-3 |
| | | Cummins | Generator Set |
| | | Cummins | Trailer |
| 722 | 2018 | Entech | Chiller |
| | | | |
| Plant "E" | 2020 | Vince Hagan | HT-12400-C-65 |
| | | Silo | HCA-400 |
| | | Conveyor | |
| | | Generator | |
| | | Generator Trailer | 2009 Great Dane |
| | | Command Batch Computer | |

**TISEO PAVING COMPANY** ATTACHMENT C

SCHEDULE OF EQUIPMENT

| Co # | Model Yr | Manufacturer | Model | Description |
|---|---|---|---|---|
| **BOBCAT** | | | | |
| *515 | 1981 | Bobcat | M-631 | Skid Steer Loader |
| 730 | 2019 | Caterpillar | 289D | Skid Steer Loader |
| **BOX BLADES** | | | | |
| 635 | 2002 | Case | 570MXT | Loader/Box Blade |
| 660 | 2007 | Case | 570MXT | Loader/Box Blade |
| 684 | 2012 | Case | 570MXT | Loader/Box Blade |
| 696 | 2014 | Case | 570NXT | Loader/Box Blade |
| 709 | 2017 | Case | 570 4X4 | Loader/Box Blade |
| 726 | 2019 | Case | 570NEP | Loader/Box Blade |
| 737 | 2021 | Case | 50NEP | Loader/Box Blade |
| **BULLDOZERS** | | | | |
| 646 | 2004 | Caterpillar | D-5G Crawler Tracker | WGB01277 |
| 683 | 2012 | Caterpillar | D3K | |
| 725 | 2019 | Caterpillar | D5K | |
| **BROOMS** | | | | |
| 632 | 2002 | Lay-Mor | 4 Wheel Broom | |
| 647 | 2004 | Rosco | Broom (Hold No. from Bane) | |
| 677 | 2010 | Broce | CR350 Broom | |
| 694 | 2014 | Broce | KR350 Broom | 40893 |
| 708 | 2017 | Broce | CR350 Broom | A02029 |
| 729 | 2019 | Elgin | Crosswind Sweeper | |
| 734 | 2020 | Broce | RJT350 Broom | |
| 735 | 2020 | Broce | RJT350 Broom | |
| | | Ca | | |

**TISEO PAVING COMPANY** ATTACHMENT C

SCHEDULE OF EQUIPMENT

| Co # | Model Yr | Manufacturer | Model | Description |
|---|---|---|---|---|
| **COMPRESSORS** | | | | |
| CM1 | 1997 | Atlas | Copco 185CFM, Model XAS90JD | 2 Wheel |
| CM5 | 2006 | Airman | Aircompressor (Barnsco) | On Truck 201 |
| CM6 | 2007 | Ingersol Rand | Air Compressor | 2 Wheel (M046644) |
| CM7 | 2011 | Sullivan | Air Compressor | On Truck 187 |
| CM8 | 2011 | Sullivan | Air Compressor | 2 Wheels |
| CM9 | 2019 | Atlas | Copco XAS | On Truck 188 |
| CM10 | 2019 | Atlas | Copco XAS | On Truck 187 |
| **CONCRETE HAMMERS** | | | | |
| 682 | 2012 | Caterpillar | 289C = Detachable Concrete Breaker | Skid Steer Loader |
| **CONCRETE SAWS** | | | | |
| 688 | 2007 | Husquaverna | | Concrete Saw |
| 691 | 2014 | Husquaverna | | Concrete Saw |
| 739 | 2021 | Husquaverna | | Concrete Saw |
| **CRANE** | | | | |
| 573 | 1990 | Yale | RT-40 Crane | 25 Ton, 75' Boom |
| 700 | 2000 | Grove | RT875BXL Crane | |
| **EXCAVATORS** | | | | |
| 653 | 2005 | Caterpillar | 330CL | Hydraulic Excavator |
| 654 | 2005 | Caterpillar | 315CL | Hydraulic Excavator |
| 657 | 2005 | Caterpillar | 345CL | Hydraulic Excavator |

**TISEO PAVING COMPANY** ATTACHMENT C

SCHEDULE OF EQUIPMENT

| Co # | Model Yr | Manufacturer | Model | Description |
|---|---|---|---|---|
| **LIMING EQUIPMENT** | | | | |
| 578 | 1990 | Caterpillar | SS250 | Soil Stabilizer |
| 626 | 2001 | Caterpillar | 250C Lime Mixer | AWG00200 |
| 627 | 2001 | Caterpillar | 350B Lime Mixer | |
| 658 | 2006 | Caterpillar | RM500 Mixer | |
| 678 | 2010 | Terex | RS446 | Lime Mixer |
| 707 | 2017 | Caterpillar | RM500B Mixer | |
| 710 | 2017 | Wirtgen | Lime Mixer | Lime Mixer |
| 712 | 2017 | Wirtgen | Lime Mixer | Lime Mixer |
| **LOADERS** | | | | |
| *512 | 1981 | Caterpillar | 955L TRACK | Crawler Loader |
| 553 | 1987 | Caterpillar | 950B | Rubber Tired Loader |
| 576 | 1989 | Caterpillar | 936E | Rubber Tired Loader |
| 604 | 1995 | Caterpillar | 928F | Rubber Tired Loader |
| 605 | 1995 | Caterpillar | 928F | Rubber Tired Loader |
| 613 | 1997 | Caterpillar | 953C TRACK | Track Loader |
| 625 | 1999 | Caterpillar | 928G | Wheel Loader |
| 629 | 2001 | Caterpillar | 950G | Loader |
| 640 | 2004 | Caterpillar | 924G | Loader |
| 641 | 2004 | Caterpillar | 928G | Loader |
| 642 | 2004 | Caterpillar | 928G | Loader |
| 643 | 2004 | Caterpillar | 938G | Loader |
| 652 | 2005 | Caterpillar | 930G | Loader |
| 664 | 2008 | Caterpillar | 950H | Wheel Loader |
| 675 | 2010 | Caterpillar | 938H | Wheel Loader |
| 697 | 2014 | Caterpillar | 950K | Wheel Loader |
| 698 | 2015 | Caterpillar | 938K | Wheel Loader |
| 699 | 2015 | Caterpillar | 938K | Wheel Loader |
| 713 | 2017 | Caterpillar | 938M | Wheel Loader |
| 715 | 2017 | Caterpillar | 950GC | Wheel Loader |
| 717 | 2017 | Caterpillar | 938M | Wheel Loader |
| 727 | 2019 | Caterpillar | 938M | Wheel Loader |
| 731 | 2019 | Caterpillar | 950GC | Wheel Loader |

**TISEO PAVING COMPANY** ATTACHMENT C

SCHEDULE OF EQUIPMENT

| Co # | Model Yr | Manufacturer | Model | Description |
|---|---|---|---|---|
| **MANLIFT** | | | | |
| 665 | 2008 | Genie | Manlift | |
| 718 | 2017 | Genie | Manlift | |
| **MOTOR GRADERS** | | | | |
| 529 | 1985 | Caterpillar | 12G Grader | |
| 543 | 1986 | Caterpillar | 140G Grader | |
| 579 | 1989 | Caterpillar | 12G Grader | |
| 606 | 1995 | Caterpillar | 12 H Grader | |
| 630 | 2001 | Caterpillar | 140H | |
| 644 | 2004 | Caterpillar | 12H | Blade |
| 668 | 2008 | Caterpillar | 140M | |
| 714 | 2017 | Caterpillar | 140K | |
| 716 | 2017 | Caterpillar | 140K | |
| **PAVING MACHINES** | | | | |
| *616 | 1999 | Paver | GHP2800 | |
| *617 | 1999 | Gomaco | Spray Texture TC600 | |
| 628 | 2001 | Gomaco | GP2000 Slip Form Paver | |
| 656 | 2006 | Gomaco | New Generation Commander III | |
| 685 | 2012 | Gomaco | Texture Curing Machine TC600 | |
| 686 | 2012 | Gomaco | Paver GHP 2800 | |
| 705 | 2017 | Gomaco | GP2400 Paver | |
| 720 | 2017 | Gomaco | 2600 Paver | |

**TISEO PAVING COMPANY** ATTACHMENT C

SCHEDULE OF EQUIPMENT

| Co # | Model Yr | Manufacturer | Model | Description |
|---|---|---|---|---|
| **PLACERS** | | | | |
| 633 | 2002 | Gomaco | 9500 Concrete Placer | |
| 661 | 2008 | Gomaco | 9500 Concrete Placer | ***terp 0044 |
| 692 | 2014 | Gomaco | 9500 Concrete Placer | |
| 719 | 2017 | Gomaco | 9500 Concrete Placer | |
| | 2017 | Gomaco | Trimmer Head on 719 | |
| **ROLLERS** | | | | |
| 518 | 1982 | TAMPO | Sheepsfoot Roller | |
| 602 | 1993 | Caterpiller | 815B Compactor | |
| 619 | 1999 | INGERSOLL | Indersoll-Rand Roller Model: PT125 | |
| 620 | 1999 | INGERSOLL | Indersoll-Rand Roller Model: SD100F | |
| 634 | 1997 | BOMAG | BW-213D DH | |
| 637 | 2002 | Caterpillar | PS150B Pneumatic Roller | |
| 638 | 2002 | Caterpillar | PS150B Pneumatic Roller | |
| 651 | 2005 | Caterpillar | CP323C Roller | |
| 669 | 2008 | Caterpillar | Smooth Drum Roller | |
| 676 | 2010 | Caterpillar | CB34 Vibratory Compactor | |
| 679 | 2010 | Dynapac | CA250PD Roller | |
| 695 | 2014 | Dynapac | CA2500PD 84" Padfoot Roller | **terp 3378 |
| 703 | 2007 | Caterpillar | CB-214E Asphalt Roller | |
| 704 | 2002 | Caterpillar | CD-214D Asphalt Roller | |
| 706 | | Wacker | Asphalt Roller (Formerly Jerusalem) | |
| 711 | 2015 | Dynapac | CA2500PD 84" Padfoot Roller | |
| **SCREENERS** | | | | |
| 673 | 2010 | Nichols | Screenr | |

**TISEO PAVING COMPANY** ATTACHMENT C

SCHEDULE OF EQUIPMENT

| Co # | Model Yr | Manufacturer | Model | Description |
|---|---|---|---|---|
| **TRAILERS** | | | | |
| | | | | |
| 549 | 1985 | Custom | Larger Asphalt Trailer | 490087K |
| 550 | 1987 | Custom | 16' Utility Trailer | 097898K |
| 551 | 1986 | Custom | 16' 1,000 Gal w/Fuel Pump | ***No Longer Registered*** |
| 552 | 1987 | Custom | 16' Jenny Mule HPW1505 Steam Cleaner | 490090K |
| | 2000 | Renew April | 2 Wheel Saw Trailer | 76071B |
| 671 | 2009 | Custom | 16' Flat Bed (Car Carrier) | 16872F |
| 636 | 2002 | Talbert | Lowboy Trailer | Y51806 |
| 659 | 2007 | Trail King | Lowboy Trailer | X33558 |
| 672 | 2010 | TXMX | LawnMower Trailer | 95144F |
| 681 | 2011 | Big Tx | 14" Tilt Trailer | 29432J |
| 689 | 2014 | Big Tx | 18' Trailer | 067457K |
| 690 | 2015 | XL | Lowboy Trailer | Z03733 |
| 721 | 2018 | Troxell | Viking "Pig" Storage | 803988K |
| 722 | 2018 | Big Tx | Chiller Trailer | 072643K |
| 723 | 2017 | Big Tx | Trailer | 185207K |
| TR1 | 1996 | Dorsey | Box Trailer Used as Sign | Lowboy |
| TR2 | 1996 | Dorsey | Box Trailer Used as Sign | Lowboy |
| TR3 | 1996 | Dorsey | Box Trailer Used as Sign | Lowboy |
| 724 | 2019 | Big TX | 20' Trailer | 142935K |
| 733 | 2021 | Troxell | Storage Tank "Pig" | |
| TR4 | | WS | Office Trailer | WM-03539 |
| 736 | 2021 | Retesa | Storage Tank "Pig" | 178C501 |
| 738 | 2021 | Retesa | Storage Tank "Pig" | 160B998 |

**Requires CDL**

**TISEO PAVING COMPANY** ATTACHMENT C

SCHEDULE OF EQUIPMENT

| Co # | Model Yr | Manufacturer | Model | Description |
|---|---|---|---|---|
| **TRIMMERS** | | | | |
| 618 | 2000 | Gomaco | 9000 Placer/Trimmer | |
| 655 | 2006 | Gomaco | 9000 Concrete Placer & New Left Hand Curb Profile Insert | |
| 693 | 2014 | Gomaco | 9500 Trimmer | |
| | 1993 | Gomaco | 10' x 8' Trimmer Head for 587 | Stock # 18399 |
| | 2002 | Gomaco | Extra Trimmer Head for 618 | |
| **LASERS** | | | | |
| LS1 | 2004 | Topcon | Laser | |
| LS2 | 2004 | Tapcon | Laser | |
| LS3 | 2013 | NTS | Pipe Laser | |
| **SHOP EQUIPMENT (MISC)** | | | | |
| 5000 | 1992 | Par Car | Electric Golf Cart | |
| 5001 | | Landa | Pressure Washer Bolt in Shop | In Yard Next Door |
| 5002 | 1994 | Caterpillar | V50D Forklift | |
| 5003 | 1999 | American | Mechanics Lift | |
| 5004 | 2007 | Caterpillar | Forklift | P6000 |
| 5005 | | Hotsy | Pressure Washer - On Trailer | |
| 5006 | 2015 | | Diagnositic Machine | |
| 5007 | 2008 | Vermeer | Wood Chipper | BC1000XL |
| 5008 | 2019 | Landa | Pressure Washer | |
| 5009 | 2020 | Kenco | Barrier Lift | KL30000 |

List of ALL Municipal and Similar Non-Municipal current and completed projects for the past three (3) years. (Use additional sheets if necessary.)

1. Project: *See Attached

Current Status: _____

Any Litigation Issues: Yes or No (Circle One) If Yes, explain: _____

_____

_____

_____

Any Verified Safety Violations: Yes or No (Circle One) If Yes, explain: _____

_____

_____

_____

Project Description: _____

Owner/Agency: _____

Year Built: _____ Contract Price: _____

Contact Person: _____ Phone: _____

2. Project: _____

Current Status: _____

Any Litigation Issues: Yes or No (Circle One) If Yes, explain: _____

_____

_____

_____

Any Verified Safety Violations: Yes or No (Circle One) If Yes, explain: _____

_____

_____

Project Description:_____

Owner/Agency:_____

Year Built:_____ Contract Price:_____

Contact Person:_____ Phone:_____

3. Project:_____

Current Status:_____

Any Litigation Issues: Yes or No (Circle One) If Yes, explain:_____

_____

_____

_____

Any Verified Safety Violations: Yes or No (Circle One) If Yes, explain:_____

_____

_____

_____

Project Description:_____

Owner/Agency:_____

Year Built:_____ Contract Price:_____

Contact Person:_____ Phone:_____

4. Project:_____

Current Status:_____

Any Litigation Issues: Yes or No (Circle One) If Yes, explain:_____

_____

_____

Any Verified Safety Violations: Yes or No (Circle One) If Yes, explain:_____

Project Description:_____

Owner/Agency:_____

Year Built:_____ Contract Price:_____

Contact Person:_____ Phone:_____

5. Project:_____

Current Status:_____

Any Litigation Issues: Yes or No (Circle One) If Yes, explain:_____

Any Verified Safety Violations: Yes or No (Circle One) If Yes, explain:_____

Project Description:_____

Owner/Agency:_____

Year Built:_____ Contract Price:_____

Contact Person:_____ Phone:_____

6. Project:_____

Current Status:_____

Any Litigation Issues: Yes or No (Circle One) If Yes, explain:_____

_____

_____

_____

Any Verified Safety Violations: Yes or No (Circle One) If Yes, explain:_____

_____

_____

_____

Project Description:_____

Owner/Agency:_____

Year Built:_____ Contract Price:_____

Contact Person:_____ Phone:_____

7. Project:_____

Current Status:_____

Any Litigation Issues: Yes or No (Circle One) If Yes, explain:_____

_____

_____

_____

Any Verified Safety Violations: Yes or No (Circle One) If Yes, explain:_____

_____

_____

_____

Project Description:_____

Owner/Agency:_____

Year Built:_____ Contract Price:_____

Contact Person:_____ Phone:_____

8. Project:_____

Current Status:_____

Any Litigation Issues: Yes or No (Circle One) If Yes, explain:_____

_____

_____

_____

Any Verified Safety Violations: Yes or No (Circle One) If Yes, explain:_____

_____

_____

_____

Project Description:_____

Owner/Agency:_____

Year Built:_____ Contract Price:_____

Contact Person:_____ Phone:_____

9. Project:_____

Current Status:_____

Any Litigation Issues: Yes or No (Circle One) If Yes, explain:_____

_____

_____

_____

Any Verified Safety Violations: Yes or No (Circle One) If Yes, explain:_____

_____

_____

# TISEO PAVING COMPANY PROJECTS

| JOB NO | DESCRIPTION | CONTRACT AMOUNT | OWNER | OWNER PHONE NO. | CONTACT NAME | PERCENT COMPLETE |
|---|---|---|---|---|---|---|
| 2647 | WADE SETTLEMENT | $ 1,335,816.75 | MARIO SINACOLA | 214-387-3900 | DAREN LESLEY | 100 |
| 2648 | COCKRELL HILL | $ 11,678,866.45 | DALLAS COUNTY | 214-653-6423 | JOHN MEARS | 100 |
| 2649 | WELLINGTON | $ 8,375,295.75 | CITY OF FORT WORTH | 214-920-8076 | ERIC HANSEN | 100 |
| 2650 | INDIAN TRACE | $ 364,003.44 | CITY OF WAXAHACHE | 469-309-4000 | ROBERT MURPHY | 100 |
| 2651 | KLLM TRANSPORT | $ 55,681.10 | KLLM TRANSPORT | | | 100 |
| 2652 | WOODBINE ST. | $ 2,335,514.53 | TOWN OF FLOWER MND | 972-874-6400 | BRIAN WALTENBUR | 100 |
| 2653 | G. SW PARKWAY | $ 12,688,471.60 | CITY OF GRAND PRAIRIE | 972-237-8145 | ROMIN KHAVARI | 100 |
| 2654 | RIDGEDALE/GLEN | $ 5,972,671.00 | CITY OF GARLAND | 214-387-3900 | JOE SCOTT | 100 |
| 2655 | STACY ROAD | $ 4,889,573.25 | TOWN OF FAIRVIEW | 972-886-4235 | JAMES CHANCELL | 100 |
| 2656 | RIDGEVIEW DRIVE | $ 106,332.00 | MARIO SINACOLA | 214-387-3900 | DAREN LESLEY | 100 |
| 2657 | FM 3549 | $ 9,250,063.46 | TX DOT | 972-962-7216 | ROBERT WILEMON | 100 |
| 2658 | COIT ROAD | $ 3,985,024.20 | CITY OF FRISCO | 972-335-5580 | SHAHRZAD TAVANA | 100 |
| 2659 | GARDENVIEW DR | $ 625,863.20 | CITY OF DALLAS | 214-942-4250 | Horacio Pizzarello | 100 |
| 2660 | IH 30 COLLECTOR | $ 50,743.86 | PRIVATE | | | 100 |
| 2661 | SOUTHPORT LOG | $ 2,281,141.02 | AMAZON | 214-888-2341 | TODD BLACKWELL | 100 |
| 2662 | ENCLAVE/FRISCO | $ 337,148.24 | CENTURIAN AMERICA | 972-824-6334 | CHRIS HODGESON | 100 |
| 2663 | INDIAN HILLS | $ 1,162,677.95 | CITY OF WAXAHACHE | 469-309-000 | ROBERT MURPHY | 100 |
| 2664 | YUCCA DRIVE | $ 2,064,583.15 | TOWN OF FLOWER MND | 972-874-6400 | BRIAN WALTENBUR | 100 |
| 2665 | PARKWAY BLVD | $ 7,061,912.50 | CITY OF COPPELL | 972-304-7090 | KUMAR GALI | 100 |
| 2666 | FATE DOWNTOWN | $ 4,151,468.50 | CITY OF FATE | 972-772-3343 | SCOTT MONAGHAN | 100 |
| 2667 | WHITE CHAPEL | $ 13,424,245.95 | CITY OF SOUTHLAKE | 501-831-0716 | BRENT ANDERSON | 61 |
| 2668 | FT. WORTH AVE. | $ 499,195.50 | CITY OF DALLAS | 972-942-4250 | Horacio Pizzarello | 100 |
| 2669 | W. BELT LINE ROAD | $ 740,089.00 | CITY OF RICHARDSON | 972-744-4285 | ED WITKOWSKI | 100 |
| 2670 | HIGHLAND DRI VE | $ 1,095,893.25 | CITY OF ROCKWALL | 972-771-7746 | JEREMY WHITE | 100 |
| 2672 | LAKESHORE DR | $ 9,343,280.80 | CITY OF ROCKWALL | 972-771-7746 | JEREMY WHITE | 100 |
| 2673 | 2018 MISC TURNS | $ 4,929,605.20 | CITY OF FRISCO | 972-335-5580 | SHAHRZAD TAVANA | 100 |
| 2674 | GUS THOMASSON | $ 12,068,789.00 | CITY OF MESQUITE | 972-216-6217 | MATT HOLZAPHEL | 100 |
| 2675 | RUFE SNOW | $ 235,259.51 | SJ LOUIS | 817-477-0320 | GARY BUSHLOVE | 100 |
| 2676 | LAKE RIDGE DR. | $ 399,625.00 | CITY OF GRAND PRAIRIE | 972-237-8145 | ROMIN KHAVARI | 100 |
| 2678 | HILLCREST | $ 767,251.95 | CITY OF FRISCO | 972-335-5580 | SHAHRZAD TAVANA | 100 |
| 2679 | MORRIS ROAD | $ 4,630,411.95 | TOWN OF FLOWER MND | 972-874-6400 | BRIAN WALTENBUR | 100 |
| 2680 | REEDER ROAD | $ 1,378,127.15 | RPM XCONSTRUCTION | 469-585-3764 | MIKE BULLA | 100 |
| 2681 | ASPEN MEADOWS | $ 1,871,309.00 | UTILITY DISTRICT | 214-803-3807 | KIRBY JONES | 100 |
| 2682 | SACHSE ROAD | $ 9,159,814.43 | DALLAS COUNTY | 214-653-6423 | JOHN MEARS | 43 |
| 2683 | TOWN EAST BLVD. | $ 12,963,840.55 | CITY OF MESQUITE | 972-216-6217 | MATT HOLZAPHEL | 27 |
| 2685 | LAS COLINAS PH3 | $ 7,446,002.90 | CITY OF IRVING | 972-721-2784 | DAVID SPRINGBOB | 100 |
| 2687 | NORTH TEEL PKWY | $ 5,798,446.00 | CITY OF FRISCO | 973-335-5580 | TIN | 100 |
| 2688 | EDEN ROAD | $ 17,383,538.00 | CITY OF ARLINGTON | 817-459-6363 | ANDREA RUALES | 100 |
| 3589 | SUNRISE ROAD | $ 5,629,464.55 | DALLAS COUNTY | 214-653-6423 | RAY BANKS | 100 |
| 2690 | GRAYHAWK PH 1 | $ 832,388.80 | MM MESQUITE | 469-892-7200 | ROME BARNES | 100 |
| 2692 | LEGACY DRIVE | $ 569,008.60 | BEAM SCONSTRUCTIONN | 469-352-4612 | ANTHONY NELSON | 100 |
| 2693 | ROCKHILL PKWY | $ 6,251,384.65 | CITY OF FRISCO | 973-335-5580 | TIN NGUYEN | 100 |
| 2694 | IRON HORSE | $ 2,571,497.32 | MM MESQUITE | 469-892-7200 | ROME BARNES | 100 |
| 2695 | CALENDAR RD | $ 7,933,906.00 | CITY OF ARLINGTON | 817-459-6363 | ANDREA RUALES | 43 |
| 2696 | WHITEWING TR | $ 3,364,894.31 | MM PRINCETON | 469-892-7200 | CHRIS HODGESON | 100 |
| 2697 | COMMERCE 635 | $ 4,752,868.00 | HILLWOOD CONST. | 972-201-2930 | RUSTY BRATTON | 95 |
| 2698 | HURRICANE CREEK | $ 3,196,849.24 | CADG HURRICANE | 469-892-7200 | CHRIS HODGESON | 100 |
| 2699 | MELISSA ROAD | $ 8,969,078.85 | CITY OF MELISSA | 575-942-1693 | JAVIER GARCIA | 26 |
| 2700 | LAUREL & BARTLETT | $ 986,351.85 | TOLL BROTHERS | 214-871-3311 | JONATHAN GAN | 100 |
| 2701 | COIT ROAD WIDENIN | $ 6,905,402.45 | CITY OF FRISCO | 972-292-5417 | MARK MISUN | 61 |
| 2702 | MIDWAY ROAD | $ 30,996,834.25 | TOWN OF ADDISON | 214-837-0955 | PATRICK DIVINEY | 3 |
| 2703 | ASPEN MEADOWS 2 | $ 703,962.25 | THE LAKES FWSD | 214-221-9955 | KIRBY JONES | 100 |
| 2704 | THE STATION | $ 1,589,216.05 | PMB STATION DEVELOPE | 214-387-3841 | DAVID BARTON | 62 |
| 2705 | EDGEWATER | $ 2,162,982.40 | NEW SHERIDAN DEV CO | 214-387-3841 | DAVID BARTON | 0 |
| 2706 | FISHTRAP TROAD | $ 2,627,010.55 | TOWN OF PROSPER | 817-665-7183 | JERICO ROBLES | 10 |
| 2707 | DENTON MIDDLE SC | $ 1,351,347.45 | MILLER SIERRA | | | 0 |
| 2708 | LAZY RIVER ADDITIO | $ 256,551.60 | G8 BUILDERS, INC. | | | 0 |
| 2709 | WINN RIDGE PHASE | $ 1,238,620.20 | CADG COMANCHE 248 LL | 214-221-9955 | PETITT & ASSOCIATES | 0 |
| 2710 | GREENBRIAR ROAD | $ 783,964.58 | FATE 130 COMMERCIAL LP | 469-301-0710 | LJA ENGINEERING INC | 0 |
| 2711 | HARVEST PHASE 7 | $ 1,057,331.25 | BELMONT FRESH WATER SU | 972-488-3880 | JONES CARTER | 0 |
| 2712 | HARVEST PHASE 8A | $ 797,432.20 | BELMONT FRESH WATER SU | 972-488-3880 | JONES CARTER | 0 |
| 2713 | HARVEST PHASE 8B | $ 978,953.55 | BELMONT FRESH WATER SU | 972-488-3880 | JONES CARTER | 0 |
| 2714 | FIRESIDE BY THE LA | $ 2,580,818.55 | DALLAS CO MUNICIPAL UTILI | 972-738-6187 | LEE RADLEY | 0 |
| 2715 | IRVING BLVD | $ 22,221,376.74 | IRVING | | | 0 |
| 2716 | HARVEST PHASE 9 | $ 977,491.45 | BELMONT FRESH WATER SU | 972-488-3880 | JONES CARTER | 0 |
| 2717 | WAVERLY ESTATAE | $ 2,697,543.25 | DR HORTON | | | 0 |
| 2718 | EAST OVERTON ROA | $ 1,789,440.00 | CITY OF DALLAS | | | 0 |
| 2720 | BAYSIDE NORTH PH | $ 916,895.55 | MM BAYSIDE 22 LLC | 972-701-9636 | CHRISTOPHER BLEY | 0 |
| 2721 | LAKE BREEZE ESTA | $ 992,626.65 | LAVON LAKE BREEZE ESTA | 214-370-3470 | BRYAN KLEIN | 0 |
| 2722 | WHITEWING TRAILS | $ 5,276,939.40 | MM PRINCETON 854 LLC | 575-808-1211 | SHAWN FORT, CFM | 0 |
| 2723 | BRONCO WAY | $ 1,289,032.50 | MILLER SIERRA | | | 0 |

ALL PROJECT HAVE PERFORMANCE AND PAYMENT BONDS IN FORCE FROM:
HARTFORD INSURANCE COMPANIES
ONE HARTFORD PLAZA
HARTFORD, CT 06115

AGENT:
VALENTI TROBEC CHANDLER AGENCY
(248)828-3377

**NO LITIGATION OR SAFETY VIOLATIONS**

# TISEO PAVING CO.
# REFERENCES

**Mansfield Road**
City of Cedar Hill
Steve Schell
steve.schell@cedarhilltx.com
(972)291-5126
$21,038,333.46
Finish Date: January 25, 2018

**Country Club Road**
City of Garland
Scott Hale
shale@garlandtx.gov
(214)387-3900
$3,340,675.00
Finish Date: January 31, 2018

**Mountain Creek Road**
Dallas County Public Works
John Mears
john.mears@dallascounty.org
(214)653-6435
$9,429,080.00
Finish Date: September 30, 2019

**Dallas North Estates**
City of Plano
Husain Hamza
husainh@plano.gove
(972)941-7152
$2,923,373.50
Finish Date: September 30, 2018

**Dallas Parkway Phase 2**
City of Frisco
Matthew Phillips
mphillips@friscotexas.gov
(972)335-5580
$8,401,611.46
Finish Date: September 24, 2019

**Las Colinas Blvd.**
City of Irving
David Springob
dspringob@cityofirving.org
(972)721-2784
$11,752,258.35
Finish Date: April 2, 2019

Project Description:_____

Owner/Agency:_____

Year Built:_____ Contract Price:_____

Contact Person:_____ Phone:_____

10. Project:_____

Current Status:_____

Any Litigation Issues: Yes or No (Circle One) If Yes, explain:_____

Any Verified Safety Violations: Yes or No (Circle One) If Yes, explain:_____

Project Description:_____

Owner/Agency:_____

Year Built:_____ Contract Price:_____

Contact Person:_____ Phone:_____

Trade references (List Company, Address, Contact Person, and Phone):

*See Attached

Bank References (List Institution, Address, Contact Person, and Phone)

# TISEO PAVING CO.
# CREDIT APPLICATION

| General Information | | | | | |
|---|---|---|---|---|---|
| Phone No.: | (972)289-0723 | | | Fax No.: | (972)216-5637 |
| Mailing Address: | P.O. Box 270040 | | | | |
| City: | Dallas | State: | TX | Zip: | 75227-0040 |
| Physical Address: | 419 US Hwy. 80E | | | | |
| City: | Mesquite | State: | TX | Zip: | 75150 |
| Website Address: | www.tiseopaving.com | | | | |
| Accounts Payable: | Melanie Taylor | e-mail: | mtaylor@tiseopaving.com | | |

| Ownership Information | | | |
|---|---|---|---|
| Type of Business: | Corporation | Year Est: | 1974 |
| Federal Id # | 38-2209998 | | |
| Prinicipal: | Louis Tiseo, President | | |

| Trade References | | |
|---|---|---|
| Napa Auto Parts | P.O. Box 851590, Mesquite, TX 75185 | (972)288-7614 |
| Holt Equipment | P.O. Box 970455, Dallas, TX 75397-0455 | (972)721-2000 |
| Star Tire | 10952 Harry Hines Blvd., Dallas, TX 75220 | (214)357-5400 |
| Martin Marietta | 1341 W. Mockingbird Lane, Dallas, TX 75247 | (972)647-6700 |

| Bank Reference: | | | |
|---|---|---|---|
| Comerica Bank-Texas | | Christy Hoverter | (972)361-2648 |
| 4100 Spring Valley , Suite 400, Dallas, TX 75244 | | Account #: | 1880218811 |

Applicant's signature below certifies that all information on this form is correct and applicant attests to financial responsibilities and ability and willingness to pay invoices.

Signature

Jesica Cardenas
Printed Name

Administrative Assistant
Title

21-Oct-21
Date

| | |
|---|---|
| Martin Marietta Fax Number: | (972)647-3963 |
| Napa Auto Parts Fax Number: | (678)421-5600 |
| Holt Equipment Fax Number | (972)721-2935 |
| Star Tire Fax Number: | (214)357-5761 |

Claims and Suits (if the answer to any of the following questions is yes, please attached details):

1. Has your organization ever failed to complete any work awarded to it? NO

2. Are there any judgments, claims, arbitration proceedings, or suits pending or outstanding against your organization or officers? NO

3. Has your organization filed any lawsuits or requested arbitration with regard to construction contracts within the last five years? NO

4. Within the last five (5) years, has any officer or principal of your organization ever been an officer or principal of another organization when it failed to complete a construction contract? NO

I, Louis Tiseo ,being duly sworn deposes and says that the information provided herein is true and sufficiently complete so as not to be misleading.

Date this 21 day of October , 20 21 .

Name of Organization: Tiseo Paving Co.

By: [signature]

Title: President

**STATE OF TEXAS**

**COUNTY OF DALLAS**

**BEFORE ME** the undersigned authority, on this day personally appeared _____

Louis Tiseo , known to me to be the person whose name subscribed to the foregoing instrument, and acknowledged to me that he executed the same for the purposes and considerations therein expressed.

**GIVEN UNDER MY HAND AND SEAL OF OFFICE** this 21 day of October 20 21 .

JESICA CARDENAS
Notary Public
State of Texas
ID # 13188030-2
My Comm. Expires 02-04-2023

[signature]

Notary Public in and for Dallas County, Texas

SECTION CA

# CONTRACT AGREEMENT

# CONTRACT AGREEMENT

STATE OF TEXAS

COUNTY OF DALLAS

THIS AGREEMENT is made and entered into this _____ day of _____, 2021, by and between the Town of Addison, of the County of Dallas and State of Texas, acting through its City Manager, thereunto duly authorized so to do, Party of the First Part, hereinafter termed the OWNER, and _____, of the City of _____, County of _____, State of _____, Party of the Second Part, hereinafter termed CONTRACTOR.

WITNESSETH: That for and in consideration of the payment and agreement hereinafter mentioned, to be made and performed by the OWNER, the said CONTRACTOR hereby agrees with the said OWNER to commence and complete construction of certain improvements as follows:

**BELLA LANE SOUTH EXTENSION & ALPHA ROAD CONNECTOR**

**PUBLIC WORKS AND ENGINEERING SERVICES BID NUMBER 21-69**

and all extra work in connection therewith, under the terms as stated in the General and Specific Conditions of the AGREEMENT; and at his own proper cost and expense to furnish all the materials, supplies, machinery, equipment, tools, superintendence, labor, insurance and other accessories and services necessary to complete the said construction, in accordance with the conditions and prices stated in the Proposal attached hereto and in accordance with the ~~Advertisement for Bids, Instructions to Bidders, General Provisions, Special Provisions, Plans, and other drawings and printed or written explanatory matter thereof, and the Technical Specifications and Addenda thereto~~ Contract Documents~~, as prepared by the OWNER, each of which has been identified by the endorsement of the CONTRACTOR and the OWNER thereon, together with the CONTRACTOR's written Proposal and the General Provisions, all of which are made a part hereof and collectively evidence and constitute the entire AGREEMENT.~~.

The Contract Documents shall consist of the following documents:

1. this Contract Agreement;
2. properly authorized change orders;
3. any listed and numbered addenda;
4. the Special Provisions;
5. Technical Specifications & Construction Drawings;
6. the OWNER's Standard Construction Details;
7. the October 2017 5th Edition of the Public Works Construction Standards - North Central Texas as amended and published by the North Central Texas Council of Governments, as amended by the Owner (collectively, the "NCTCOG Specifications ");
8. the OWNER's written notice to proceed to the CONTRACTOR;

9. the Contractor's Bid Proposal;

10. the Performance, Payment, and Maintenance Bonds; and,

11. any other bid materials distributed by the Owner that relate to the Project.

These Contract Documents are incorporated by reference into this Construction Agreement as if set out here in their entirety. The Contract Documents are intended to be complementary; what is called for by one document shall be as binding as if called for by all Contract Documents. It is specifically provided, however, that in the event of any inconsistency in the Contract Documents, the inconsistency shall be resolved by giving precedence to the Contract Documents in the order in which they are listed herein above. If, however, there exists a conflict or inconsistency between the Technical Specifications and the Construction Drawings it shall be the Contractor's obligation to seek clarification as to which requirements or provisions control before undertaking any work on that component of the project. Should the Contractor fail or refuse to seek a clarification of such conflicting or inconsistent requirements or provisions prior to any work on that component of the project, the Contractor shall be solely responsible for the costs and expenses - including additional time - necessary to cure, repair and/or correct that component of the project.

The CONTRACTOR hereby agrees to commence work within ten (10) calendar days after the date of written notice to do so shall have been given to him, to complete the work within three hundred and thirty (330) calendar days, after he commences work, subject to such extensions of time as are provided by the General Provisions.

The OWNER agrees to pay the CONTRACTOR _____ _____ Dollars ($_____) in current funds for the performance of the Contract in accordance with the Proposal submitted thereof, subject to additions and deductions, as provided in the General Provisions, and to make payments of account thereof as provided therein.

IN WITNESS WHEREOF, the parties of these presents have executed this AGREEMENT in the year and day first above written.

**TOWN OF ADDISON, TEXAS (OWNER)**

By: _____
City Manager

**ATTEST:**

By: _____

(CONTRACTOR)

By: _____

ATTEST:

By: _____

The following to be executed if the CONTRACTOR is a corporation:

I, _____ certify that I am the secretary of the corporation named as CONTRACTOR herein; that _____, who signed this Contract on behalf of the CONTRACTOR is the _____ (official title) of said corporation; that said Contract was duly signed for and in behalf of said corporation by authority of its governing body, and is within the scope of its corporate powers.

Signed: _____

Corporate Seal

**SECTION PrB**

# PERFORMANCE BOND

**PERFORMANCE BOND**

STATE OF TEXAS }
COUNTY OF DALLAS }

WHEREAS, _____ as principal ("Contractor") and _____, a corporation organized under the laws of _____ and being duly authorized to do business in the State of Texas, as surety ("Surety")(whether one or more), do hereby expressly acknowledge themselves to he held and bound to pay to the Town of Addison, Texas, a home-rule municipality organized and operating under the Constitution and laws of the State of Texas (the "Town"), its successors and assigns, and to all persons, firms, subcontractors and corporations who may furnish materials or labor under the contract as more fully described below, the sum of _____ Dollars in the lawful currency of the United States of America ($ ) for the payment of which Contractor and Surety are liable to the Town, jointly and severally; and

WHEREAS, Contractor has this day entered into a written contract with the Town to build and construct _____ _____ _____ which contract and the plans and specifications therein mentioned (collectively referred to hereinafter as the "Contract") are hereby expressly incorporated into and made a part hereof as though set forth at length; and

WHEREAS, this bond is given pursuant to Chapter 2253 of the Texas Government Code;

NOW, THEREFORE, if Contractor shall well, truly and faithfully perform all of the undertakings, duties, terms, conditions and agreements of the Contract; shall satisfy all claims and demands incurred under the Contract; shall fully indemnify and hold the Town harmless; shall reimburse and repay the Town for any outlay or expense which the Town may incur in making good any default, and shall promptly make payment to all persons, firms, subcontractors and corporations who may furnish materials or labor under the Contract, then this obligation shall be void; otherwise to remain in full force and effect. The obligations of Contractor and Surety under this bond apply both to the original Contract and to any extension or modification of the Contract and Surety agrees that no change, extension of time, addition, expansion or other modification of the Contract, the work to be done under the Contract, or the plans and specifications which are a part of the Contract shall in any manner affect the obligations of Surety under this bond, and Surety waives notice of any such change, extension of time, addition, expansion or other modification. The obligations of Contractor and Surety under this bond are performable and payable in Dallas County, Texas such that exclusive venue for any legal action pertaining to this bond shall lie in Dallas County, Texas. By their signatures below, the persons signing this bond warrant and represent that they are, respectively, duly authorized to sign on behalf of Contractor and Surety.

EXECUTED this the _____ day of _____, 2_____.

CONTRACTOR: SURETY: 1

By:_____ By:_____

Title:_____ Title:_____

ACKNOWLEDGMENTS
[Contractor]

STATE OF TEXAS }
COUNTY OF DALLAS }

Before me _____ (insert the name of the officer) on this day _____ personally appeared _____ known to me (or proved to me on the oath of _____) or through _____ (description of identity card or other document) to be the person whose name is subscribed to the forgoing instrument and acknowledged to me that he/she executed the same for the purpose and consideration therein expressed.

Given under my hand and seal of office this _____ day of _____, 2_____.

_____ _____
Notary Public in and for the State of Texas Typed or Printed Name of Notary
My Commission Expires:_____

[Surety]

STATE OF TEXAS }
COUNTY OF DALLAS }

This instrument was acknowledged before me on the ____day of _____, 2_____ by _____ who is the _____ of the Surety, on behalf of Surety.

GIVEN UNDER MY HAND AND SEAL OF OFFICE this the _____ day of _____, 2_____.

_____ _____
Notary Public in and for the State of Texas Typed or Printed Name of Notary

My Commission Expires:_____

1 Please see attached contact sheet for Surety and the Texas Department of Insurance.

## Payment and Performance Bond Contact Sheet

(1) Claims:

All notices of claims shall be sent to the surety at the following address:

Hartford Fire Insurance
(Name of surety)

One Hartford CTR, Hartford, CT 06115
(Mailing address)

One Hartford CTR, Hartford, CT 06115
(Physical address)

(248) 828-3377
(Phone number)

(2) Texas Department of Insurance Contact Number:

The address and contact information of the surety may otherwise be obtained by contacting the Texas Department of Insurance at the following toll free telephone number:

**1-800-252-3439.**

**SECTION PyB**

# PAYMENT BOND

**PAYMENT BOND**

STATE OF TEXAS }
COUNTY OF DALLAS }

WHEREAS, _____, as principal ("Contractor") and _____, a corporation organized under the laws of _____ and being duly authorized to do business in the State of Texas, as surety ("Surety")(whether one or more), do hereby expressly acknowledge themselves to he held and bound to pay to the Town of Addison, Texas, a home-rule municipality organized and operating under the Constitution and laws of the State of Texas (the "Town"), its successors and assigns, and to all persons, firms, subcontractors and corporations who may furnish materials or labor under the contract as more fully described below, the sum of _____ Dollars in the lawful currency of the United States of America ($ ) for the payment of which Contractor and Surety are liable to the Town, jointly and severally; and

WHEREAS, Contractor has this day entered into a written contract with the Town to build and construct _____
_____

which contract and the plans and specifications therein mentioned (collectively referred to hereinafter as the "Contract") are hereby expressly incorporated into and made a part hereof as though set forth at length; and

WHEREAS, this bond is given pursuant to Chapter 2253 of the Texas Government Code;

NOW, THEREFORE, if Contractor shall promptly make payment to all persons, firms, subcontractors and corporations who may furnish materials or labor under the Contract, then this obligation shall be void; otherwise to remain in full force and effect. The obligations of Contractor and Surety under this bond apply both to the original Contract and to any extension of time or modification of the Contract and Surety agrees that no change, extension of time, addition, expansion or other modification of the Contract, the work to be done under the Contract, or the plans and specifications which are a part of the Contract shall in any manner affect the obligations of Surety under this bond, and Surety waives notice of any such change, extension of time, addition, expansion or other modification. The obligations of Contractor and Surety under this bond are performable and payable in Dallas County, Texas such that exclusive venue for any legal action pertaining to this bond shall lie in Dallas County, Texas. By their signatures below, the persons signing this bond warrant and represent that they are, respectively, duly authorized to sign on behalf of Contractor and Surety.

EXECUTED this the _____ day of _____, 2_____.

CONTRACTOR: SURETY: 1

By:_____ By:_____

Title:_____ Title:_____

ACKNOWLEDGMENTS
[Contractor]

STATE OF TEXAS }
COUNTY OF DALLAS }

Before me _____ (insert the name of the officer) on this day _____ personally appeared _____ known to me (or proved to me on the oath of _____) or through _____ (description of identity card or other document) to be the person whose name is subscribed to the forgoing instrument and acknowledged to me that he/she executed the same for the purpose and consideration therein expressed.

Given under my hand and seal of office this _____ day of _____, 2_____.

_____ _____
Notary Public in and for the State of Texas Typed or Printed Name of Notary
My Commission Expires:_____

[Surety]

STATE OF TEXAS }
COUNTY OF DALLAS }

This instrument was acknowledged before me on the _____ day of _____, 2_____ by _____ who is the _____ of the Surety, on behalf of Surety.

GIVEN UNDER MY HAND AND SEAL OF OFFICE this the _____ day of _____, 2_____.

_____ _____
Notary Public in and for the State of Texas Typed or Printed Name of Notary

My Commission Expires:_____

1 Please see attached contact sheet for Surety and the Texas Department of Insurance

## Payment and Performance Bond Contact Sheet

(1) Claims:

All notices of claims shall be sent to the surety at the following address:

Hartford Fire Insurance
(Name of surety)

One Hartford CTR, Hartford, CT 06115
(Mailing address)

One Hartford CTR, Hartford, CT 06115
(Physical address)

(248) 828-3377
(Phone number)

(2) Texas Department of Insurance Contact Number:

The address and contact information of the surety may otherwise be obtained by contacting the Texas Department of Insurance at the following toll free telephone number:

**1-800-252-3439.**

**SECTION MB**

# MAINTENANCE BOND

**MAINTENANCE BOND – TWO YEAR**

STATE OF TEXAS '

COUNTY OF DALLAS '

WHEREAS,_____, as principal ("Contractor") and _____, a corporation organized under the laws of _____ and being duly authorized to do business in the State of Texas, as surety ("Surety")(whether one or more), do hereby expressly acknowledge themselves to he held and bound to pay to the Town of Addison, Texas, a home-rule municipality organized and operating under the Constitution and laws of the State of Texas (the "Town"), its successors and assigns the sum of _____ Dollars in the lawful currency of the United States of America ($ ) for the payment of which Contractor and Surety are liable to the Town, jointly and severally; and

WHEREAS, Contractor has this day entered into a written contract with the Town to build and construct which contract and the plans and specifications therein mentioned (collectively referred to hereinafter as the "Contract") are hereby expressly incorporated into and made a part hereof as though set forth at length; and

WHEREAS, under the Contract it is provided that the Contractor will maintain and keep in good repair all work to be performed and done under the Contract for a period of **two (2) years** from and after its date of final completion and written acceptance by the Town, and to do and perform all necessary work and repair any defective condition, it being understood that the purpose of this maintenance bond is to insure all warranties, express or implied, made or given by the Contractor to the Town and to cover all defective, inadequate or non-conforming conditions arising by reason of any materials or labor installed, provided, constructed or performed by the Contractor and in case the Contractor shall fail to correct any such conditions it is agreed that the Town may make such corrections and charge the cost of making those corrections against the Contractor and the Surety on this obligation, and the Contractor and Surety shall be subject to the liquidated damages provided in the contract, the plans and the specifications for each day's failure on its part to comply with the terms and provisions of the Contract;

NOW, THEREFORE, if the Contractor shall keep and perform its obligation to maintain the work and keep the work in repair for the full maintenance period of two (2) years as herein provided, then these presents shall be null and void and have no further effect, but if default shall be made by Contractor in the performance of its obligations, then these presents shall have full force and effect, and the Town shall have and recover from the Contractor and its Surety damages in the premises as provided and it is further understood and agreed that this obligation shall be a continuing one against the Contractor and the Surety and that successive recoveries may be had hereon for successive breaches until the full amount of this bond shall have been exhausted; and it is further understood that the obligation under this bond to maintain the work shall continue throughout the maintenance period and shall not be changed, diminished, or in any other manner affected during the term of this bond. The obligations of Contractor and Surety under this bond apply both to the original Contract and to any extension or modification of the Contract and Surety agrees that no change, extension of time, addition, expansion or other modification of the Contract, the work to be done under the Contract, or the plans and specifications which are a part of the Contract shall in any manner affect the obligations of Surety under this bond, and Surety waives notice of any such change, extension of time, addition, expansion or other modification. The obligations of Contractor and Surety under this bond are performable and payable in Dallas County, Texas such that exclusive venue for any legal action pertaining to this bond shall lie in Dallas County, Texas. By their signatures below, the persons signing this bond warrant and represent that they are, respectively, duly authorized to sign on behalf of Contractor and Surety.

EXECUTED this the _____ day of _____, 2_____.

| CONTRACTOR: | SURETY: |
|---|---|
| By:_____ | By:_____ |
| Printed Name:_____ | Printed Name:_____ |
| Title:_____ | Title:_____ |
| Address of Principal: | Address of Surety: |
| _____ | _____ |
| _____ | _____ |
| _____ | _____ |

ACKNOWLEDGMENTS

[Contractor]

STATE OF TEXAS '
COUNTY OF DALLAS '

Before me _____(insert the name of the officer) on this day _____ personally appeared _____ known to me (or proved to me on the oath of _____) or through _____ (description of identity card or other document) to be the person whose name is subscribed to the forgoing instrument and acknowledged to me that he/she executed the same for the purpose and consideration therein expressed.

Given under my hand and seal of office this _____ day of _____, 2_____.

_____ _____
Notary Public in and for the State of Texas Typed or Printed Name of Notary
My Commission Expires:_____

[Surety]

STATE OF TEXAS '
COUNTY OF DALLAS '

This instrument was acknowledged before me on the ___ day of _____, 2_____ by _____ who is the _____ of the Surety, on behalf of Surety.

GIVEN UNDER MY HAND AND SEAL OF OFFICE this the _____ day of _____, 2_____.

_____ _____
Notary Public in and for the State of Texas Typed or Printed Name of Notary
2-4-13 2 yr

**SECTION BP**

# CONTRACTOR'S AFFIDAVIT OF BILLS PAID

# CONTRACTOR'S AFFIDAVIT OF BILLS PAID

STATE OF TEXAS

COUNTY OF DALLAS

Personally, before me the undersigned authority, on this day appeared Louis Tiseo who, being duly sworn, on oath, says that he is a legal representative of Tiseo Paving Co.
(full name of Contractor as in contract)

and that the contract for the construction of the project, designated as

**BELLA LANE SOUTH EXTENSION & ALPHA ROAD CONNECTOR**

**INFRASTRUCTURE AND DEVELOPMENT SERVICES BID NUMBER 21-69**

has been satisfactorily completed and that all bills for materials, apparatus, fixtures, machinery and labor used in connection with the construction of this project have, to the best of my knowledge and belief, been fully paid.

Signature

President
Title

Sworn to and subscribed before me this 21 day of October, 2021.

JESICA CARDENAS
Notary Public
State of Texas
ID # 13188030-2
My Comm. Expires 02-04-2023

Notary Public in and for

Dallas County, Texas

**Instructions:**

If the contractor is an individual, he shall sign the affidavit. If the contractor is a partnership, any partner may sign the affidavit. If the contractor is a corporation, a person authorized by the by-laws or by the Board of Directors shall sign the affidavit. If the Contractor is a joint-venture of individuals, any of the individuals may sign the affidavit. If the Contractor is a joint-venture of partnerships, or of individuals and partnerships, the affidavit may be signed by the individual or any partner of any partnership. If the contractor is a joint-venture in which a corporation is a party, separate affidavits must be executed in the name of the joint-venture: one by each corporation and one by each individual or partnership. Signatures for corporations should be by a duly authorized officer. If signature is by another, a showing of authority to sign must accompany the affidavit.

SECTION GP

# GENERAL PROVISIONS

# GENERAL PROVISIONS

The General Provisions of the Contract shall be as stated in the *Standard Specifications for Public Works Construction – North Central Texas, 5th Edition (2017)*, under Division 100, "General Provisions," Items 101.1 through 109.6 inclusive, as amended or supplemented and except as modified by the Special Provisions or Instructions to Bidders.

# SECTION SP

## SPECIAL PROVISIONS

## SPECIAL PROVISIONS

1. **SCOPE OF WORK:** The Work to be performed under the provisions of these Contract Documents shall consist of furnishing all materials, labor, equipment, supplies and appurtenances; providing all construction, plant, equipment and tools; performing all necessary labor and supervision; and the construction complete, including all Work appurtenant thereto, the proposed improvements for: **BELLA LANE SOUTH EXTENSION & ALPHA ROAD CONNECTOR.**

2. **GENERAL:** This Work shall conform to the requirements of the Contract Documents as listed in the Contract Agreement. These Contract Documents are intended to be complementary. The Contractor shall do all work as provided in the Contract Documents shall do such additional Extra work as may be considered necessary to complete the work in a satisfactory and acceptable manner. The Contractor shall furnish all labor, tools, materials, machinery, equipment, and incidentals necessary to the satisfactory prosecution and completion of the Work.

3. **EXAMINATION OF SITE:** The Contractor acknowledges that he has investigated and satisfied itself as to the conditions affecting the Work, including but not restricted to those bearing upon transportation, disposal, handling and storage of materials, availability of labor, water, electric power, roads and uncertainties of weather, or similar physical conditions at the site, conditions of the ground, the character of equipment and facilities needed preliminary to and during prosecution of the Work. The Contractor acknowledges that he has inspected the site of the Work and is familiar with the soil conditions to be encountered. Any failure by the Contractor to acquaint himself with the available information will not relieve him from responsibility for estimating properly the difficulty or cost of successfully performing the Work. The Town of Addison assumes no responsibility for any conclusions or interpretations made by the Contractor on the basis of the information made available by the Town and the Engineer of Record **(Kimley-Horn and Associates, Inc.).**

4. **SPECIFICATIONS:** Construction improvements shall be governed by the following published specifications and details (except as modified by these Special Provisions):

   Standard Specification for Construction and Maintenance of Highways, Streets, and Bridges, Texas Department of Transportation (November 2014);Standard Specifications for Public Works Construction, North Central Texas - North Central Texas Council of Governments (5th edition, 2017); Town of Addison Standard Construction Details;

   The Contractor shall keep copies of applicable Specifications on the Project site at all times.

   Where reference is made to specifications compiled by other agencies, organizations or departments, such referenced specifications are hereby made a part of the Project Specifications.

   Portions of TxDOT standards and specifications, latest editions, shall be incorporated into this contract by specific reference in the contract plans and specifications. In the event of

conflict with other documents, TxDOT standards and specifications shall govern for construction materials and methods. In the event of conflict with other documents, Town of Addison contract documents shall govern for contract procedures and measurement and payment.

5. **SUBSURFACE INVESTIGATION:** Subsurface exploration to ascertain the nature of soils, including the amount of rock, if any, is the responsibility of any and all prospective Bidders. It shall be the responsibility of the Bidders to make such subsurface investigations as he deems necessary to determine the nature of the material to be encountered. Some preliminary subsurface exploration has been performed by the Town of Addison and the Engineer, and is provided to the Contractor in the Contract Documents. This information is provided only as preliminary and all bids shall be based on information obtained by the Contractor. The Town of Addison and the Engineer disclaim any responsibility for the accuracy, true location and extent of the soils information that has been prepared by others. They further disclaim responsibility for interpretation of that data by Bidders, as in projecting soil bearing values, rock profiles, soils stability and the presence, level and extent of underground water.

6. **HISTORICAL, SCIENTIFIC AND ARCHAEOLOGICAL DISCOVERIES:** Contractor shall immediately give an oral and written report to the Town of Addison of the discovery of any articles of historical, scientific, or archaeological significance. Contractor shall take all necessary steps to preserve the article and shall cease operations, which would affect the find until otherwise directed by the Town of Addison but continue with all other unaffected operations. The future operations of Contractor with respect to the discovery, including disposition of the articles, shall be decided by the Town of Addison. The Town of Addison shall have sole and exclusive title to any discovered articles.

The Town of Addison shall investigate the site conditions promptly after receiving the notice. If the conditions do materially so differ and cause an increase or decrease in Contractor's cost of, or the time required for performing any part of the work under the Contract, whether or not changed as a result of conditions, an equitable adjustment will be made and the Contract modified in writing accordingly.

No request by Contractor for an equitable adjustment to the Contract under this Section shall be allowed unless Contractor has given the written notice required. No request by Contractor for an equitable adjustment of the Contract for differing site conditions will be allowed or shall be made after final payment under the Contract.

**ENVIRONMENTAL REQUIREMENTS**: In addition to requirements set forth in other sections of the Contract, including the Plans and Specifications, Contractor shall ensure that the requirements of this Section are fulfilled and incorporated into its procedures and processes as well as those of any Subcontractors. All materials utilized by Contractor on the Project shall comply with all applicable local, state and federal laws and regulations.

A. Contractor is responsible for compliance with any requirements included in the Contract Documents regarding Hazardous Materials. If Contractor encounters a hazardous material or substance not addressed in the Contract Documents and if reasonable

precautions will be inadequate to prevent foreseeable bodily injury or death to persons resulting from a material or substance, including but not limited to asbestos or polychlorinated biphenyl (PCB), encountered on the site by Contractor, Contractor shall, upon recognizing the condition, immediately stop Work in the affected area and report the condition to the Town of Addison in writing.

1. The term "Hazardous Materials" means any substance or compound, whether solid, liquid or gaseous: (i) which is listed, defined or regulated as a "hazardous substance", "hazardous waste", "extremely hazardous waste", "solid waste", "toxic substance", "hazardous substance", "hazardous material" or "regulated substance" or otherwise classified as hazardous or toxic, in or pursuant to any Environmental Law; or (ii) which is or contains asbestos, radon, any polychlorinated biphenyl, urea formaldehyde foam insulation, explosive or radioactive material, lead, or motor fuel or other volatile organic compounds; or (iii) which causes or poses a threat to cause a contamination or nuisance on the Project Site or any adjacent property, or (iv) which causes or poses a threat to cause a hazard to the environment or to the health, safety or welfare of persons on or about the Project Site.

2. The term "Environmental Law" means any federal, state or local law, statute, guidance or policy statement, ordinance, code, rule, regulation, license, authorization, decision, order, injunction or decree, which pertains to health, safety or the environment (including, but not limited to, ground, air, water or noise pollution or contamination, and underground or aboveground tanks) and shall include without limitation, the Comprehensive Environmental Response, Compensation and Liability Act of 1980, as amended, the Resource Conservation and Recovery Act of 1976, as amended, the Occupational Health and Safety Act, the Toxic Substances Control Act, the Texas Water Code and the Texas Solid Waste Disposal Act and any other state or federal environmental statutes.

B. If the material or substance was on the site prior to the issuance of the Notice to Proceed, the Town of Addison shall obtain the services of a licensed laboratory to verify the presence or absence of the material or substance reported by Contractor and, in the event such material or substance is found to be present, to verify that it has been remediated to levels required by the Texas Commission on Environmental Quality. When the material or substance has been remediated, Work in the affected area shall resume upon written direction of the Town of Addison.

C. Except as provided in Subparagraph B., Contractor (with the Town of Addison's prior written approval of the laboratory) shall obtain the services of a licensed laboratory to verify the presence or absence of the material or substance reported by Contractor and, in the event such material or substance is found to be present, the Town of Addison shall determine whether Contractor or the Town of Addison shall have the substance remediated to levels required by the Texas Commission on Environmental Quality. When the material or substance has been remediated, Work in the affected area shall resume upon written direction of the Town of Addison. The Contract time shall be not be extended and the Contract Price shall not be increased, unless the material or substance to be remediated

were not introduced to the Work Site by Contractor, and Contractor shall then pay for (or reimburse the Town of Addison for) the testing and remediation.

D. The Town of Addison shall not be responsible under this Section for materials or substances Contractor brings or introduces to the Project Site. Contractor shall be responsible for the fault or negligence in the use and handling of materials or substances of Contractor, Subcontractor, Sub-subcontractor, or anyone directly or indirectly employed by any of them.

E. Contractor shall indemnify the Town of Addison and its affiliates for any and all damages incurred by the Town of Addison as a result of Contractor's actions with respect to all applicable state and federal environmental laws related to materials or substances Contractor brings to the Project Site, including but not limited to fines, penalties, costs of remediation and reasonable attorney's fees. No time extension shall be granted for breach of this provision.

F. Contractor agrees that it shall not transport to, use, generate, dispose of, or install at the Project Site any Hazardous Materials, except in accordance with applicable environmental laws. Further, in performing the Work, Contractor shall not cause any release of Hazardous Materials into, or contamination of, the environment, including the soil, the atmosphere, any water course or ground water unless required by the Contract Documents. In the event Contractor engages in any of the activities prohibited in this Section or fails to stop Work as provided in this Section, to the fullest extent permitted by law, Contractor hereby indemnifies and holds the Town of Addison, its affiliates and their respective officers, agents, employees and tenants harmless from and against any and all claims, damages, losses, causes of action, suits and liabilities of every kind, including but not limited to, expenses of litigation, court costs, punitive damages and attorneys' fees, arising out of, incidental to or resulting from the activities prohibited in this Section or Contractor's failure to stop Work as required. Contractor shall obtain from manufacturers and furnish to the Town of Addison Materials Safety Data Sheets (OSHA Form 20) for all materials incorporated into the Project by Contractor. The Town of Addison hereby agrees that, as between the Town of Addison and Contractor, the Town of Addison will be responsible for Hazardous Materials on site which existed prior to Contractor performing Work on the Project Site or which are introduced to the Project Site by the Town of Addison, except as provided in this Section. Contractor will not be considered the generator of Hazardous Materials on site which existed prior to Contractor performing Work on the Work Site or which are introduced to the Project Site by the Town of Addison. If the Hazardous Materials were on the Project Site prior to Contractor's presence on the Project Site or were introduced to the Project Site by the Town of Addison, then, if appropriate, the Town of Addison will make an equitable adjustment to the Contract.

G. Include in all construction subcontracts exceeding $100,000, the following requirement: "Contractor is responsible for compliance with all applicable standards, orders, or requirements issued under Section 306 of the Clean Air Act, Section 505 of the Clean Water Act, Executive Order 11738, and Environmental Protection Agency regulations."

H. No request by Contractor for an equitable adjustment to the Contract under this Section shall be allowed unless Contractor has given the written notice required.

I. No request by Contractor for an equitable adjustment of the Contract for Hazardous Materials will be allowed or shall be made after final payment under the Contract.

7. **COMPLIANCE WITH LAWS:** The Contractor shall familiarize himself with the nature and extent of the Specifications, Plans, Project Site conditions, traffic and safety requirements, and shall fully comply with all local, state and federal laws, including all codes, ordinances, rules and regulations applicable to this Contract and the Work to be done hereunder, which exist or which may be enacted later by governmental bodies having jurisdiction or authority for such enactment. The Contractor shall comply with all federal, state and local laws, rules and regulations of every kind and nature applicable to the performance of its Work hereunder, and shall hold the Town of Addison and the Engineer harmless therefrom. No plea of ignorance or misunderstanding thereof will be considered.

8. **PERMITS, LICENSES, AND REGULATIONS:** Permits and licenses for the prosecution of the Work shall be secured and paid for by the Contractor. Any required permit fees will still be paid by the Contractor. Wherever the Work under this contract requires the obtaining of permits from the Town of Addison or other public authorities, duplicate copies of such permits shall be furnished to the Engineer by the Contractor hereunder before the Work covered thereby is started. **NO WORK WILL BE ALLOWED TO PROCEED BEFORE SUCH PERMITS ARE OBTAINED.**

9. **RIGHTS-OF-WAY AND EASEMENTS:** Rights-of-way and permanent easements, dedicated to the Town of Addison, will be secured for this Project and made a part of thereto. The Contractor shall obtain a right-of-way permit from the Town of Addison prior to beginning Work. When working within the public rights-of-way and easements, the Contractor shall at all times observe and comply with all Federal and State Laws, and Town of Addison ordinances and regulations which in any way affect the conduct of the Work or its operations, and shall observe and comply with all orders, laws, ordinances and regulations which exist or which may be enacted later by bodies having jurisdiction or authority for such enactment. No plea of misunderstanding or ignorance thereof will be considered. The Contractor and his Sureties shall indemnify and save harmless the Town of Addison, the Engineer and all of their officers, agents, and employees against any and all claims or liability arising from or based on the violation of any such law, ordinance, regulation, or order, whether it be by itself or its employees.

It shall be the responsibility of the Contractor, prior to the initiation of construction on easements through private property, to inform the property owner of its intent to begin construction. Before beginning construction in areas of public dedication, the Contractor shall inform the agency having jurisdiction in the area forty-eight (48) hours prior to initiation of the Work. All easements shall be cleaned up after use and restored to their original conditions or better.

10. **RESTRICTED WORK HOURS:** Per the Town of Addison Building Regulations, "It shall be unlawful for a person, firm or corporation to excavate, erect, build, construct,

alter, repair or demolish any building or structure which has been issued or which is required to be issued a building permit by the Town of Addison between the hours of 7:00 p.m. and 7:00 a.m. Monday through Friday, and between the hours of 7:00 p.m. and 8:00 a.m. on Saturday and Sunday, if such activity is performed within a residential, apartment, or townhouse zoned area, or within three hundred (300) feet of an occupied residence, except in cases of urgent necessity or in the interest of public safety and convenience, and then only by permit of the City Manager."

11. **COMPLIANCE WITH IMMIGRATION LAWS:** Contractor shall take all steps necessary to ensure that all of the Contractor's employees are authorized to work in the United States as required by the Immigration Reform and Control Act of 1986.

12. **NON-DISCRIMINATION POLICY:** It is the policy of the Town of Addison to afford all people an equal opportunity to bid on any contract being let by the Town. The Town of Addison has a policy that prohibits discrimination against any person because of race, color, sex, or national origin, in the award or performance of any contract. The Town of Addison will require its employees, agents, and Contractors to adhere to this policy.

13. **ANTITRUST LAWS:** The Contractor hereby assigns to the Town of Addison any and all claims for overcharges associated with this contract which arise under the antitrust laws of the United States 15 U.S.C.A. Sec. 1, et seq. (1973).

14. **ABANDONMENT:** The Town of Addison reserves the right to abandon, without obligation to the Contractor, any part of the Project, or the entire Project, at any time before the Contractor begins any construction Work authorized by the Town of Addison. In case of total abandonment of the Project, the Contract becomes void. The Town of Addison may abandon portions of the Project at any time during the Project duration. In case of such partial abandonment, the Contractor shall not be due any payment for lost or unrealized profits on the abandoned portions of the Project.

15. **DISCREPANCIES:** If the Contractor, in the course of the Work, finds any discrepancy between the Contract Documents and the physical conditions of the Project, or any errors or omissions in Plans or in the layout as given by survey points and instructions, or if it appears that any Plan, Specification or other Contract Document is or may not be in compliance with any building code or other requirement of any governmental body, he shall immediately inform the Town of Addison and the Engineer in writing, and the Town of Addison and the Engineer shall promptly verify the same. Any Work done after such discovery, until authorized, will be done at the Contractor's risk.

16. **PREPARATION OF STORM WATER POLLUTION PREVENTION PLAN:** A Storm Water Pollution Prevention Plan (SW3P) will be required for this project, the area disturbed on this project during construction exceed 1 acre.

    This specification is not all inclusive of the requirements for an SW3P. The Contractor shall comply with all requirements of the TCEQ TPDES permit and the local authorities' storm water ordinance and/or regulations.

17. **ADDENDA:** Bidders desiring further information, or interpretation of the Plans and Specifications, must make written request for such information to the Engineer (not later than four (4) working days prior to the date set for the Bid opening. The ability to ask questions will close at **5:00 PM, Wednesday, October 13, 2021**. Answers to all such requests will be issued in the form of Addenda and a copy of such Addenda will be released through www.civcastusa.com. It will be the responsibility of each person who has been issued as set of Bidding Documents to secure all Addenda from www.civcastusa.com . Addenda will be bound with and made a part of the Contract Documents. No other explanation or interpretation will be considered official or binding. Should a Bidder find discrepancies in, or omissions from, the Plans, Specifications or Contract Documents, or should it be in doubt as to their meaning, it shall at once notify the Engineer in writing in order that a written addendum may be sent to all Bidders.

18. **PAY ITEMS:** Pay items provided are intended to be all-inclusive of the Work required on this Project. Work required by the Plans or Specifications but not provided with a specific pay item shall be considered incidental to other items of Work. Final payment to the construction Contractor shall not be made until all Work has been finally completed and verified in accordance with the construction contract, Plans and Specifications and have been finally accepted by the Town of Addison.

19. **QUANTITIES:** The quantities in the Bid Items are approximate and may represent quantities in excess of those actually installed. Final Payment will be based on the actual quantities installed and paid in accordance with the applicable Specifications.

## Bid Items descriptions

### Bid Item No. P1 - MOBILIZATION (5% MAX)

This item shall cover the lump sum cost for all charges for labor and for moving supplies, construction equipment and materials to the project site at the beginning of the project and for removing the same equipment and related supplies upon completion of the project, and for site cleanup. **See Special Provisions No. 25 for details for payment for this line Item.**

### Bid Item No. P2 - BARRICADES, SIGNS, AND TRAFFIC HANDLING

This item shall include the lump sum cost for installation, maintenance, relocation, and removal of all traffic signs (street name, directional, informational or regulatory), barricades, temporary signs, temporary pavement markings (except those identified in the permanent pavement marking bid items), traffic control plan and all other traffic control measures necessary to provide for the safe travel of vehicles and pedestrians through, along, or around the construction site and for the protection of the workers on the project. All barricades and warning signs will conform to those sections of the Texas Manual on Uniform Traffic Control Devices, latest edition, as amended by the Texas Department of Transportation. **See Special Provisions No. 50 and 51 for additional information.**

Partial payment of the Lump Sum bid shall be limited as follows:

1. When 5% of the *adjusted contract amount is earned, 25% of the Lump Sum bid shall be paid.

2. When 25% of the *adjusted contract amount is earned, 50% of the Lump Sum bid shall be paid. Previous payments under this item will be deducted from this amount.

3. When 50% of the *adjusted contract amount is earned, 75% of the Lump Sum bid shall be paid. Previous payments under this item will be deducted from this amount.

4. When all work under the contract is completed by the Contractor and accepted by the City, 100% of the Lump Sum bid shall be paid.

5. An overrun of the contract quantity will not be allowed under any circumstances unless the quantity is added by an approved change order.

Additional Notes - If the Contractor fails to provide properly maintain barricades, signs, and traffic control devices in compliance with the specifications, the Contractor will be considered in non-compliance with this item and payment may be delayed for this item.

**Bid Item No. P3 - PROJECT SIGN**

This item shall consist of the installation of a project sign in the locations approved by the OWNER. Each sign shall be constructed in accordance with the details found in Section PS of the Specification, details and notes, including NCTCOG Item 107.21.

Measurement and payment shall be made on the basis of price bid per each (EA) and shall be total compensation for furnishing all materials, tools, equipment, labor, and any other incidentals necessary to complete the work.

**Bid Item No. P4 - GENERAL SITE PREPARATION**

This work includes the preparing the jobsite within the project limits requiring such work, unless otherwise noted. This includes work within the right-of-way and any adjacent property that is necessary to complete the work as shown on the construction plans or as determined by the ENGINEER in accordance with the appropriate details and specifications, including NCTCOG Item 203.1. All vegetation within the paving limits shall be removed.

This work may also include, but not be limited to:

(a) The removal of existing pavement markings and traffic buttons;
(b) The removal or relocation of any existing barricades or signage;
(c) The removal of any existing driveway/roadway;
(d) The removal and relocation of any fencing and gates within the proposed right of way as specified within the construction plans;

(e) The removal of existing rock rip rap;
(f) The removal of a portion of the existing retaining wall at the locations shown in the construction plans;
(g) The removal of landscape edging;
(h) The removal of mailboxes;
(i) Any grading activities (excavation or fill) deemed necessary to prepare the proposed grades of the subgrade prior to pavement, unless separate bid items are provided for excavation or embankment;
(j) The removal and salvage of any existing regulatory, school or informational signs;
(k) The removal of all trees, stumps, bushes, vegetation, roots and shrubs not specified and are within the limits of work;
(l) Adjusting water vaults to finished grade as indicated on the plans;
(m) Protection and replacement of existing irrigation equipment.
(n) Dewatering of site for access.

These items of work will not be paid for directly but shall be considered subsidiary to this pay item. Any item indicated in the plans to be removed (directly called out or implied) for which there is no specific pay item shall be considered subsidiary to this pay item.

Measurement and payment for work performed and materials furnished related to general site and/or right of way preparation, as provided herein, shall be made on the basis of the price bid per lump sum (LS) and shall be total compensation for furnishing and/or operating all labor, materials, tools, equipment and other incidentals necessary to complete the work.

**Bid Item No. P5 - REMOVE EX HEADWALL**

This item shall consist of the removal and disposal of the existing headwall(s) at the locations shown in the drawings. Existing headwall shall be removed in accordance with appropriate specifications, details, and notes, including NCTCOG Item 701.2.

Measurement and payment shall be made on the basis of price bid per each (EA) and shall be total compensation for furnishing all materials, tools, equipment, labor, and any other incidentals necessary to complete the work.

**Bid Item No. P6 - REMOVAL OF EX 54" RCP**

This item shall consist of the removal and disposal of existing 54" reinforced concrete pipe at the locations shown in the drawings. Existing 54" reinforced concrete pipe shall be removed in accordance with appropriate specifications, details, and notes, including NCTCOG Item 701.2.

Measurement and payment shall be made on the basis of price bid per linear feet (LF) and shall be total compensation for furnishing all materials, tools, equipment, labor, and any other incidentals necessary to complete the work.

**Bid Item No. P7 - REMOVE EXISTING CONCRETE SIDEWALK/RAMPS**

This item shall consist of the removal and disposal of existing concrete sidewalks and curb ramps at the locations shown in the drawings. Existing concrete sidewalks and curb ramps shall be removed in accordance with appropriate specifications, details, and notes, including NCTCOG Item 701.2.

Measurement and payment shall be made on the basis of price bid per square yard (SY) and shall be total compensation for furnishing all materials, tools, equipment, labor, and any other incidentals necessary to complete the work.

**Bid Item No. P8 - REMOVE EXISTING ASPHALT PAVEMENT**

This item shall consist of the removal and disposal of asphalt pavement at the locations shown in the drawings. Existing asphalt pavement shall be removed in accordance with appropriate specifications, details, and notes, including NCTCOG Item 701.2.

Measurement and payment shall be made on the basis of price bid per square yard (SY) and shall be total compensation for furnishing all materials, tools, equipment, labor, and any other incidentals necessary to complete the work.

**Bid Item No. P9 - REMOVE EXISTING TREES**

This item shall consist of the removal and disposal of existing trees at the locations shown in the drawings. Existing trees shall be removed in accordance with appropriate specifications, details, and notes, including NCTCOG Item 204.1

Measurement and payment shall be made on the basis of price bid per each (EA) and shall be total compensation for furnishing all materials, tools, equipment, labor, and any other incidentals necessary to complete the work.

**Bid Item No. P10 - UNCLASSIFIED STREET EXCAVATION**

This work consists of all the required excavation within the limits of the right-of-way and adjacent areas to establish the roadway cross-section, grade, drainage ditches and profile as shown on the plans. All excavation is considered unclassified and shall be performed to the lines & grades shown on the construction plans or as directed by the ENGINEER, in accordance with the appropriate specifications, details and notes, including NCTCOG Item 203.2, 203.4 & 203.5.

This item also includes temporary stockpiling, placement, and compaction of excavated or borrow material required for this project, in accordance with the appropriate specifications. Fill shall be placed and compacted (minimum 95% of maximum dry density) in accordance with the specifications, details, notes, and geotechnical report.

This is a "Plans Quantity" item and will not be measured unless there are revisions to the scope of work. Payment for work performed and materials furnished related to the unclassified excavation and embankment, as provided herein, shall be made on the basis of the price bid per lump sum (LS) for unclassified excavation and shall be total compensation for furnishing and/or

operating all labor, materials, tools, equipment and other incidentals necessary to complete the work.

**Bid Item No. P11 - BORROW AND SPOIL (ROADWAY)**

This work consists of all the require fill within the limits of the right-of-way and adjacent areas to establish the roadway cross-section, grade, drainage ditches and profile as shown on the plans. All fill is considered unclassified and shall be performed to the lines & grades shown on the construction plans or as directed by the ENGINEER, in accordance with the appropriate specifications, details and notes, including NCTCOG Item 203.2, 203.4 & 203.5.

This item also includes temporary stockpiling, placement, and compaction of excavated or borrow material required for this project, in accordance with the appropriate specifications. Fill shall be placed and compacted (minimum 95% of maximum dry density) in accordance with the specifications, details, notes, and geotechnical report.

This is a "Plans Quantity" item and will not be measured unless there are revisions to the scope of work. Payment for work performed and materials furnished related to the unclassified fill, as provided herein, shall be made on the basis of the price bid per lump sum (LS) for unclassified fill and shall be total compensation for furnishing and/or operating all labor, materials, tools, equipment and other incidentals necessary to complete the work.

**Bid Item No. P12 - MOISTURE TREATED SUBGRADE**

This item shall consist of the moisture treatment of the roadway subgrade to the limits shown and locations shown in the drawings. The subgrade shall be treated in accordance with project specification, notes, and geotechnical report.

Measurement and payment shall be made on the basis of price bid per square yard (SY) and shall be total compensation for furnishing all materials, tools, equipment, labor, and any other incidentals necessary to complete the work.

**Bid Item No. P13 - 6" LIME STABILIZED SUBGRADE**

This item shall consist of lime stabilization of the roadway subgrade to the limits shown and locations shown in the drawings. The subgrade shall be stabilized in accordance with project specification, geotechnical report, and notes, including NCTCOG Item 301.2.

Measurement and payment shall be made on the basis of price bid per square yard (SY) and shall be total compensation for furnishing all materials, tools, equipment, labor, and any other incidentals necessary to complete the work.

**Bid Item No. P14 - HYDRATED LIME**

This item shall consist of furnishing hydrate lime for the stabilization of the roadway subgrade to the limits shown and locations shown in the drawings. Hydrated lime shall be in accordance with project specification, geotechnical report, and notes, including NCTCOG Item 301.2.

Measurement and payment shall be made on the basis of price bid per ton (TON) and shall be total compensation for furnishing all materials, tools, equipment, labor, and any other incidentals necessary to complete the work.

**Bid Item No. P15 - 4" TYP B HMAC (TXDOT)**

This item shall consist of installation of type B hot mix asphalt concrete at the locations shown in the drawings. Hot mix asphalt concrete shall be installed accordance with project specification, details, and notes, including TxDOT Item 340.

Measurement and payment shall be made on the basis of price bid per ton (TON) and shall be total compensation for furnishing all materials, seal coat, tack coat, tools, equipment, labor, and any other incidentals necessary to complete the work.

**Bid Item No. P16 - 8" REINFORCED CONCRETE PAVEMENT (STREET)**

This item shall consist of installation of reinforced concrete pavement at the locations shown in the drawings. Concrete pavement shall be installed in accordance with project specification, details, and notes, including NCTCOG Item 303.

Measurement and payment shall be made on the basis of price bid per square yard (SY) and shall be total compensation for furnishing all materials, tools, equipment, labor, and any other incidentals necessary to complete the work.

**Bid Item No. P17 - 10" PORTLAND CEMENT CONC PAVEMENT W/ 6" MONO CURB**

This item shall consist of installation of reinforced concrete pavement with 6" mono curb at the locations shown in the drawings. Concrete pavement shall be installed in accordance with project specification, details, and notes, including NCTCOG Item 303.

Measurement and payment shall be made on the basis of price bid per square yard (SY) and shall be total compensation for furnishing all materials, tools, equipment, labor, and any other incidentals necessary to complete the work.

**Bid Item No. P18 - 6" CURB AND GUTTER**

This item shall consist of installation of 6" curb and gutter at the locations shown in the drawings. Concrete curb and gutter shall be installed in accordance with project specification, details, and notes, including NCTCOG Item 305.1.

Measurement and payment shall be made on the basis of price bid per linear feet (LF) and shall be total compensation for furnishing all materials, tools, equipment, labor, and any other incidentals necessary to complete the work.

**Bid Item No. P19 - REINFORCED CONCRETE STREET HEADERS**

This item shall consist of installation of concrete street headers at the locations shown in the drawings. Concrete street headers and gutter shall be installed in accordance with project specification, details, and notes, including NCTCOG Item 305.4.

Measurement and payment shall be made on the basis of price bid per linear feet (LF) and shall be total compensation for furnishing all materials, tools, equipment, labor, and any other incidentals necessary to complete the work.

**Bid Item No. P20 - 5" CONCRETE SIDEWALK**

This item shall consist of installation of 5" concrete sidewalks at the locations shown in the drawings. Concrete sidewalk shall be installed in accordance with project specification, details, and notes, including NCTCOG Item 305.2.

Measurement and payment shall be made on the basis of price bid per square yard (SY) and shall be total compensation for furnishing all materials, tools, equipment, labor, and any other incidentals necessary to complete the work.

**Bid Item No. P21 – ACCESSIBLE RAMPS**

This item shall consist of installation of curb ramps of the type shown at the locations shown in the drawings. Curb ramps shall be installed in accordance with project specification, details, and notes, including TxDOT Item 531.

Measurement and payment shall be made on the basis of price bid per each (EA) and shall be total compensation for furnishing all materials, tools, equipment, labor, and any other incidentals necessary to complete the work.

**Bid Item No. P22 - RAIL (HANDRAIL) (TY F)**

This item shall consist of installation of handrail of the type shown at the locations shown in the drawings. Handrail shall be installed in accordance with project specification, details, and notes, including TxDOT Item 450.

Measurement and payment shall be made on the basis of price bid per linear feet (LF) and shall be total compensation for furnishing all materials, tools, equipment, labor, and any other incidentals necessary to complete the work.

**Bid Item No. P23 - INSTALL NEW SIGN AND SIGN POST ASSEMBLY**

This item shall consist of installation of new road signs, signposts and assemblies at the locations shown in the drawings. Signs, posts, and assemblies shall be installed in accordance with project specification, details, and notes, including TxDOT Item 644.

Measurement and payment shall be made on the basis of price bid per each (EA) and shall be total compensation for furnishing all materials, tools, equipment, labor, and any other incidentals necessary to complete the work.

**Bid Item No. P24 - REFL PAV MRKG TY I & TY II (W) 4" SOLID**
**Bid Item No. P25 - REFL PAV MRKG TY I & TY II (Y) 4" SOLID**
**Bid Item No. P26 - REFL PAV MRKG TY I & TY II (Y) 4" BROKEN**
**Bid Item No. P28 - REFL PAV MRKG TY I & TY II (W) 24" STOP BAR MARKING**

This item shall consist of installation of reflective pavement markings of the type shown at the locations shown in the drawings. Reflective pavement markings shall be installed in accordance with project specification, details, and notes, including TxDOT Item 666.

Measurement and payment shall be made on the basis of price bid per linear feet (LF) and shall be total compensation for furnishing all materials, tools, equipment, labor, and any other incidentals necessary to complete the work.

**Bid Item No. P27 - REFL PAV MRKG TY I & TY II (W) ARROW**
**Bid Item No. P29 - REFL PAV MRKG TY I & TY II (W) 5' X 8' CROSSWALK WITH 5' SPACE**
**Bid Item No. P30 - REFL PAV MRKG TY I & TY II (W) 24"X 8" CROSSWALK WITH 4' SPACE**
**Bid Item No. P31 - REFL PAV MRKG TY I (W) 24" TRIANGLE**

This item shall consist of installation of reflective pavement markings of the type shown at the locations shown in the drawings. Reflective pavement markings shall be installed in accordance with project specification, details, and notes, including TxDOT Item 666.

Measurement and payment shall be made on the basis of price bid per each (EA) and shall be total compensation for furnishing all materials, tools, equipment, labor, and any other incidentals necessary to complete the work.

**Bid Item No. P32 - REMOVE AND RELOCATE EX GATE**

This item shall consist of removing and relocating existing swing gate at the locations shown in the drawings. Existing gate shall be removed and relocated in accordance with project specification, details, and notes.

Removal and relocation of existing post bollards, gate, gate posts, and gate spots shall be considered subsidiary to this item.

Measurement and payment shall be made on the basis of price bid per each (EA) and shall be total compensation for furnishing all materials, tools, equipment, labor, and any other incidentals necessary to complete the work.

**Bid Item No. P33 - ONCOR DUCT CROSSING COORDINATION**

This item shall consist of the labor, equipment, and materials required for active coordination with Oncor during crossing of duct banks to be installed by others.

This work required for this item may include, but is not limited to:

- Active communication with Oncor of work progress
- Adequate notifications to Oncor of work adjacent to Oncor facilities
- Movement of equipment that may impede Oncor operations
- Protection of in-place work that could be damaged by others
- Constructing leave out of concrete pavement and sidewalk for Oncor to perform duct bank operations

Measurement and payment shall be made on the basis of price bid per lump sum (LS) and shall be total compensation for furnishing all materials, tools, equipment, labor, and any other incidentals necessary to complete the work. Coordination with Oncor and/or other utility companies related to other facilities shall be considered subsidiary to the cost of the project.

**Bid Item No. B1 - FLOWABLE BACKFILL**

This item shall consist of installation flowable backfill at the locations shown in the drawings. Flowable backfill shall be installed in accordance with project specification, details, and notes, including TxDOT Item 401.

Measurement and payment shall be made on the basis of price bid per cubic yard (CY) and shall be total compensation for furnishing all materials, tools, equipment, labor, and any other incidentals necessary to complete the work.

**Bid Item No. B2 - DRILL SHAFT (18 IN)**
**Bid Item No. B3 - DRILL SHAFT (36 IN)**

This item shall consist of construction of drilled shafts of the different sizes at the locations shown in the drawings. Drilled shaft shall be installed in accordance with project specification, details, and notes, including TxDOT Item 416.

Measurement and payment shall be made on the basis of price bid per linear feet (LF) and shall be total compensation for furnishing all materials, tools, equipment, labor, and any other incidentals necessary to complete the work.

**Bid Item No. B4 - CL C CONC (ABUT) (HPC)**

This item shall consist of construction of bridge abutment cap, wingwalls, and backwall at the locations shown in the drawings. Concrete abutment cap, wingwalls, and backwall shall be constructed in accordance with project specification, details, and notes, including TxDOT Item 420.

Measurement and payment shall be made on the basis of price bid per cubic yard (CY) and shall be total compensation for furnishing all materials, tools, equipment, labor, and any other incidentals necessary to complete the work.

**Bid Item No. B5 - REINF CONC SLAB (HPC)**

This item shall consist of construction of bridge reinforced concrete slab at the locations shown in the drawings. Reinforced bridge deck shall be constructed in accordance with project specification, details, and notes, including TxDOT Item 422.

Measurement and payment shall be made on the basis of price bid per square feet (SF) and shall be total compensation for furnishing all materials, tools, equipment, labor, and any other incidentals necessary to complete the work.

**Bid Item No. B6 – BRIDGE SIDEWALK (HPC)**

This item shall consist of construction of bridge sidewalk at the locations shown in the drawings. Bridge sidewalk shall be constructed in accordance with project specification, details, and notes, including TxDOT Item 422.

Measurement and payment shall be made on the basis of price bid per square feet (SF) and shall be total compensation for furnishing all materials, tools, equipment, labor, and any other incidentals necessary to complete the work.

**Bid Item No. B7 - APPROACH SLAB (HPC)**

This item shall consist of construction of bridge approach slab at the locations shown in the drawings. Approach slab shall be constructed in accordance with project specification, details, and notes, including TxDOT Item 422.

Measurement and payment shall be made on the basis of price bid per cubic yard (CY) and shall be total compensation for furnishing all materials, tools, equipment, labor, and any other incidentals necessary to complete the work.

**Bid Item No. B8 - PRESTR CONC I-GIRDER (TX40)**

This item shall consist of installation of prestressed concrete girders at the locations shown in the drawings. Prestressed concrete girders shall be constructed in accordance with project specification, details, and notes, including TxDOT Item 425.

Measurement and payment shall be made on the basis of price bid per linear feet (LF) and shall be total compensation for furnishing all materials, tools, equipment, labor, and any other incidentals necessary to complete the work.

**Bid Item No. B9 - RIPRAP (CONC) (CL B) (RR8&RR9)**

This item shall consist of installation of concrete riprap at the locations adjacent to the bridge as shown in the drawings. Concrete riprap shall be installed in accordance with project specification, details, and notes, including TxDOT Item 432.

Measurement and payment shall be made on the basis of price bid per cubic yard (CY) and shall be total compensation for furnishing all materials, tools, equipment, labor, and any other incidentals necessary to complete the work.

**Bid Item No. B10 - RIPRAP (STONE PROTECTION) (24 IN)**

This item shall consist of installation stone riprap at the locations adjacent to the bridge as shown in the drawings. Stone riprap shall be installed in accordance with project specification, details, and notes, including TxDOT Item 432.

Measurement and payment shall be made on the basis of price bid per cubic yard (CY) and shall be total compensation for furnishing all materials, tools, equipment, labor, and any other incidentals necessary to complete the work.

**Bid Item No. B11 - ELASTOMERIC BEARING (LAMINATED)**

This item shall consist of installation of elastomeric bearing pads at the locations shown in the drawings. Elastomeric bearing pads shall be installed in accordance with project specification, details, and notes, including TxDOT Item 434.

Measurement and payment shall be made on the basis of price bid per each (EA) and shall be total compensation for furnishing all materials, tools, equipment, labor, and any other incidentals necessary to complete the work.

**Bid Item No. B12 - STR STEEL (MISCELLANEOUS BRIDGE) (BS-EJCP)**

This item shall consist of installation of structural steel plate at the locations shown in the drawings. Structural steel shall be installed in accordance with project specification, details, and notes, including TxDOT Item 442.

Measurement and payment shall be made on the basis of price bid per pound (LB) and shall be total compensation for furnishing all materials, tools, equipment, labor, and any other incidentals necessary to complete the work.

**Bid Item No. B13 - RAIL (TY C221) (HPC)**

This item shall consist of construction of combination rail of the type shown at the locations shown in the drawings. Combination rail shall be constructed in accordance with project specification, details, and notes, including TxDOT Item 450.

Measurement and payment shall be made on the basis of price bid per linear feet (LF) and shall be total compensation for furnishing all materials, tools, equipment, labor, and any other incidentals necessary to complete the work.

**Bid Item No. B14 - SEALED EXPANSION JOINT (4 IN) (SEJ - M)**

This item shall consist of installation of sealed expansion joint of the type shown at the locations shown in the drawings. Sealed expansion joint shall be installed in accordance with project specification, details, and notes, including TxDOT Item 454.

Measurement and payment shall be made on the basis of price bid per linear feet (LF) and shall be total compensation for furnishing all materials, tools, equipment, labor, and any other incidentals necessary to complete the work.

**Bid Item No. B15 - MTL BEAM GD FEN TRANS (THRIE-BEAM)**

This item shall consist of installation of metal beam guard fence transition of the type shown at the locations shown in the drawings. Metal beam guard fence transition shall be installed in accordance with project specification, details, and notes, including TxDOT Item 540.

Measurement and payment shall be made on the basis of price bid per each (EA) and shall be total compensation for furnishing all materials, tools, equipment, labor, and any other incidentals necessary to complete the work.

**Bid Item No. B16 - TERMINAL ANCHOR SECTION**

This item shall consist of installation of metal beam guard fence terminal anchor section of the type shown at the locations shown in the drawings. Metal beam guard fence terminal anchor section shall be installed in accordance with project specification, details, and notes, including TxDOT Item 540.

Measurement and payment shall be made on the basis of price bid per each (EA) and shall be total compensation for furnishing all materials, tools, equipment, labor, and any other incidentals necessary to complete the work.

**Bid Item No. D1 - 18" RCP CLASS III**
**Bid Item No. D2 - 24" RCP CLASS III**
**Bid Item No. D3 - 30" RCP CLASS III**

This item shall consist of installation of reinforced concrete pipe of the type and size shown at the locations shown in the drawings. Reinforced concrete pipe shall be installed in accordance with project specification, details, and notes, including TxDOT Item 464.

TV inspection of reinforced concrete pipe shall be considered subsidiary to this item.

Measurement and payment shall be made on the basis of price bid per linear feet (LF) and shall be total compensation for furnishing all materials, tools, equipment, labor, and any other incidentals necessary to complete the work.

**Bid Item No. D4 - 6' CURB INLET**

This item shall consist of construction of curb inlets of the size shown at the locations shown in the drawings. Curb inlets shall be constructed in accordance with project specification, details, and notes, including NCTCOG 702.1.

Measurement and payment shall be made on the basis of price bid per each (EA) and shall be total compensation for furnishing all materials, tools, equipment, labor, and any other incidentals necessary to complete the work.

**Bid Item No. D5 - CONCRETE HEADWALL (CHFW-0)**

This item shall consist of installation of concrete headwall of the type shown at the locations shown in the drawings. Concrete headwall shall be constructed in accordance with project specification, details, and notes, including TxDOT Item 466.

Measurement and payment shall be made on the basis of price bid per each (EA) and shall be total compensation for furnishing all materials, tools, equipment, labor, and any other incidentals necessary to complete the work.

**Bid Item No. D6 - 18" RCP 2:1 SET TY II HEADWALL**

This item shall consist of installation of safety end treatment of the type shown at the locations shown in the drawings. Safety end treatment shall be constructed in accordance with project specification, details, and notes, including TxDOT Item 467.

Measurement and payment shall be made on the basis of price bid per each (EA) and shall be total compensation for furnishing all materials, tools, equipment, labor, and any other incidentals necessary to complete the work.

**Bid Item No. D7 - 18" RCP 6:1 SET TY II HEADWALL**

This item shall consist of installation of safety end treatment of the type shown at the locations shown in the drawings. Safety end treatment shall be constructed in accordance with project specification, details, and notes, including TxDOT Item 467.

Measurement and payment shall be made on the basis of price bid per each (EA) and shall be total compensation for furnishing all materials, tools, equipment, labor, and any other incidentals necessary to complete the work.

**Bid Item No. D8 - 24" RCP 6:1 SET TY II HEADWALL**

This item shall consist of installation of safety end treatment of the type shown at the locations shown in the drawings. Safety end treatment shall be constructed in accordance with project specification, details, and notes, including TxDOT Item 467.

Measurement and payment shall be made on the basis of price bid per each (EA) and shall be total compensation for furnishing all materials, tools, equipment, labor, and any other incidentals necessary to complete the work.

**Bid Item No. D9 – RIPRAP (STONE PROTECTION) (12 IN) (CHFW-0 HEADWALL)**

This item shall consist of installation stone riprap at the locations adjacent to CHFW-0 headwall as shown in the drawings. Stone riprap shall be installed in accordance with project specification, details, and notes, including TxDOT Item 432.

Measurement and payment shall be made on the basis of price bid per cubic yard (CY) and shall be total compensation for furnishing all materials, tools, equipment, labor, and any other incidentals necessary to complete the work.

**Bid Item No. D10 - TRENCH EXCAVATION PROTECTION (STORM SYSTEM)**

This work includes preparing a job specific trench safety plan and installing the proper shoring and/or bracing to adequately provide a safe trench for all storm sewer improvements, in compliance with current regulations and requirements of the United States Department of Labor Occupational Safety and Health Administration (OSHA). The CONTRACTOR shall have a Trench Safety Plan prepared, signed, and sealed by a professional engineer and provided to the ENGINEER prior to the start of construction. The preparation of the trench safety plan, as required by these specifications, will not be paid for directly but shall be considered subsidiary to this pay item.

Measurement and payment for work performed and materials furnished related to the preparation of a trench safety plan and the installation of a trench safety systems, as provided herein, shall be made on the basis of the price bid per linear foot (LF) of trench exceeding a depth of 4-ft and shall be total compensation for furnishing and/or operating all labor, materials, tools, equipment and other incidentals necessary to complete the work.

**Bid Item No. H1 - UNCLASSIFIED POND AND CREEK EXCAVATION**

This work consists of all the required excavation within the limits of the right-of-way and adjacent areas to grade detention pond and creek as shown on the plans. All excavation is considered unclassified and shall be performed to the lines & grades shown on the construction plans or as directed by the ENGINEER, in accordance with the appropriate specifications, details and notes, including NCTCOG Item 203.2, 203.4 & 203.5.

This item also includes temporary stockpiling, placement, and compaction of excavated or borrow material required for this project, in accordance with the appropriate specifications. Fill shall be placed and compacted (minimum 95% of maximum dry density) in accordance with the specifications, details, notes, and geotechnical report.

This is a "Plans Quantity" item and will not be measured unless there are revisions to the scope of work. Payment for work performed and materials furnished related to the unclassified excavation and embankment, as provided herein, shall be made on the basis of the price bid per lump sum (LS) for unclassified excavation and shall be total compensation for furnishing and/or operating all labor, materials, tools, equipment and other incidentals necessary to complete the work.

**Bid Item No. H2 - BORROW AND SPOIL (DETENTION POND AND CREEK)**

This work consists of all the require fill within the limits of the right-of-way and adjacent areas to grade the detention pond and creek grading as shown on the plans. All fill is considered unclassified and shall be performed to the lines & grades shown on the construction plans or as directed by the ENGINEER, in accordance with the appropriate specifications, details and notes, including NCTCOG Item 203.2, 203.4 & 203.5.

This item also includes temporary stockpiling, placement, and compaction of excavated or borrow material required for this project, in accordance with the appropriate specifications. Fill shall be placed and compacted (minimum 94% of maximum dry density) in accordance with the specifications, details, notes, and geotechnical report.

This is a "Plans Quantity" item and will not be measured unless there are revisions to the scope of work. Payment for work performed and materials furnished related to the unclassified fill, as provided herein, shall be made on the basis of the price bid per lump sum (LS) for unclassified fill and shall be total compensation for furnishing and/or operating all labor, materials, tools, equipment and other incidentals necessary to complete the work.

**Bid Item No. H3 - BORROW AND SPOIL (DETENTION POND AND CREEK) (SELECT FILL)**

This work consists of all the require select fill within the limits of the right-of-way and adjacent areas to grade bridge and creek grading as shown on the plans. The select fill shall be performed to the lines & grades shown on the construction plans or as directed by the ENGINEER, in accordance with the appropriate specifications, details and notes, including NCTCOG Item 203.2, 203.4 & 203.5.

This item also includes temporary stockpiling, placement, and compaction of excavated or borrow material required for this project, in accordance with the appropriate specifications. Fill shall be placed and compacted in accordance with the specifications, details, notes, and geotechnical report.

This is a "Plans Quantity" item and will not be measured unless there are revisions to the scope of work. Payment for work performed and materials furnished related to the select fill, as provided herein, shall be made on the basis of the price bid per lump sum (LS) for select fill and shall be total compensation for furnishing and/or operating all labor, materials, tools, equipment and other incidentals necessary to complete the work.

**Bid Item No. H4 - RIPRAP (CONC) (CL B) (RR8&RR9) (DETENTION POND)**

This item shall consist of installation of concrete riprap at the locations adjacent to the detention pond and outfall as shown in the drawings. Concrete riprap shall be installed in accordance with project specification, details, and notes, including TxDOT Item 432.

Measurement and payment shall be made on the basis of price bid per cubic yard (CY) and shall be total compensation for furnishing all materials, tools, equipment, labor, and any other incidentals necessary to complete the work.

**Bid Item No. H5 - RIPRAP (STONE PROTECTION) (24 IN) (DETENTION POND)**

This item shall consist of installation stone riprap at the locations adjacent to the detention pond and outfall as shown in the drawings. Stone riprap shall be installed in accordance with project specification, details, and notes, including TxDOT Item 432.

Measurement and payment shall be made on the basis of price bid per cubic yard (CY) and shall be total compensation for furnishing all materials, tools, equipment, labor, and any other incidentals necessary to complete the work.

**Bid Item No. H6 - CONCRETE OUTFALL STUCTURE**

This item shall consist of construction of concrete outfall structure at the detention pond as shown in the drawings. The outfall structure shall be constructed in accordance with project specification, details, and notes, including TxDOT Item 420.

Measurement and payment shall be made on the basis of price bid per cubic yard (CY) and shall be total compensation for furnishing all materials, grates, tools, equipment, labor, and any other incidentals necessary to complete the work.

**Bid Item No. L1 - HYDRAULIC MULCHING WITH 4" TOPSOIL**

This item includes all work, materials and incidentals necessary to restore parkways, yards or other areas that are disturbed to an equal or better condition than prior to construction, in accordance with the appropriate details and specifications, including NCTCOG Item 204. Disturbed areas along the length of the project shall be fine graded and cut to receive hydraulic mulching. A minimum of 4" of topsoil shall be placed to bring the site to grade.

Unless directed otherwise by the engineer, hydraulic mulching shall match the species (minimum of Bermuda sod) that existed prior to construction and/or the species adjacent to the disturbed

area shall be placed in all disturbed areas where improved lawn or established turf existed prior to construction. The contractor will be required to water, fertilize, mow and otherwise maintain restored areas to establish healthy growth, even distribution of vegetation and full coverage over the entire restored area. The contractor shall also maintain and protect these areas from damage and repair any damage that occurs, until completion and final acceptance of the project by the OWNER.

Measurement and payment for parkway and disturbed area restoration work performed and materials furnished complete and in place as provided herein shall be made on the basis of the price bid per square yard (SY) and shall be total compensation for furnishing and/or operating all labor, materials, tools, equipment and other incidentals necessary to complete the work, including watering, fertilizing, mowing and maintenance of the restored areas. Payment shall be made based on the quantity shown in the bid proposal, regardless if the amount installed in order to hydraulic mulching all disturbed areas exceeds the bid quantity. No more than 75% of this item will be paid until 100% turf coverage has been established in all areas disturbed, to the satisfaction of the OWNER.

**Bid Item No. L2 - SEDIMENT CONTROL FENCE (INSTALL/MAINTAIN/REMOVE)**

This item shall consist of installation, maintenance, and removal of sediment control fence at the locations shown in the drawings. Sediment control fence shall be constructed in accordance with project specification, details, and notes, including NCTCOG Item 202.5.

Measurement and payment shall be made on the basis of price bid per linear feet (LF) and shall be total compensation for furnishing all materials, tools, equipment, labor, and any other incidentals necessary to complete the work.

**Bid Item No. L3 - STABILIZED CONSTRUCTION EXIT/ENTRANCE**

This item shall consist of installation, maintenance, and removal of stabilized construction exit/entrance at the locations shown in the drawings. Construction exits/entrances shall be constructed in accordance with project specification, details, and notes, including NCTCOG Item 202.11.

Measurement and payment shall be made on the basis of price bid per square yard (SY) and shall be total compensation for furnishing all materials, tools, equipment, labor, and any other incidentals necessary to complete the work.

**Bid Item No. L4 - INLET PROTECTION (INSTALL/MAINTAIN/REMOVE)**

This item shall consist of installation, maintenance, and removal of inlet protection at the locations shown in the drawings. Inlet protection shall be constructed in accordance with project specification, details, and notes, including NCTCOG Item 202.14.

Measurement and payment shall be made on the basis of price bid per each (EA) and shall be total compensation for furnishing all materials, tools, equipment, labor, and any other incidentals necessary to complete the work.

**Bid Item No. L5 – ROCK CHECK DAM**

This item shall consist of installation, maintenance, and removal of rock check dam at the locations shown in the drawings. Rock check dam shall be constructed in accordance with project specification, details, and notes, including NCTCOG Item 202.9.

Measurement and payment shall be made on the basis of price bid per linear feet (LF) and shall be total compensation for furnishing all materials, tools, equipment, labor, and any other incidentals necessary to complete the work.

**Bid Item No. L6 - STORM WATER POLLUTION PREVENTION PLAN**

This pay item shall consist of furnishing, installing, maintaining and removing erosion controls throughout the duration of the project in accordance with the Texas Commission on Environmental Quality's (TCEQ) permitting procedures and requirements for construction projects that disturb five (5) or more acres. Under the Texas Pollution Discharge Elimination System (TPDES) general construction permit TXR 150000, the operator with control of construction plans and specifications (OWNER) and the operator with day-to-day operational control (CONTRACTOR) are required to obtain a permit for the discharge of storm water runoff. The CONTRACTOR shall be required to prepare and implement a single comprehensive site-specific Storm Water Pollution Prevention Plan (SWP3) for the entire construction site. The CONTRACTOR shall: (1) sign the SWP3, (2) submit an NOI for the Town of Addison & CONTRACTOR if required, and (3) post a site notice as part of the permit. The SWP3 must describe and ensure the implementation of best management practices that will be used to reduce, to the maximum extent possible, the pollutants and storm water discharges associated with the construction activity and ensure compliance with the terms and conditions of the permit. The SWP3 must clearly indicate which operator is responsible for satisfying each shared requirement of the SWP3. The SWP3 shall be subject to approval by the OWNER and must be retained on-site during the term of the construction. Notice must be posted if the SWP3 is retained off-site.

A Texas Registered Professional Engineer must sign and seal the Erosion Control Plan (ECP) submitted as part of the SWP3. The CONTRACTOR shall submit a Notice of Termination for Town of Addison and CONTRACTOR upon completion of the project if required.

This work shall also include the installation and maintenance of, unless specified otherwise:

- Silt fence;
- Rock check dam;
- Stabilized construction entrance;
- Staged inlet protection;
- Any additional erosion control measures required by the SWP3.

Measurement and payment shall be made on the basis of the price bid per lump sum (LS) for preparation and implementation of the SWP3. This includes any necessary revisions to the Erosion Control Plan throughout the term of construction and the installation, sequencing, and maintenance of structural control measures throughout the duration of construction and along its entire stretch. Payment shall be total compensation for furnishing all labor, materials, tools, and equipment necessary to complete the work. Payment shall be evenly prorated throughout the term of construction on a monthly basis, based on amount bid and time bid.

**Bid Item No. W1 - 8" PVC WATER LINE**
**Bid Item No. W2 - 12" PVC WATER LINE**

This work includes the furnishing and installation of 8", and 12" diameter PVC meeting the requirements of AWWA C900, at the locations shown in the plans as per NCTCOG items 501.14, 502, 503, 504, and 506 and the Town of Addison Standard Construction Details. Proposed water line shall comply with AWWA C900. Payment shall include furnishing, hauling and laying of pipe shown on the plans, trench excavation, and backfilling, including embedment material as specified, replacement of topsoil, protecting or replacing existing structures or utilities, testing, disposal of surplus materials, and cleaning up and maintenance. Payment shall include any and all extra precautions or construction requirements necessary to adequately protect and support existing utilities. Payment for the pipelines shall include all costs required to have utility companies repair any damage inflicted to their lines by the CONTRACTOR and any cleanup, property damages, fines, etc. resulting from damage inflicted to any utility line by the CONTRACTOR.

Embedment for water lines shall be per Town of Addison standard construction details.

All fittings associated with the proposed water line installation, as indicated in the plans, shall be considered incidental to this pay item.

This work shall also include the construction of temporary pavement repair necessary for traffic control and detours or as determined by the ENGINEER. Temporary pavement repair shall be constructed and maintained in water line installation areas as indicated in the construction plans that will be open to traffic prior to the construction of the final pavement. Temporary pavement repair, as required by these specifications, will not be paid for directly but shall be considered subsidiary to this pay item.

Measurement and payment shall be made on the basis of price bid per linear foot (LF) measured horizontally and shall be total compensation for furnishing all materials, tools, equipment, labor, and any other incidentals necessary to complete the work, including all excavation, embedment and backfill.

**Bid Item No. W3 - 8 " GATE VALVE**
**Bid Item No. W4 - 12 " GATE VALVE**

This work includes the furnishing and installation of 8", and 12" gate valves as shown on the plans or as determined by the ENGINEER, in accordance with NCTCOG Item 502.6 and the Town of Addison Standard Construction Details and Specifications. These pay items shall be inclusive of all items necessary to complete the installation.

Measurement and payment shall be made on the basis of the price per bid each (EA) and shall be total compensation for furnishing all materials, tools, equipment, labor, and any other incidentals necessary to complete the work, including curb identification markings, valve boxes, all excavation, embedment and backfill necessary to complete the work.

**Bid Item No. W5 - FIRE HYDRANT ASSEMBLY**

This pay item shall consist of the installation of new fire hydrant assemblies including connections and testing of the fire hydrants at locations indicated on the plans and in accordance with NCTCOG Item 502.3 and Town of Addison Construction Details and Specifications. The 6" PVC water line lead from water main to gate valve and the 6" gate valve required for fire hydrant installation are considered subsidiary to this item and shall not be paid for separately.

Fire hydrant assemblies shall be inclusive of all work necessary to install and connect the new fire hydrant to the water line. This includes all fittings, megalugs, water pipe from fire hydrant gate valve and water pipe for stack, blocking, etc. necessary to complete the construction.

Measurement and payment for work performed and materials furnished related to installing the fire hydrant and valve assembly, as provided herein, shall be made on the basis of the price bid per each (EA) and shall be total compensation for furnishing and/or operating all labor, materials, tools, equipment and other incidentals necessary to complete the work, including curb identification markings and any barrel extensions required.

**Bid Item No. W6 - REMOVE EXISTING 12" AC WATER LINE**

This work includes the removal and disposal of the existing 12" Asbestos Concrete Pipe water line at the locations shown in the drawings. The removal of the existing Asbestos Concrete Pipe shall be completed in accordance with NCTCOG Item 604.

Measurement and payment shall be made on the basis of the price per bid linear feet (LF) and shall be total compensation for furnishing all materials, tools, equipment, labor, and any other incidentals necessary to complete the work.

**Bid Item No. W7 - ABANDON EXISTING ASBESTOS PIPE IN PLACE**

The work includes the grouting of existing various diameter water lines for the purpose of abandonment as indicated on the construction plans or a s determined by the ENGINEER, in accordance with TxDOT Special Specification 7076, "Grouting of Water Mains" and NCTCOG Item 604. The CONTRACTOR shall verify that all services, meters, stub-outs, and other branch

water lines supplied from the existing water lines to be abandoned are transferred to other water lines as shown on the construction plans prior to pavement construction.

The existing water lines shall be abandoned as follows:

After each section of the existing water line is taken out of service, the abandoned section shall be completely drained, including pumping water from the system, as necessary.
Place grout/flowable fill using concrete or grout pumps capable of continuous delivery.
Any and all openings into the existing pipe will be closed by use of approved M.J. cast irons caps or plugs and blocking according to the plans, specifications and/or details governing such work.
Existing valves may be used to close the existing system, the pipe on the abandoned side shall not be left open, but shall be plugged and blocked.

Valves stacks shall be removed and backfilled with soil.

All grout/flowable fill shall conform to TxDOT Item 401, "Flowable Backfill" and TxDOT Special Specification 7076, "Grouting of Water Mains".

Existing Asbestos Concrete Pipe shall be handled in accordance with NCTCOG Item 604 and details governing such work.

Measurement and payment for work performed and materials furnished related to abandoning existing water line, as provided herein, shall be made on the basis of the price bid per linear feet (LF) and shall be total compensation for furnishing and/or operating all labor, materials, tools, equipment and other incidentals necessary to complete the work.

**Bid Item No. W8 - WATER TESTING**

This work includes the testing of the water line in accordance with plans, specifications, details, and NCTCOG Item 506.

Measurement and payment shall be made on the basis of the price per bid lump sum (LS) and shall be total compensation for furnishing all materials, tools, equipment, labor, and any other incidentals necessary to complete the work.

**Bid Item No. W9 - TRENCH EXCAVATION PROTECTION (WATER SYSTEM)**

This work includes preparing a job specific trench safety plan and installing the proper shoring and/or bracing to adequately provide a safe trench for all water improvements, in compliance with current regulations and requirements of the United States Department of Labor Occupational Safety and Health Administration (OSHA). The CONTRACTOR shall have a Trench Safety Plan prepared, signed, and sealed by a professional engineer and provided to the ENGINEER prior to the start of construction. The preparation of the trench safety plan, as required by these specifications, will not be paid for directly but shall be considered subsidiary to this pay item.

Measurement and payment for work performed and materials furnished related to the preparation of a trench safety plan and the installation of a trench safety systems, as provided herein, shall be made on the basis of the price bid per linear foot (LF) of trench exceeding a depth of 4-ft and shall be total compensation for furnishing and/or operating all labor, materials, tools, equipment and other incidentals necessary to complete the work.

**Bid Item No. SS1 - 8" PVC SSWR LINE**

This work includes the installation of ASTM D3034 PVC sewer pipe and fittings at the locations and to the grades shown on the plans. Work shall be in accordance with NCTCOG Items 501, 502, 503, 504, 505, 507, 509 and Standard Construction Details. Payment shall include furnishing, hauling and laying of pipe shown on the plans, trench excavation, dry boring under existing utilities if necessary, and backfilling, including embedment material as specified, replacement of top soil, protecting or replacing existing structures or utilities, mandrel pulling, testing, disposal of surplus materials, general clean-up and maintenance. Payment shall include any and all extra precautions or construction requirements necessary to adequately protect and support existing utilities. Payment for the pipelines shall include all costs required to have utility companies repair any damage inflicted to their lines by the CONTRACTOR and any cleanup, property damages, fines, etc. resulting from damage inflicted to any utility line by the CONTRACTOR.

Embedment for sewer lines shall be per NCTCOG standard details, unless otherwise noted.

This item includes submittal of a plan and execution of the approved plan for any necessary bypass pumping.

This work shall also include the construction of temporary pavement repair necessary for traffic control and detours or as determined by the ENGINEER. Temporary pavement repair shall be constructed and maintained in sanitary sewer installation areas as indicated in the construction plans that will be open to traffic prior to the construction of the final pavement. Temporary pavement repair, as required by these specifications, will not be paid for directly but shall be considered subsidiary to this pay item.

Measurement and payment shall be made on the basis of price bid per linear foot (LF), regardless of depth, measured horizontally from center of manhole to center of manhole or cleanout without any deduction for the length of pipe through manholes and shall be total compensation for furnishing all materials, tools, equipment, labor, and any other incidentals necessary to complete the work, including all excavation, embedment and backfill.

**Bid Item No. SS2 - 4' STANDARD MANHOLE**

This work includes the installation of 4' diameter standard sanitary manholes per NCTCOG item number 502.1 and Town of Addison Construction Details. Payment shall include excavation, castings, reinforcing steel, concrete, backfill, and other materials, and all appurtenances for a complete and functional unit. Both pre-cast and cast-in-place manholes are permitted for this project.

This item includes submittal of a plan and execution of the approved plan for any necessary bypass pumping.

Measurement and payment shall be made on the basis of price bid per each (EA). There is no separate bid item for extra depth of manhole. The contract price shall be the total compensation for the furnishing of all labor, materials, tools, equipment, and incidentals necessary to complete the work, including curb identification markings, earth excavation, disposal of surplus materials and backfill.

**Bid Item No. SS3 - CEMENT STABILIZED SAND ENCASEMENT (MIN. 10% CEMENT/CY)**

This work includes the installation of Cement Stabilized Sand Encasement in the areas shown in the drawings. Work shall completed be in accordance with latest TCEQ requirements.

Unless otherwise noted the cement, stabilized sand shall have a minimum content of 10%, based on loose dry weight volume.

Measurement and payment shall be made on the basis of price bid per linear foot (LF), regardless of depth, and shall be total compensation for furnishing all materials, tools, equipment, labor, and any other incidentals necessary to complete the work.

**Bid Item No. SS4 - SANITARY SEWER CCTV INSPECTION**

This work includes the testing of the TV testing in accordance with plans, specifications, and details.

Cost for additional testing per NCTCOG requirements will not be paid for separately, but should be considered subsidiary to the various items.

Measurement and payment shall be made on the basis of the price per bid lump sum (LS) and shall be total compensation for furnishing all materials, tools, equipment, labor, and any other incidentals necessary to complete the work.

**Bid Item No. SS5 - TRENCH EXCAVATION PROTECTION (SANITARY SEWER IMPROVEMENTS)**

This work includes preparing a job specific trench safety plan and installing the proper shoring and/or bracing to adequately provide a safe trench for all sanitary sewer improvements, in compliance with current regulations and requirements of the United States Department of Labor Occupational Safety and Health Administration (OSHA). The CONTRACTOR shall have a Trench Safety Plan prepared, signed, and sealed by a professional engineer and provided to the ENGINEER prior to the start of construction. The preparation of the trench safety plan, as

required by these specifications, will not be paid for directly but shall be considered subsidiary to this pay item.

Measurement and payment for work performed and materials furnished related to the preparation of a trench safety plan and the installation of a trench safety systems, as provided herein, shall be made on the basis of the price bid per linear foot (LF) of trench exceeding a depth of 4-ft and shall be total compensation for furnishing and/or operating all labor, materials, tools, equipment and other incidentals necessary to complete the work.

**Bid Item No. O1 – OWNER'S CONTIGENCY**

This item will be used at the Owner's discretion to cover any unexpected costs associated with performing the work.

20. **SUBSIDIARY WORK:** Any and all Work specifically governed by documentary requirements for the Project, such as conditions imposed by the Plans or these Special Provisions, in which no specific item for bid has been provided for in the Proposal, shall be considered as a subsidiary item of Work, the cost of which shall be included in the various bid items in the Proposal. Costs of CCTV, permits, inspection fees, traffic control, construction staking, surface restoration and cleanup are general items of Work which fall in the category of subsidiary Work. Any repairs or replacement of items damaged during demolition or as a result of new construction will be considered subsidiary. Limits of all Work requiring repair will be determined by the Town of Addison staff or the inspector. Extreme care should be taken during all demolition and construction operations.

21. **QUALIFICATION OF BIDS:** The Town of Addison reserves the right to reject any and all Bids, to waive any and all informalities not involving price, time or changes in the Work, and the right to disregard all nonconforming, non-responsive, unbalanced, or conditional Bids. The Town reserves the right to reject the Bid of any Bidder if the Town believes that it would not be in the best interest of the Project to make an award to that Bidder, whether because the Bid is not responsive or the Bidder is unqualified or of doubtful financial ability or fails to meet any other pertinent standard or criteria established by the Town. Discrepancies in the multiplication of units of Work and unit prices will be resolved in favor of the unit prices. Discrepancies between the indicated sum of any column of figures and the correct sum thereof will be resolve in favor of the correct sum.

**To be considered responsive, the apparent two lowest Bidders are required to submit the Statement of Experience per Section BQS "Bidder Qualification Statement" within 5 days.**

The apparent low two Bidders will be notified by the Engineer to request the information.

**AWARD AND EXECUTION OF CONTRACT:** For the purpose of award, each bid submitted shall consist of three parts whereby the correct summation of the products of the estimated quantities shown in the proposal, multiplied by their bid unit prices for the following parts:

☐ **BELLA LANE SOUTH EXTENSION & ALPHA ROAD CONNECTOR**

Bidders must fill bid proposal for all base bids and all additive alternates. The method of Award will be based on the lowest qualified bidder for all base bids plus any combination of the additive alternates depending on the availability of funds.

The Town reserves the right to accept whichever bid is determined to be in the best interest of the public and to reject all bids.

All payments will be based on actual quantities and bid unit prices.

22. **EXPLANATION OF CONTRACT TIME:** The term "Contract Time" as used in this Provision will mean the **330** calendar days (approx. 11 months) for substantial completion of the Work of the Contract from the date the Contract was executed. The term "calendar day" as used in this Article will mean every day shown on the calendar. Calendar days will be consecutively counted from commencement of Contract Time (issuance of a Notice to Proceed) regardless of weather, weekends, and holidays, suspensions of Contractor's operations, delays or other events as described herein.

In the event of a catastrophic event (i.e., war, invasion, riot, declared state of emergency, national strike, or other situations as declared by the Town of Addison) directly and substantially affecting the Contractor's operations on the Contract, the Contractor and the Town shall agree as to the number of calendar days to extend the Contract Time. In the event the Contractor and Town are unable to agree to the number of calendar days to extend the Contract Time, the Town shall unilaterally determine the number of calendar days to extend the Contract Time reasonably necessary and due solely to such catastrophic event and the Contractor shall have no right whatsoever to contest such determination, save and except that the Contractor establishes that the number of calendar days determined by the Town were arbitrary or without any reasonable basis.

Should the Contractor fail to complete the Contract on or before expiration of the Allowable Contract Time, as adjusted in accordance with the special provisions No. 78 of liquidated damage, the Town shall deduct from the moneys due the Contractor the Daily Value for each calendar day completion exceeds the Allowable Contract Time. The term "Allowable Contract Time" as used in this Article shall mean the Original Contract Time plus adjustments pursuant to the statements above. This deduction shall be the disincentive for the Contractor's failing to timely complete the Contract. **This shall be strictly enforced.**

23. **COPIES OF PLANS FURNISHED:** One (1) copy of 24" x 36" and one (1) electronic copy of the Plans shall be furnished to the successful Contractor, at no charge, for construction purposes.

24. **PRE-CONSTRUCTION CONFERENCE:** The successful Contractor, Engineer, and Town of Addison shall meet for a pre-construction conference before any of the Work begins on this Project. At this time, details of sequencing of the Work, contact individuals

for each party, testing requirements, submittals, traffic control, time sensitive completion of the project and pay requests will be covered. Prior to the meeting, the Contractor shall prepare schedules showing the sequencing and progress of their Work and its effect on others. A final composite schedule will be prepared during this conference to allow an orderly sequence of Project construction.

**Prior to the start of construction, Contractor shall video the construction area and property adjacent to construction in the presence of the City Inspector. The format shall be DVD. The video shall be narrated. The Contractor shall furnish the Town of Addison a copy of the video in DVD format prior to commencement of Project. This shall be subsidiary to Project.**

25. **MOBILIZATION:** Mobilization and Demobilization includes the movement of all labor, equipment and supplies, establishment of facilities necessary for work, and other work and operations which must be performed and cost no directly attributable to other pay items, excluding bidding costs, which must be incurred in order to enable the Contractor to begin work on other contract items. And this item incudes all work for removing all equipment and supplies and project site cleanup.

Payment

- Partial Payments of the Lump Sum bid for Mobilization shall be limited as follows:
- When 1% of the *adjusted contract amount is earned, 50% of the Mobilization Lump Sum or 5% of the total contract amount shall be paid, whichever is less. Previous payments under this item will be deducted from this amount.
- When 5% of the *adjusted contract amount is earned, 75% of the Mobilization Lump Sum or 10% of the total contract amount shall be paid, whichever is less. Previous payments under this item will be deducted from this amount.
- When 10% of the *adjusted contract amount is earned, 100% of the Mobilization Lump Sum or 10% of the total contract amount shall be paid, whichever is less. Previous payments under this item will be deducted from this amount.
- When all work under the contract is completed by the Contractor and accepted by the Town, 100% of the Mobilization Lump Sum will be paid

26. **GENERAL SEQUENCE OF CONSTRUCTION:** Prior to the start of Work, the Contractor shall develop a detailed construction and sequence of construction schedule using the critical path method (CPM) and submit to the Town of Addison and Engineer for approval. The CPM shall reflect all definable features of Work and activities that shall cause minimum interference with traffic along, across and adjacent to the Project during construction. If the schedule or sequence becomes unworkable or unsatisfactory as Work proceeds, adjustments shall be made. During all phases of construction access to all existing businesses must be maintained at all times unless otherwise authorized in writing

by the Town of Addison. Erosion control devices must be properly installed and maintained during all stages of construction.

1. The project schedule shall be prepared using Microsoft Project, Primavera P6 or other as approved by the OWNER. Electronic files in the scheduling software native format and PDF copies shall be included with all schedule submittals.
2. The Original Project Schedule submitted prior to construction and approved by the OWNER shall become the basis for measuring progress and evaluating whether the project is on schedule (Baseline schedule for the project). Once approved by the OWNER, the Original Project Schedule shall not be changed.
3. There shall be at a minimum one schedule Activity for each major bid item in the proposal. Many bid items will need to consist of multiple Activities.
4. The length of this project is such that many Activities or Sets of activities will be repeated for various stages of construction and segments of the roadway. Any repeated Activity must clearly identify the location and/or stage of construction.
5. The schedule must be based on clearly defined Activities, phases of construction and any project milestones. Schedule limits must be easily field verified.
6. All Activities must have Predecessor and Successor activities (except start and finish milestones). Independent or open-ended activities shall not be included.
7. The schedule must clearly identify relationship between Predecessor and Successor activities as "start-to-start", "start-to-finish", or "finish-to-finish".
8. Negative lag times shall not be permitted.
9. Activities with a duration of twenty days or greater shall be broken into sub-activities. (For example, if the activity for "Install Water Line A" has a duration of 21 days, is should be divided into sub-activities such as "Install Water Line A, Sta 0+00 to 15+00", etc.)
10. Monthly schedule updates shall include actual start and completion dates for completed and ongoing Activities. Original Project Schedule dates must be shown for tracking purposes.
11. For activities behind schedule, a Recovery Plan must be submitted detailing how project will be brought back within schedule. This may include such measures as adding work crews, leasing additional equipment, or engaging subcontractors. Fragnets or copies of the revised schedule reflecting proposed changes shall be used to document proposed plan revisions and their schedule impacts. Any additional costs resulting from Recovery Plan measures shall be at the contractor's sole expense.
12. Activity durations reflected in the original schedule cannot be reduced without a Recovery Plan description reflecting what additional resources or actions will implemented justifying the schedule change.

The Contractor must comply with all work area restrictions as indicated in the Plans unless specifically authorized in writing by the Town of Addison.

27. **PROJECT REPRESENTATIVE:** The Town of Addison, the Engineer, the Contractor(s), and any applicable public utilities shall designate a single individual within

their organization to act as liaison for the Project. This individual shall be aware of the day to day activities on the Project, have authority to make decisions binding on the party, and serve as single point for coordination of activities with the other team members. The Contractor's representative must be available to meet and discuss construction related issues on site or at the Town's offices within 20 minutes of a request during working hours and throughout the entire construction period. Upon repeated failure of attendance at requested meetings, Contractor will be required to have a Project representative on-site at all times.

**28.** **COORDINATION WITH OTHERS:** In the event that other Contractors are doing Work in the same area simultaneously with this Project, the Contractor shall coordinate his proposed construction with that of the other Contractors. The Town of Addison and/or the Engineer shall mediate any disputes, and the Contractors shall comply with their decisions.

**29.** **INSURANCE:** Each insurance policy that the Contractor must furnish in accordance with these contract documents shall name the Town of Addison and the Engineer as additional insured. Contractor shall include in their bid package, a copy of their certificate of insurance showing compliance to the limits established by the Town of Addison.

1.0 The Contractor shall agree to furnish and maintain continuously during the period of this agreement, any renewals or extension, insurance coverage meeting all of the following requirements:

1.1 Commercial General Liability Insurance at minimum combined single limits of $1,000,000 per occurrence and $2,000,000 general aggregate for Bodily Injury and Property Damage, which coverage shall include Products/Completed Operations, and XCU Hazards. Coverage for product/completed operations must be maintained for at least two (2) years after the construction Work has been completed. Coverage must be amended to provide for an each-project aggregate limit of insurance. Contractual Liability must be included.

1.2 Workers Compensation Insurance at statutory limits, including employer's liability coverage at minimum limits of $1,000,000 each occurrence-each accident, $1,000,000 by disease-each occurrence and $1,000,000 by disease aggregate

1.3 Commercial Automobile Liability Insurance at minimum combined single limits of $1,000,000 per occurrence for bodily injury and property damage, including owned, non-owned, and hired car coverage.

1.4 Umbrella Liability at minimum limits of $1,000,000 each-occurrence $4,000,000 aggregate with respect to primary commercial general liability, automobile liability and employer's liability policies.

1.5 Any Subcontractor(s) hired by the Contractor shall maintain insurance coverage equal to that required by the Contractor. It is the responsibility of the Contractor to assure compliance with this provision. The Town accepts no responsibility arising from the conduct, or lack of conduct, of the Subcontractor.

1.6 A comprehensive general liability insurance form may be used in lieu of a commercial general liability form. In this event, coverage must be written on an occurrence basis, at limits of $1,000,000 each-occurrence, combined single limit and coverage must include a broad form comprehensive general liability endorsement, products/completed operations, XCU hazards and contractual liability.

2.0 With reference to the foregoing insurance requirements, Contractor shall specifically endorse applicable insurance policies as follows:

2.1 The Town shall be named as an additional insured with respect to general liability and automobile liability.

2.2 All liability policies shall contain no cross liability exclusions or insured versus insured restrictions.

2.3 A waiver of subrogation in favor of the Town of Addison shall be contained in the workers compensation and all liability policies.

2.4 All insurance policies shall be endorsed to require the insured to immediately notify the Town of Addison of any material changes in the insurance coverage.

2.5 All insurance policies shall be endorsed to the effect that the Town will receive at least thirty (30) days notice prior to cancellation or non-renewal of the insurance.

2.6 All certificates shall be mailed to Town of Addison, Purchasing Dept., P.O. Box 9010, Addison, Texas 75001 or emailed to purchasing@addisontx.gov.

2.7 All insurance policies, which name the Town as an additional insured, must be endorsed to read as primary coverage regardless of the application of other insurance.

2.8 Required limits may be satisfied by any combination of primary and umbrella liability insurances.

2.9 Contractor may maintain reasonable and customary deductibles, subject to approval by the Town.

3.0 All insurance shall be purchased from an insurance company who meets the following requirements:

3.1 Must be issued by a carrier, which is rated "A-" VII or better by A.M. Best's Key Rating Guide.

3.2 Licensed and admitted to do business in the State of Texas and is a subscriber to the Texas Guaranty Fund.

4.0 All insurance must be written on forms filed with and approved by the Texas State Board of Insurance. Certificates of insurance shall be prepared and executed by the insurance

company or its authorized agent and shall contain provisions representing and warranting the following:

4.1 Set forth all endorsements and insurance coverages according to requirements and instruction contained herein.

4.2 Shall specifically set forth the notice-of-cancellation or termination provisions to the Town.

5.0 Upon request, Contractor shall furnish the Town of Addison with certified copies of all insurance policies.

**WORKERS' COMPENSATION INSURANCE COVERAGE:**

A. Definitions.

**Certificate of Coverage** ("certificate") - A copy of a certificate of insurance, a certificate of authority to self insure issued by the Texas Workers' Compensation Commission (the "TWCC"), or a coverage agreement (TWCC-81, TWCC-82, TWCC-83 or TWCC-84), showing statutory workers' compensation insurance coverage for the person's or entity's employees providing services on a Project, for the duration of the Project.

**Duration of the Project** - includes the time from the beginning of the Work on the Project until the Contractor's/person's Work on the Project has been completed and accepted by the governmental entity.

**Persons Providing Services on the Project** ("Subcontractor" in Section 406.096 of the Texas Labor Code) - includes all persons or entities performing all or part of the services the Contractor has undertaken to perform on the Project, regardless of whether that person contracted directly with the Contractor and regardless of whether that person has employees. This includes, without limitation, independent Contractors, Subcontractors, leasing companies, motor carriers, Town-operators, employees of any such entity or employees of any entity which furnishes persons to provide services on the Project. "Services" include, without limitation, providing, hauling, or delivering equipment or materials, or providing labor, transportation, or other service related to a Project. "Services" does not include activities unrelated to the Project, such as food/beverage vendors, office supply deliveries, and delivery of portable toilets.

B. The Contractor shall provide coverage, based on property reporting of classification codes and payroll amounts and filing of any coverage agreement, which meets the statutory requirements of Texas Labor Code, 401.011(44) for all employees of the Contractor providing services on the Project, for the duration of the Project.

C. The Contractor must provide a certificate of coverage to the Town of Addison prior to being awarded the contract.

D. If the coverage period shown on the Contractor's current certificate of coverage ends during the duration of the Project, the Contractor must, prior to the end of the coverage

period, file a new certificate of coverage with the Town of Addison, showing that the coverage has been extended.

E. The Contractor shall obtain from each person providing services on the Project, and provide to the Town of Addison:

(1) a certificate of coverage, prior to that person beginning Work on the Project, so that the Town of Addison will have on file certificates of coverage showing coverage for all persons providing services on the Project; and,

(2) no later than seven days after receipt by the Contractor, a new certificate of coverage showing extension of coverage, if the coverage period shown on the current certificate of coverage ends during the duration of the Project;

F. The Contractor shall retain all required certificates of coverage on file for the duration of the Project and for one year thereafter.

G. The Contractor shall notify the Town of Addison in writing by certified mail or personal delivery, within 10 days after the Contractor knew or should have known, of any change that materially affects the provision of coverage of any person providing services on the Project.

H. The Contractor shall post on each Project site a notice, in the text, form and manner prescribed by the TWCC, informing all persons providing services on the Project that they are required to be covered, and stating how a person may verify current coverage and report failure to provide coverage.

I. The Contractor shall contractually require each person with whom it contracts to provide Services on a Project to:

(1) provide coverage, based on proper reporting of classification codes and payroll amounts and filing of any coverage agreements, which meets the statutory requirements of Texas Labor Codes 401.011 (44) for all its employees providing services on the Project, for the duration of the Project;

(2) provide to the Contractor, prior to that person beginning Work on the Project, a certificate of coverage showing that coverage is being provided for all employees of the person providing services on the Project, for the duration of the Project;

(3) provide the Contractor, prior to the end of the coverage period, a new certificate of coverage showing extension of coverage, if the coverage period shown on the current certificate of coverage ends during the duration of the Project;

(4) obtain from each person with whom it contracts, and provide to the Contractor;

a. a certificate of coverage, prior to the other person beginning Work on the Project; and,

b. a new certificate of coverage showing extension of the coverage period, prior to the end of the coverage period, if the coverage period shown on the current certificate of coverage ends during the duration of the Project.

(5) retain all required certificates of coverage on file for the duration of the Project and for one year thereafter;

(6) notify the Town of Addison in writing by certified mail or personal delivery, within 10 days after the person knew or should have known, of any change that materially affects the provision of coverage of any person providing services on the Project; and

(7) contractually require each other person with whom it contracts to perform as required by paragraphs (1) - (7) with the certificate of coverage to be provided to the person for whom they are providing services.

J. By signing this contract or providing or causing to be provided a certificate of coverage, the Contractor is representing to the Town of Addison that all employees of the Contractor who will provide services on the Project will be covered by worker's compensation coverage for the duration of the Project, that the coverage will be based on proper reporting of classification codes and payroll amounts, and that all coverage agreements will be filed with the appropriate insurance carrier or, in the case of a self-insured, with the TWCC's Division of Self-Insurance Regulation. Providing false or misleading information may subject the Contractor to administrative penalties, criminal penalties, civil penalties or other civil actions.

K. The Contractor's failure to comply with any of these provisions is a breach of contract by the Contractor which entitles the Town of Addison to declare the contract void if the Contractor does not remedy the breach within ten days after receipt of notice of breach from the Town.

The following is the form of notice of workers' compensation coverage prescribed by the TWCC. Pursuant to Section 110.110 (d) (7), this notice must be printed with a title in at least 30-point bold type, and text in at least 19-point nominal type, and shall be in both English and Spanish and any other language common to the worker population.

**REQUIRED WORKERS' COMPENSATION COVERAGE**

"The law requires that each person working on this site or providing services related to this construction Project must be covered by workers' compensation insurance. This includes persons providing, hauling or delivering equipment or materials, or providing labor or transportation or other service related to the Project, regardless of the identity of their employer or status as an employee.

"Call the Texas Workers' Compensation Commission (TWCC) at (512) 440-3789 to receive further information on the legal requirements for coverage, to verify whether your employer has provided the required coverage, or to report an employer's failure to provide coverage."

30. **RESOLUTION OF DISPUTES:** The parties hereby covenant and agree that in the event of any controversy, dispute, or claim, of whatever nature arising out of, in connection with or in relation to the interpretation, performance or breach of this Contract, including but not limited to any claims based on contract, tort or statute, before filing a lawsuit, the parties agree to submit the matter to Alternative Dispute Resolution pursuant to the laws of the State of Texas. The parties shall select a third party arbitrator or mediator from the current list of neutrals on file with the Alternative Dispute Resolution Administrator of the Dallas County District Courts or other mutually agreeable mediator or arbitrator. All forms of Alternative Dispute Resolution may be used except binding arbitration. The proceedings shall be conducted in accordance with the laws of the State of Texas.

31. **SHOP DRAWINGS:** The Contractor shall provide, review, approve and submit all shop drawings, product data and samples required by the Town of Addison, the Engineer and the Contract Documents in accordance with Item 1.28 of the Standard Specifications for Public Works Construction, North Central Texas Council of Governments. The Contractor shall electronically submit shop drawing for review to Kimley-Horn, who will review, comment and forward to the Town of Addison for acceptance.

Shop drawings shall include all items to be installed in the Project, including but not limited to:

| | | |
|---|---|---|
| ☐ Concrete Mix Designs | ☐ Traffic Control Plan | ☐ Water Main Pipe/Fitting |
| ☐ Storm Sewer Pipe | ☐ Bridge Superstructure | ☐ Valves & Boxes |
| ☐ Rock Riprap | ☐ Manholes & Vaults | ☐ Backfill Materials |
| ☐ Sanitary Sewer Pipe/Fitting | ☐ Metal Beam Guard Fence | ☐ Handrail Shop Drawings |

32. **PROJECT VIDEO:** Prior to the start of construction, Contractor shall video the construction area and property adjacent to construction in the presence of the City Inspector. The format shall be DVD. The video shall be narrated. The Contractor shall furnish the Town of Addison a copy of the video in DVD format prior to commencement of Project. This effort shall be considered as subsidiary to the various bids items for this Project (See Section 19).

33. **SAMPLES AND TESTS OF MATERIALS:** The Town of Addison shall designate and pay an independent testing laboratory to furnish testing for this Project. Random testing will be provided by the independent lab as necessary for compliance with the Specifications. The Contractor shall coordinate construction with the testing lab and the Town of Addison, and shall provide assistance to the testing labs by providing excavation, access, trench safety, materials for testing and any other Work required to insure all testing requirements are met. Work performed to accommodate testing will be a subsidiary item and no extra payment will be authorized. All costs for the field quality control testing shall be paid for by the Town of Addison, except for any and all re-testing, which shall be paid by the Contractor and such cost shall be deducted from monthly pay requests. As a guide, the Contractor shall be responsible for providing any test required by the Specifications.

All samples and tests shall be performed in accordance with the Standard Specifications for Public Works Construction, North Central Texas Council of Governments (5th Addition) as amended or supplemented.

34. **INSPECTION:** The Town of Addison and the Engineer reserve the right to inspect, test, measure or verify the construction Work for this Project as they deem necessary to ascertain that the Work is being accomplished in accordance with the standards and requirements set forth in the Contract Documents. Notwithstanding such reviews, the Contractor will be held responsible for the finished Work and any acceptance of the Work by the Town or governmental agencies will not relieve the Contractor from responsibility for the Work. The Town reserves the right to place full-time construction inspectors at the site of the Work. Costs for inspection services will be paid by the Town of Addison. The Contractor shall provide assistance to the Town of Addison and the Engineer by providing excavation, trench safety, or other Work necessary to facilitate inspection activities, and shall give sufficient notice well in advance of pending construction activities for scheduling of inspection services.

If the Specifications, the Town's instructions, laws, ordinances, or any public authority require any Work to be specially tested, the Contractor shall give the Town timely notice of its readiness for testing, and if the testing is by an authority other than the Town, of the date fixed for such testing. Tests by the Town shall be made promptly, and where practicable at the source of supply.

35. **ACCESS ROUTES, STAGING AREAS AND STORAGE AREAS:** All haul roads and access routes and the location of job site trailers, staging areas, and storage areas shall be subject to the approval of the Town and the Engineer. The Contractor shall be responsible for obtaining a staging area for storage of equipment and materials and for employee parking. The Contractor is responsible for maintaining and repairing all roads and other facilities used during construction. Upon completion of the Project all existing roads and other disturbed areas shall be left in a condition equal to that at the time the Contractor commences Work on this Project.

36. **PROPERTY ACCESS:** Access to adjacent commercial property shall be maintained at all times unless otherwise directed by the Engineer and/or Town of Addison. Contractor shall also maintain sufficient access throughout the Project limits to the existing buildings and businesses during construction operations.

37. **PLANT, PROCEDURES, METHODS AND EQUIPMENT:** The Contractor shall determine the methods to be employed, the procedures to be followed, and equipment to be used on the Work under this contract, subject to the requirements of these Specifications and approval of the Engineer and Town of Addison. Only adequate and safe procedures, methods and equipment shall be used.

The Contractor shall so arrange his Work and provide such plant and equipment as is necessary in order to meet the progress requirements of the approved time schedule and to complete the Work within the period of time as specified in the Contract. Only such

materials and equipment as are necessary for the construction of the Work under this contract shall be placed, stored or allowed to occupy any space at the site of the Work.

It is expressly agreed that the acceptance or approval of any order of procedure, methods or equipment submitted or employed by the Contractor shall not in any manner relieve the Contractor of responsibility for the safety, maintenance and repairs of any Work, or for the construction maintenance and safety of the Work hereunder, or from any liability whatsoever on account of any procedure or method employed by the Contractor.

Where the Work under this contract requires permits from the Town of Addison, the State of Texas, or other public authorities, duplicate copies of such permits shall be furnished to the Engineer by the Contractor before the Work covered thereby is started. **NO WORK WILL BE ALLOWED TO PROCEED BEFORE REQUIRED PERMITS ARE OBTAINED AND DISTRIBUTED.**

38. **PARKING OF CONSTRUCTION EQUIPMENT:** During all other periods of time when the Contractor's or their sub-contractors equipment is not being actively used on the construction Work, the Contractor shall park the equipment at locations which are approved by the Town of Addison. The Contractor shall provide adequate barricades, markers and lights to protect the Town of Addison, the Engineer, the public and other Work. All barricades, lights, and markers must meet the requirements of the Town of Addison, State and Federal regulations.

39. **ZONING REQUIREMENTS:** During the construction of this Project, the Contractor shall comply with the present zoning requirements of the Town of Addison in the use of vacant property for storage purposes.

40. **IN PUBLIC ROADS AND PRIVATE DRIVES:** No public road shall be entirely closed overnight, unless approved by the Town of Addison. It shall be the responsibility of the Contractor to build and maintain all weather bypasses and detours, if necessary, and to properly light, barricade and mark all bypasses and detours that might be required on and across the roads involved in the Work included in this Contract.

The Contractor shall make every effort to complete construction and allow immediate access to adjacent property at driveway entrances located along the roadways. Towns or tenants of improvements where access and/or entrance drives are located shall be notified at least twenty-four (24) hours prior to the time the construction will be started at their driveways or entrances and informed as to the length of time driveways will be closed. Contractor shall at all times maintain at least one point of access into all properties, unless obtaining written permission from property owner to do otherwise with such written permission being provided to the Town's inspector.

The Contractor shall be responsible for all road and entrance reconstruction and repairs and maintenance of same for a period of two years from the date of Town of Addison's acceptance of the Work. In the event the repairs and maintenance are not made immediately to the satisfaction of the Town, and it becomes necessary for the Town to make such repairs, the Contractor shall reimburse the Town for the cost of such repairs.

The Contractor shall, at all times, keep a sufficient width of the roadway clear of dirt and other material to allow the free flow of traffic. The Contractor shall assume any and all responsibility for damage, personal or otherwise, that may be caused by the construction along roads and private drives.

41. **HAULING ON TOWN OF ADDISON STREETS:** The Contractor shall receive approval of its haul routes and type of equipment to be used prior to beginning construction. The Contractor shall be responsible for maintaining the cleanliness of existing paved roadways and shall provide equipment and manpower for that purpose.

42. **EXISTING POWER POLES & GUY WIRES:** The Contractor shall have the responsibility of coordinating with the proper authorities for the bracing, replacing or relocating of all utility poles and guy wires which interfere with the Work on this Project prior to beginning its construction operations. The Contractor will also be responsible for all damage to poles, guy wires, etc. that are damaged or destroyed by Contractor's operations.

43. **SAFETY RESTRICTIONS - WORK NEAR HIGH VOLTAGE LINES:** The contractor is responsibly for the site safety of the project. Contractor shall follow governing regulatory requirements when working near high voltage lines, including but not limited to, OSHA 1926 and Town of Addison requirements.

44. **PROTECTION OF EXISTING UTILITIES AND STRUCTURES:** The location and dimensions shown on the Plans relative to existing utilities and subsurface structures are based on the best records and/or field information available and are not guaranteed by the Town of Addison or the Engineer to be accurate as to location and depth. It shall be the Contractor's responsibility to verify locations of adjacent and conflicting utilities sufficiently in advance of its activities in order that he may negotiate such restrictive locations with the Town of Addison of the conflicting utility and/or make local adjustments to provide adequate clearances. The Contractor shall take all necessary precautions in order to protect all utilities and services encountered, whether or not they are indicated on the Plans. All damage to utilities resulting from Contractor's operations shall be restored at its expense. The Town of Addison and the Engineer assume no responsibility for failure to show any or all of these utilities or structures on the Plans, or to show them in their exact locations. It is mutually agreed that such failure shall not be considered sufficient basis for claims for additional compensation for Extra Work or for increasing the pay quantities in any manner whatsoever, unless the obstruction encountered is such as to necessitate changes in the lines or grades, or requires the building of special Work, provisions for which are not made in the Plans, in which case, provisions in these Specifications for Extra Work shall apply.

45. **PUBLIC UTILITIES AND OTHER PROPERTY TO BE CHANGED:** In case it is necessary to change or move the property of a public utility, such property shall not be moved or interfered with until authorized by the Town of Addison or the Engineer. The right is reserved for the Owner of public utilities to enter upon the limits of the Project for the purpose of making such changes or repairs of their property that may be made necessary by performance of the Contract. The Contractor shall be responsible for coordination with

the Town of Addison and the Engineer, and all utility companies whose utility lines or streets may be affected by the proposed improvements. The Contractor shall observe the following:

a. Prior to any excavation, the Contractor shall determine the locations of all existing water, gas, sewer, electric, telephone, telegraph, television, pipelines and other underground utilities and structures.

b. After commencing Work, the Contractor shall use every precaution to avoid interference with existing underground and surface utilities and structures, and protect them from damage.

c. Where the locations of existing underground and surface utilities and structures are indicated, these locations are generally approximate, and all items which may be encountered during the Work are not necessarily indicated. The Contractor shall determine the exact locations of all items indicated, and the existence and locations of all items not indicated.

d. The Contractor shall repair or pay for all damage caused by its operations to all existing utility lines, public property, and private property, whether it is below ground or above ground, and he shall defend and settle in total the cost of all lawsuits which may arise as a result of its operations.

e. To avoid unnecessary interferences or delays, the Contractor shall coordinate all utility removals, replacements and construction with the appropriate utility company, and then request written authorization from the Town of Addison or the Engineer. The Town of Addison and the Engineer will not be liable for damages due to delay as a result of the above.

**46.** **MAINTENANCE AND REPAIRS:** The Contractor shall maintain and keep in good repair all Work contemplated under these Plans, Specifications, and Plans which shall include the maintenance and repair of all existing streets, storm sewer crossings, utility crossings, temporary crossings for access to adjacent property, barricades, lights, and danger signals, and all Work which is necessary for the well-being of the general public. In the event the Contractor fails in its obligations to properly maintain the Work, the Town of Addison shall make such repairs as are necessary and the cost of such repairs shall be deducted from payment due the Contractor.

**47.** **PROTECTION OF WORK:** During performance and up to date of final acceptance, the Contractor shall be under the absolute obligation to protect the finished Work against damage, loss or injury. In the event of damage, loss or injury, the Contractor shall promptly replace or repair such Work, whichever the Town of Addison shall determine to be preferable. The obligation to deliver finished Work in strict accordance with the contract prior to final acceptance shall be absolute and shall not be affected by the Town of Addison's approval of or failure to prohibit means and methods of construction used by the Contractor. All risk of loss or damage to the Work shall be borne solely by the

Contractor until final acceptance of all Work by the Town of Addison, as evidenced by the Town of Addison's issuance of a certificate of acceptance.

48. **PUBLIC CONVENIENCE AND SAFETY:** In accordance with generally accepted construction practices, the Contractor shall be solely and completely responsible for conditions of the Project site, including safety of all persons and property during performance of the Work. This requirement shall apply continuously and not be limited to normal Work hours.

Materials stored about the Work site shall be so placed, and the Work shall at all times be so conducted, as to cause no greater obstruction to the traveling public than is considered necessary by the Town of Addison. The materials excavated shall be placed so as not to endanger the Work or prevent free access to all fire hydrants, water valves, gas valves, manholes (telephone, telegraph or electrical conduits, and sanitary sewers) and fire alarm or police call boxes in the vicinity.

The Town of Addison reserves the right to remedy any neglect on the part of the Contractor as regards to the public convenience and safety which may come to the Town of Addison's attention, after 24 hours notice in writing to the Contractor, save in cases of emergency, when the Town of Addison shall have the right to remedy any neglect without notice; and, in either case, the cost of such Work done by the Town of Addison shall be deducted from the monies due or to become due the Contractor. The Contractor shall notify the Town of Addison and the Engineer when any street is to be closed or obstructed. The Contractor shall provide for emergency vehicle access at all times.

Where the Work passes over or through private property, the Town of Addison shall provide such right-of-way. The Contractor shall notify the proper representatives of any public utility, corporation, company or individual, not less than 48 hours in advance of Work which might damage or interfere with the operation of their property along or adjacent to the Work. The Contractor shall be responsible for all damage or injury to property of any character (except such as may be required by the provisions of the Contract Documents, or caused by agents or employees or the Town of Addison) by reason of any negligent act or omission on the part of the Contractor, its employees, agents or Subcontractors, or at any time due to defective Work or materials, or due to its failure to reasonably or properly prosecute the Work, and said responsibility shall not be released by the fact that the Work shall have been completed and accepted.

When and where any such damage or injury is done to public or private property on the part of the Contractor, he shall restore or have restored at its own cost and expense such property to a condition similar or equal to that existing before such damage was done, by repairing, rebuilding or otherwise restoring as he may be directed, or he shall make good such damage or injury in a manner acceptable to the property Town of Addison and the Engineer. In case of failure on the part of the Contractor to restore such property or make good such damage or injury, the Town of Addison may, upon 48 hour written notice under ordinary circumstances, and without notice when a nuisance or hazardous condition results, proceed to repair, rebuild or otherwise restore such property as may be determined

necessary, and the cost thereof shall be deducted from any monies due or to become due to the Contractor under this contract; or where sufficient contract funds are unavailable for this purpose, the Contractor or its surety shall reimburse the Town of Addison for all such costs.

49. **PROTECTION OF PERSONS AND PROPERTY**: The Contractor shall have the responsibility to provide and maintain all warning devices and take all precautionary measures required by law or otherwise necessary to protect the Work and persons and property while said persons or property are approaching, leaving or within the Work site or any area adjacent to said Work site. No separate compensation shall be paid to the Contractor for the installation or maintenance of any protective measures, warning devices, barricades, lights, signs, or any other precautionary measures required by law or otherwise necessary for the protection of persons or property.

The Contractor shall assume all responsibilities to the general public in connection with the general public's immediate approach to and travel through the Work site and the area adjacent to said Work site.

Where the Work is in or adjacent to any street, alley, sidewalk, public right-of-way or public place, the Contractor shall at its own cost and expense provide such flagmen and watchmen and furnish, erect and maintain such warning devices, barricades, lights, signs, and other precautionary measures for the protection of persons or property as may be prudent or necessary, or as required by law. The Contractor's responsibility for providing and maintaining flagmen, watchmen, warning devices, barricades, signs and lights and other precautionary measures shall not cease until the Project shall have been completed and accepted by the Town of Addison, and shall cease when the Town of Addison notifies the Contractor in writing of final Project acceptance.

If the Town of Addison discovers that the Contractor has failed to comply with applicable federal or state laws (by failing to furnish the necessary flagmen, warning devices, barricades, lights, signs or other precautionary measures for the protection of persons or property), the Town of Addison may order the Contractor to take such additional precautionary measures as required by law to protect persons and property. In addition, the Contractor shall be held responsible for all damages to the Work and other public or private property due to the failure of warning devices, barricades, signs, lights or other precautionary measures in protecting said property; and whenever evidence is found of such damage, the Town of Addison may order the damaged portion immediately removed and replaced by and at the cost and expanse of the Contractor.

50. **TRAFFIC CONTROL:** It shall be the responsibility of the Contractor to provide traffic control during the construction as required by the State of Texas, the Town of Addison, and in accordance with the following additional requirements:

a. The Contractor shall be required to furnish barricades, flares, flagmen, etc., for the protection of the public, employees and the Work.

b. The Contractor shall prosecute its Work in such a manner as to create a minimum of interruption to traffic along adjacent roadways.

c. The unit price bid under the appropriate bid item of the proposal shall cover all cost for providing signage, markings, lighting, barricades, flagmen and other devices and personnel required for traffic control during construction of the Project.

d. The Contractor shall not remove any regulatory sign, instructional sign, warning sign, street name sign or any other sign or signal which currently exists.

e. **The Contractor shall provide a comprehensive Traffic Control Plan to the Town of Addison for review, comment, and approval.** In the event the planned sequence of work is different in any way from that sequence of work provided for in the plans or where additional details are required to be reviewed and approved by Addison prior to any further work is performed. The Traffic Control Plan shall be designed in accordance with established standards and regulations and signed and sealed by a professional engineer, registered in the State of Texas. The plan should reflect the Contractor's proposed construction phasing and methodology and include the design layout for all proposed detour and traffic situations. This effort is paid by lump sum in bid item A-31.

51. **BARRICADES, WARNING SIGNS, DETOURS AND SEQUENCE OF CONSTRUCTION:** Throughout the construction operations, streets and intersections will remain open to traffic by constructing the Work in stages. All streets, driveways, adjacent business and alleys shall remain open to traffic as far as is practicable.

A. General Construction: The Contractor shall plan its Work sequence in a manner that will cause minimum interference with aircraft operations during construction operations. Before beginning Work on this Project, the Contractor shall submit, for approval by the Town of Addison, a plan of construction operations outlining in detail a sequence of Work to be followed; setting out the method of handling traffic on streets, roads and driveways along, across and adjacent to the Work. If at any time during the construction, the Contractor's proposed plan of operation for handling traffic does not provide for safe comfortable movement, the Contractor shall immediately change its operations to correct the unsatisfactory conditions.

Ditches across the traffic lanes will be kept covered with a portable traffic-bearing surface at all times unless Work in the ditch is in progress. Only one lane of traffic may be closed at a time when Work is in progress in a ditch.

B. Safety: The Contractor shall provide, construct and maintain barricades and signs at locations set out in the Plans and in the Special Provisions in accordance with the Texas Manual on "Uniform Traffic Control Devices for Streets and Highways". In addition, he shall provide and maintain such other barricades and signs as deemed necessary by the Town or the Engineer, and provide and maintain, between sunset and sunrise, a sufficient number of lights at barricades and points of danger for the protection of vehicular and pedestrian traffic.

Barricades shall be placed in such a manner as not to interfere with the sight distance of drivers entering the street from side streets.

The Contractor shall keep traveled surfaces used in its hauling operation clear and free of dirt or other material.

The Contractor shall provide and maintain qualified flagmen at such points and for such periods of time as may be required to provide for the safety and convenience of public travel and Contractor's personnel.

## 52. EXCAVATION SAFETY SYSTEMS:

The Work performed under this section of the Specifications consists of providing trench safety systems consisting of shoring, sheeting, trench shield, and/or laid back slopes to meet the trench safety requirements of the Occupational Safety and Health Administration (O.S.H.A.), as required for this Project and specified herein.

A. General: Trench safety systems shall be provided by the Contractor as provided in Subpart P - Excavation, Trenching and Shoring, Part 1926 of the Code of Federal Regulations which describes safety and health regulations as administered by the U.S. Department of Labor Occupational Safety and Health Administration (O.S.H.A.). The standards specified by the O.S.H.A. Regulations shall be the minimum allowed on this Project. It shall be the responsibility of the Contractor to design and install adequate trench safety systems for all trenches excavated on this Project.

The Contractor shall furnish to the Town for review, prior to beginning construction activity, a Trench Safety Plan for the entire Project. The trench safety plan must be prepared and sealed by a Professional Engineer registered in the State of Texas. In addition, all trench safety systems utilized in this Project must be designed by a Professional Engineer registered in the State of Texas. The Contractor shall be totally responsible for the safety of all persons involved in the construction of this Project.

B. Core Borings: Any core borings and soil data furnished by the Town are for the convenience of the Contractor. The Contractor shall be responsible for any additional soil or geotechnical information required. The Contractor shall be responsible for properly designed trench safety systems to be utilized for any type of subsurface condition found on this Project. The furnishing of soil information by the Town of Addison in no way relieves the Contractor of this obligation. If no core borings or soil data are furnished by the Town, it shall be the Contractor's responsibility to obtain whatever geotechnical information required for preparation of trench safety systems.

C. Inspections: In addition to the inspections of the trench and trench safety systems required of the Contractor by the O.S.H.A. Regulations, the Town may further inspect the Work. The Town shall have the right to reject any trench safety systems which he finds to be inadequate, and the Contractor shall immediately improve the system to comply with this specification.

D. Measurement and Payment: Measurement and payment of Trench Safety Systems shall be based on the actual linear footage of the pipe installed on the Project. The payment shall be full compensation for all planning, engineering, materials, equipment, fabrications, installation, recovery and all incidental Work required.

53. **TRENCH EXCAVATION, BACKFILL AND COMPACTION:** Trench excavation, backfill and compaction of water and sewer utility trenches shall be in accordance with Town of Addison Standards and with details shown on the Construction Plans.

A. Trench Excavation: If the stated maximum trench widths are exceeded, either through accident or otherwise, and if the Engineer determines that the design loadings of the pipe will be exceeded, the Contractor will be required to support the pipe with an improved trench bottom. The expense of such remedial measures shall be entirely the Contractor's own. All trenching operations shall be confined to the width of permanent rights-of-way, permanent easements and any temporary construction easements. All excavation shall be in strict compliance with the Trench Safety Systems Special Condition of this document.

B. Trench Backfill: Trenches shall be backfilled above the top of the embedment material with approved backfill material per Town of Addison Standards for the appropriate pipe size, pipe material, depth, and soil condition.

C. Compaction: All trenches under proposed or existing pavement shall be compacted to within a range of 95% to 100% Standard Proctor Density. Trenches which lie outside limits of pavement shall be compacted to a minimum of 90% Standard Proctor Density (ASTM D-698).

54. **TRENCH WALLS:** The Contractor shall use shoring or a drag box in those areas where it is required to protect existing improvements. This shall be subsidiary to the linear foot cost of the pipe and not a separate pay item.

55. **SUSPENSION OF WORK RELATED TO DANGER:** In addition to the other remedies for suspension of the Work as provided for in the General Provisions and Special Provisions, the Town of Addison has the authority to suspend all work immediately if, in the Town of Addison's opinion, there is imminent danger to workers or the general public. If there is no imminent danger to workmen or the general public, but trench conditions are not in compliance with Federal Regulations 29 C.F.R. 1926.650-1926.652, the Town of Addison shall warn the Contractor who shall then immediately order all workmen in and adjacent to the trench away from the area. The Contractor must then bring the trench into compliance with the regulations. If the Contractor does not make the required corrections, all work on the Contract shall cease and the Town of Addison will issue a letter of Temporary Suspension of Work. The only work authorized after issuance of this letter is work approved by the regulations. Other work shall not be permitted until the Town of Addison issues a letter of Release of Temporary Suspension of Work. The Contractor shall not be entitled to additional compensation, an extension of time or payment of damages as a result of a temporary suspension of work under this provision.

56. **PROPERTY LINES AND MONUMENTS:** The Contractor shall protect all property corner markers, and when any such markers or monuments are in danger of being disturbed, they shall be properly referenced and if disturbed shall be reset at expense of the Contractor.

57. **CONSTRUCTION STAKING:** Construction staking will not be provided by the Town of Addison or Engineer. This item will be performed by the Contractor and shall be subsidiary to other bid items. The Contractor will also be responsible for maintaining stakes. If re-staking is required for any reason, it will be the Contractor's responsibility, including associated costs.

All construction staking shall be done under the supervision of a Registered Professional Land Surveyor registered in the State of Texas. The Contractor shall submit copies of cut sheets and field books for the construction of all paving, water, wastewater, and stormwater improvements to the Town of Addison for review prior to construction of the improvements. The information on the cut sheets and field books shall include but not be limited to the following:

a. Heading to include date, contract number, Project name, surveying firm, Contractor, and construction plan sheet number.

b. Location, description of street/line and street/line name, number, letter, etc. designation.

c. Benchmark Data: Location, description, and elevation.

d. Slope or percent of grade of each curb line or utility line.

e. Stations at 50 foot intervals and including all PC, PT, PI, PVC, PVI, PVT, PRC, grade changes, etc.

f. Offset description including distance to center line or back of curb and direction of offset; left, right, east, west, etc,

g. Cut to subgrade, pavement, top of curb, or flowline of the street or utility being staked.

h. Clarifying remarks such as top of curb, gutter, pavement, subgrade, manhole, cleanout, valve, tee, cross, fire hydrant, wastewater lateral, water service, etc.

i. Cut sheets shall be signed by a Texas Registered Professional Land Surveyor.

58. **DURING CONSTRUCTION**: During construction of the Work, the Contractor shall, at all times, keep the site of the Work and adjacent premises as free from material, debris and rubbish as is practicable and shall remove same from any portion of the site if, in the opinion of the Town of Addison or the Engineer, such material, debris or rubbish constitutes a nuisance or is objectionable. In case of failure on the part of the Contractor to maintain a clean site, the Town of Addison may, upon 24 hour written notice, clean the site, and the cost thereof shall be deducted from any monies due or to become due to the

Contractor under its contract; or where sufficient contract funds are unavailable for this purpose, the Contractor or its surety shall reimburse the Town of Addison for all such costs.

59. **CONSTRUCTION TRAFFIC OVER PIPE LINES:** The design of the new pipes and the design of the existing pipe have been taken into account and provided for highway live loads. It is apparent, however, that certain construction vehicles could exceed this highway load condition under shallow bury conditions. It will be the responsibility of the Contractor to protect both the new line and the existing lines from these possibly excessive loads. The Contractor shall not at any time cross the existing or new pipe with a truck delivering new pipe to the site. Any damage to the existing or new pipe will be repaired or replaced by the Contractor to the satisfaction of the Town of Addison.

In locations where it is not permissible to cross the existing or proposed pipes without additional protection, the Contractor may elect to provide additional protection of the pipes, such as steel plates, so that more frequent crossings of the pipes are allowed. It still is, however, the responsibility of the Contractor to repair any damage to the existing or proposed lines if the damage results from any phase of its construction operation.

60. **CONTRACTOR'S CONTINUING OBLIGATION:** Contractor's obligation to perform and complete the Work in accordance with the Contract Documents shall be absolute. Neither recommendation of any progress or final payment by the Town of Addison, nor the issuance of a certificate of Substantial Completion, nor any payment by Town of Addison to Contractor under the Contract Documents, nor any use or occupancy of the Work or any part thereof by Town of Addison, nor any act of acceptance by Town of Addison nor any failure to do so, nor any review and approval of a Shop Drawing or sample submission, nor the issuance of a notice of acceptability by the Town of Addison pursuant to final payment nor any correction of defective Work by Town of Addison will constitute an acceptance of Work not in accordance with the Contract Documents or a release of Contractor's obligation to perform the Work in accordance with the Contract Documents.

61. **IRRIGATION AND SPRINKLER REPAIR:** The Contractor shall maintain all existing irrigation systems within the limits of the Project during the duration of the contract, if necessary. The Contractor shall employ a licensed irrigator who is responsible for the repair or replacement of any damage to irrigation lines, valves, controllers, sprinklers, wiring and appurtenances which are damaged during construction. **This repair is subsidiary to the various other items bid. The Contractor will be responsible for any vegetation that dies as a result of damage to the irrigation system and replace it with equal vegetation at its own cost.**

62. **REMOVAL OF DEFECTIVE AND UNAUTHORIZED WORK:** All Work which has been rejected or condemned shall be repaired; or if it cannot be repaired satisfactorily, it shall be removed and replaced at the Contractor's expense. Defective materials shall be immediately removed from the Work site. Work done without line and grade having been provided; Work done beyond the line or not in conformity with the grades shown on the Plans or as provided, Work done without proper inspection; or any Extra or unclassified Work done without written authority and prior agreement in writing as to prices, shall be at the Contractor's risk and will be considered unauthorized, and at the option of the Town

of Addison may not be measured and paid for and may be ordered removed at the Contractor's expense. Upon failure of the Contractor to repair satisfactorily or to remove and replace, if so directed, rejected, unauthorized or condemned Work or materials immediately after receiving notice from the Town of Addison, the Town will, after giving written notice to the Contractor, have the authority to cause defective Work to be remedied or removed and replaced, or to cause unauthorized Work to be removed and to deduct the cost thereof from any monies due or to become due the Contractor.

63. **DISPOSITION AND DISPOSAL OF MATERIALS:** All materials to be removed from the site including refuse and other debris shall become the property of the Contractor and shall be disposed of outside the limits of the Project. Contractor shall also comply with all applicable laws governing the spillage of debris while transporting to a disposal site.

64. **CLEAN-UP FOR FINAL ACCEPTANCE:** The Contractor shall make a final cleanup of all parts of the Work before acceptance by the Town of Addison. This cleanup shall include removal of all objectionable rock and other construction materials, and in general preparing the site of the Work in an orderly manner and appearance.

65. **TV INSPECTION OF SANITARY SEWER/STORM SEWER:** Part of the final inspection of the wastewater systems on this Project shall include a closed circuit TV survey of the completed pipe installation, exclusive of services, and all imperfections in the installed facility revealed by the TV survey shall be remedied by the Contractor prior to acceptance of the Project as complete. All TV survey Work, including furnishing of necessary personnel, equipment and material shall be performed by the Contractor.

66. **TESTING REQUIREMENTS:** Testing shall be conducted in accordance with Town of Addison Specifications except as modified in the Special Provisions, Technical Specifications, or as on the plans. The Town of Addison will provide random testing. The Contractor shall coordinate construction with the Town of Addison, and shall provide assistance to the testing labs by providing trench safety, excavation, or other work to insure all testing requirements are met. Work performed to accommodate testing will be a subsidiary item and no extra payment will be authorized. All retesting shall be at the expense of the Contractor. As a general guide, the Contractor shall be responsible for providing the following tests:

(1) Density and associated tests on embedment and backfill.
(2) Compressive strength tests on concrete.
(3) Gradation soil tests on backfill as may be required.
(4) Pressure test, bacteriological tests for disinfection of water lines,
(5) Mandrel test for gravity sewer pipeline
(6) Vacuum test for SSMH for water tightness.
(7) Providing test results from manufacturer and as specified in Town of Addison Specifications (NTCOG).

67. **SILICONE JOINT SEALANT:** Silicone joint sealant must be used in all instances where joint sealant applies to Portland Cement Concrete pavement and curbs. Payment for the

use of silicone joint throughout this Project will in all cases be subsidiary to this contract at no extra cost.

68. **CLAIMS FOR DAMAGES OR INJURY:** General Provision Item 1.24.3 - SMALL CLAIMS FOR DAMAGE OR INJURY is amended to read as follows: "If any person files a claim against the Town of Addison or Contractor for personal injury or property damage resulting from, arising out of, or caused by, the operations of the Contractor, or any Work within the limits of the Project, the Contractor must either submit to the Town of Addison, a duly executed full release within thirty (30) days from the date of written claim, or immediately report the claim to its liability insurance carrier for their action in adjusting the claim. If the Contractor fails to comply with this provision within the stipulated time limit, it will be automatically deemed that the Contractor has appointed the Town as it's irrevocably Attorney-In-Fact authorizing the Town to report the claim directly with the liability insurance carrier. This provision is in and of itself a Power-of-Attorney from the Contractor to the Town which authorizes the Town to take said action on behalf of the Contractor without the necessity of the execution of any other document. If the Contractor fails to comply with the provisions of this item the Town, at its own discretion, may terminate this contract or take any other actions it deems appropriate. Any payment or portion thereof due the Contractor, whether it is a final payment, progress payment, payment out of retainage or refund payment may be withheld by the Town as is authorized by Item 109.4. Bankruptcy, insolvency or denial of liability by the insurance carrier shall not exonerate the Contractor from liability.

As a result of the additional Work created to Town of Addison due to un-responded claims for damages by Contractor to third parties, Contractor shall incur penalties for failure to abide by this Special Provision.

Contractor shall respond to the claimant in writing regarding the status of the claim, including whether Contractor disputes the claim, wishes to settle, or will notify its liability insurance carrier regarding the claim. Contractor will be assessed a penalty by the Town of $75.00 per claim, for its failure to respond to the claimant as described above within thirty days of its written notice of claim by the Town.

To ensure Contractor compliance, the Town of Addison shall be notified, by copied correspondence of responses or settlement by Contractor."

69. **WAIVER OF CLAIMS:** The making and acceptance of final payment will constitute:

A. A waiver of all claims by Town of Addison against Contractor, except claims arising from unsettled Liens, from defective Work appearing after final inspection or failure to comply with the Contract Documents or the terms of any special guarantees specified therein; however, it will not constitute a waiver by Town of Addison of any rights in respect of Contractor's continuing obligations under the Contract Documents.

B. A waiver of all claims by Contractor against Town of Addison other than those previously made in writing and still unsettled.

70. **MECHANICS AND MATERIALMEN'S LIEN:** The Contractor shall be required to execute a release of mechanics and materialmen's liens upon receipt of payment and shall ensure that the Project remains free and clear of all liens related to the Work. The Contractor shall have all liens removed by obtaining releases acceptable to the Town of Addison or shall bond around such liens by obtaining a discharge of all liens.

71. **CONTRACTOR'S AFFIDAVIT OF BILLS PAID:** The Contractor shall be required to execute the form provided in Section BP prior to the acceptance of the Project.

72. **PRODUCT RECORD DOCUMENTS:** The Contractor shall maintain record Plans and legibly annotate shop drawings to record changes made after review. A red felt-tip marking pen shall be used for all recording.

Maintenance of Documents: The Contractor shall maintain at the job site one record copy of the Contract Plans, Specifications, Shop Drawings, Change Orders, other modification to the Contract, field test records and other documents submitted by Contractor in compliance with specification requirements. These documents shall be maintained at the job site apart from documents used for construction. These documents are not to be used for construction purposes. The documents shall be maintained in clean, legible condition. The documents shall be made available at all times for inspection by the Town.

Recording: Each document shall be labeled Project Record Copy in 2-inch high printed letters. The record documents shall be kept current. No Work shall be covered until required information has been recorded.

Contract Plans: The appropriate drawing shall be legibly marked to record, where applicable:

a. Horizontal and vertical location of underground utilities and appurtenances referenced to permanent surface improvements.

b. Field changes of dimension and detail made during construction process.

c. Changes made by Change Order or Supplemental Agreement.

d. Details not on original Contract Plans.

e. Manufacturer, trade name, catalog number and supplier of each product and item of equipment actually installed.

f. Changes made by Change Order or Supplemental Agreement.

g. Other matters not originally specified.

Shop Drawing: The Contractor shall maintain the Shop Drawings as record drawings and legibly annotate shop drawings to record changes made after review.

Submittal: At the completion of the Project, the Contractor shall deliver record Plans to the Town. The transmittal letter shall be accompanied, in duplicate, with:

a. Date, Project title and number.

b. Contractor's name and address.

c. Title and number of each record document.

d. Certification that each document as submitted is complete and accurate.

e. Signature of Contractor or its authorized representative.

73. **OWNERSHIP OF WORK AND MATERIALS:** All Work performed by Contractor pursuant to the Contract shall be the property of the Town of Addison. The Town of Addison shall own all construction, and any data, documents, plans, specifications, working papers, computer programs, photographs, or other material produced by Contractor pursuant to the Contract, and Contractor hereby assigns and transfers to the Town of Addison any and all copyrights for such material. To the extent that such programs used are internal, proprietary programs used by Contractor in the performance of the Work, Contractor will provide the Town of Addison such access to the programs as is necessary for the Town of Addison to be able to use the products and documents generated by the program, but Contractor is not required to transfer the copyrights or other intellectual property rights to the program to the Town of Addison. As security for partial, progress, or other payments, title to work for which such payments are made shall pass to the Town of Addison at the time of the payment. To the extent that title has not previously been vested in the Town of Addison by reason of payments, full title shall pass to the Town of Addison at delivery of the Work at the location specified in the Contract.

Unincorporated Work to which the Town of Addison has received title by reason of progress, partial or other payments shall be segregated from other Contractor or Subcontractor materials and clearly identified as the Town of Addison property. The Contractor shall be responsible for all materials until they have been incorporated into the Work and the Work has been finally accepted by the Town of Addison. The title transferred as above shall in each case be good, and free and clear of any and all security interests, liens, or other encumbrances. The Contractor promises and agrees that it will not pledge, hypothecate, or otherwise encumber the items in any way that would result in any lien, security interest, charge, or claim upon or against said items. The transfer of title as provided above shall not imply acceptance by the Town of Addison, nor relieve Contractor from the responsibility to strictly comply with the Contract, and shall not relieve Contractor of responsibility for any loss of or damage to such items.

The Contractor shall insert provisions in its subcontracts sufficient to ensure compliance with the content of this Section.

74. **DRAWINGS AND OTHER DATA:** All documents developed by Contractor in the performance of the Contract shall become the sole property of the Town of Addison and may be used by the Town of Addison on any other project without additional compensation

to Contractor. Use by the Town of Addison of these documents on other projects does not confer any liability on Contractor.

The Town of Addison shall be considered the "person for whom the work was prepared" for the purpose of authorship in any copyrightable work under 17 U.S.C. § 201(b). With respect thereto, Contractor agrees not to assert or authorize others to assert any rights or establish any claim under the design related patent and copyright laws. All design drawings, as-built drawings and specifications, in any form, shall contain a copyright mark of the Town of Addison.

75. **TOWN OF ADDISON APPROVAL:** This Project is subject to final approval and acceptance by the Town of Addison. Final approval acceptance will not be given until the punch list items are completed to the Town's satisfaction and as-built Plans are given to the Town of Addison.

76. **USE OF EXPLOSIVES:** The use of explosives by the Contractor to complete the Work shall be prohibited.

77. **POWER FOR CONSTRUCTION:** The Contractor shall contract with the local power provider and make the necessary arrangements for securing power required for the construction, including power required for temporary offices. There will be no separated pay item for connection into the existing power system or for the power required for construction purposes.

78. **LIQUIDATED DAMAGES:** If the Contractor fails to complete the Work within the time specified in the contract, the Contractor shall pay liquidated damages to the Town of Addison in the amount of **$ 1,000** for each calendar day of delay until the Work is completed or accepted.

79. **CONTRACT DELAY:** The parties anticipate that delays may be caused by or arise from any number of events during the course of the Contract, including, but not limited to, Work performed, disruptions, permitting issues, actions of subcontractors, suppliers, or other contractors, actions by third parties, weather, weekends, holidays, or other such events, forces or factors sometimes experienced in construction work. Such delays or events and their potential impacts on performance by the Contractor are specifically contemplated and acknowledged by the parties in entering into this Contract, and shall not extend the Contract time for completion. Further, any and all costs or impacts whatsoever incurred by the Contractor in accelerating the Work to overcome or absorb such delays or events in an effort to complete the Contract prior to expiration of the Contract time to complete, regardless of whether the Contractor does so or not, shall be the sole responsibility of the Contractor in every instance.

80. **SUBCONTRACTORS:** No subcontract shall relieve Contractor of any of Contractor's obligations or liabilities under the Contract. Contractor shall be fully responsible and liable for the acts or omissions of all Subcontractors, including persons directly or indirectly employed by them, their guests and invitees. Contractor shall have sole responsibility for managing and coordinating the operations of its Subcontractors, including the settlement

of disputes with or between them. Nothing contained in the Contract shall be deemed to create a contractual relationship between any Subcontractor, and the Town of Addison.

Contractor shall provide to the Town of Addison one (1) copy of all executed subcontracts associated with the Contract, including any changes or modifications to the subcontracts, within three (3) days of their execution. No Subcontractor shall be permitted to perform work associated with the subcontract until the Subcontractor (or Contractor on the Subcontractor's behalf) is in compliance with the insurance requirements specified elsewhere in the Contract, and has furnished satisfactory evidence of insurance to the Town of Addison.

81. **PAYMENTS TO SUBCONTRACTORS:** Contractor shall comply with the provisions of applicable laws and regulations relating to Contractor's relations with Subcontractors. Payments by Contractor to Subcontractors associated with the Town of Addison Contracts are subject to the time periods established in the Texas "Prompt Payment Act", contained in Chapter 2251 of the Texas Government Code.

All persons employed in the performance of the Work under the Contract, or any subcontracts hereunder, shall be paid not less than the general rates of per diem, holiday, and overtime wages prevailing in the locality of the Work of a similar character as detailed in the Special Provisions. Failure to comply with this provision shall subject Contractor to the penalties prescribed in Chapter 2258 of the Texas Government Code, as amended.

Contractor will include in each subcontract for property or services entered into by Contractor and a Subcontractor, including a supplier, for purposes of performing the Work under the Contract a payment clause that obligates Contractor to pay the Subcontractor for satisfactory performance under its subcontract within seven (7) days out of such amounts as are paid to Contractor by the Town of Addison under the Contract. A false certification to the Town of Addison under the provisions of the Payments clause may be a principal offense in violation of Section 37.10 of the Texas Penal Code.

82. **USE OF COMPLETED PORTIONS OF THE WORK:** Whenever, as determined by the Town of Addison, any portion of the Work performed by Contractor is in a condition suitable for use, and the best interests of the Town of Addison requires such use the Town of Addison may take possession of or use such portion of the Work. Such use by the Town of Addison shall in no case be construed as final acceptance, and shall neither relieve Contractor of any of its responsibilities under the Contract, nor act as a waiver by the Town of Addison of any of the conditions thereof. Contractor shall not be liable for the cost of repairs, rework, or renewals, which may be required due to ordinary wear and tear resulting from such use. However, if such use increases the cost or delays the completion of remaining portions of the Work, Contractor shall notify the Town of Addison in writing as required by the Contract and shall be entitled to such additional compensation or extension of time, or both, as determined in accordance with the Contract.

If in the course of such use, the Work proves to not be in compliance with the Contract, the Town of Addison shall have the right to continue such use until such portion of the Work can, without injury to the Town of Addison, be taken out of service for correction of

defects, errors, omissions, or replacement of unsatisfactory materials, as necessary for such portions of the Work to comply with the Contract. Contractor shall correct the Work as soon as practical, but not later than one (1) month after notification by the Town of Addison.

Contractor shall not use any permanently incorporated materials unless such use is approved in writing by the Town of Addison. Where Contractor's request is granted for the use of certain materials, Contractor shall properly use and maintain and, upon completion of its use and at its own expense, recondition such materials to the satisfaction of the Town of Addison.

83. **COMPLETE AGREEMENT:** The Contract (including Attachments, the Special Provisions, other documents and manuals incorporated herein) is the full and complete agreement between the Town of Addison and Contractor with respect to the subject matter herein and supersedes any and all prior agreements between the parties hereto.

84. **WAIVER:** The waiver by the Town of Addison of the breach of any provision of the Contract by Contractor shall in no way impair the right of the Town of Addison to enforce the provision for any subsequent breach thereof. All remedies provided hereunder are cumulative and are in addition to all other remedies available at law or in equity.

85. **EXECUTION OF THE CONTRACT:** The Contract may be executed in multiple counterparts, each of which shall, for all purposes, be deemed an original but which together shall constitute one and the same instrument, and the signature pages from any counterpart may be appended to any other counterpart to assemble fully executed documents, and counterparts of the Contract may also be exchanged via electronic facsimile machines and any electronic facsimile of any party's signature shall be deemed to be an original signature for all purposes.

86. **DEFINITIONS:** The following definitions are added to the General Provisions and Special Provisions:

**BIDDER**: Any person, persons, partnership, company, firm, association, or corporation acting directly or through a duly authorized representative submitting a bid for the work contemplated.

**PROJECT**: The Town of Addison's overall objective and endeavor of which the Contract forms a part and ultimately creates, which encompasses all Contact Documents constructed to final completion and final acceptance.

**TOWN ENGINEER (ENGINEER):** Town Engineer or his/her authorized representative with the Town of Addison located at 16801 Westgrove Drive, Addison, Texas 75001.

**CONSULTANT ENGINEER (DESIGN ENGINEER):** The consultant engineer of record is Brian J. LaFoy, PE (Texas Registered PE #89363 with Kimley-Horn and Associates, Inc. located at 2201 West Royal Lane, Suite 275, Irving, Texas 75063.

**WORKING DAY**: A working day is defined as a calendar day not including Saturdays, Sundays, or legal holidays authorized in the list prepared by the City of Dallas for contract purposes, in which weather or other conditions not under the control of the Contractor shall permit the performance of the principal units of work underway for a continuous period of not less than 7 hours between 7 A.M. and 6 PM. A principle unit of work shall be that unit which controls completion time of the contract. Nothing in this definition shall be construed as prohibiting the Contractor from working on Saturdays, if the Contractor so desires and permission of the Town of Addison has been granted. Work on Sundays shall not be permitted except in cases of extreme emergency and then only with the written permission of the Town of Addison. If Saturday or Sunday work is permitted, working time shall be charged on the same basis as weekdays. Where the working time is expressed as calendar days or a specific date, the concept of working days shall no longer be relevant to the contract.

87. **MODIFICATIONS TO THE LANGUAGE OF THE GENERAL PROVISIONS:** The General Provisions are modified as follows:

A. Add the following words to the General Provisions before the word "Certificates" found on the fourth line of Section 103.4.1:

"When permitted by law,"

B. Delete the sentence "A model Certificate of Insurance is illustrated in Model Form A.6 in Appendix A." beginning on the ninth line of Section 103.4.1 of the General Provisions and replace with the following:

"Certificates of Insurance shall be provided on a state approved form."

C. Delete the following sentence beginning on the second line of the fifth subparagraph of Section 104.2.1 of the General Provisions:

"The foregoing notwithstanding, the total original Contract amount shall not be increased more than 25 percent; the CONTRACTOR, by submission of a bid and execution of the Contract, is deemed to consent to the OWNER'S right to reduce the total original Contract amount by more than 25 percent."

D. Add the following word before the word "decide" found on the second line of Section 105.7.1 of the General Provisions:

"initially"

E. Add the following word after the word "work" found on the fifth line of Section 105.7.1 of the General Provisions:

", subject to the agreement of the Owner"

F. Delete the following sentence beginning on the sixth line of Section 105.7.1 of the General Provisions:

> "Engineer shall determine the amount and quality of work performed and materials furnished, and Engineer's decision and estimates shall be final."

G. Delete Section 105.9.3 of the General Provisions titled "Inspection Overtime" in its entirety.

H. Delete Section 107.2 of the General Provisions titled "Indemnification" in its entirety and replace with the following:

> **"THE CONTRACTOR AGREES TO INDEMNIFY, SAVE, PROTECT, DEFEND, AND HOLD HARMLESS THE OWNER, ITS AFFILIATES AND THEIR OFFICERS, DIRECTORS, AGENTS, INVITEES, AND EMPLOYEES ("INDEMNIFIED PARTIES") FROM AND AGAINST ANY AND ALL LIABILITY, COST, DAMAGE, EXPENSES, FINES AND ALL REASONABLE LEGAL FEES AND COURT COSTS, CLAIMS, LOSSES, CAUSES OF ACTION, SUITS, AND LIABILITY OF ANY KIND, INCLUDING ALL EXPENSES OF LITIGATION AGAINST THE INDEMNIFIED PARTIES, WHETHER OR NOT CAUSED IN PART BY ANY ACT OR OMISSION OF A PERSON OR ENTITY INDEMNIFIED HEREUNDER, OR WHETHER LIABILITY IS IMPOSED UPON SUCH PERSON OR ENTITY, FOR ANY LOSS, INJURY, DAMAGE OR DEATH ARISING FROM OR OUT OF THE CONTRACTOR'S ACTS OR OMISSIONS, INCLUDING, BUT NOT LIMITED TO CONTRACTOR'S NEGLIGENT OR GROSSLY NEGLIGENT PERFORMANCE OF THE WORK; NEGLIGENT OR GROSSLY NEGLIGENT USE OR MISUSE OF OWNER'S PROPERTY; NEGLIGENT OR INTENTIONAL ACTIONS, ERRORS OR OMISSIONS AND THOSE OF ITS EMPLOYEES, OFFICERS, DIRECTORS, AGENTS OR SUBCONTRACTORS; VIOLATION OF ANY FEDERAL, STATE OR MUNICIPAL LAWS, REGULATIONS AND/OR ORDINANCES; CONTRACTOR'S OR ITS SUBCONTRACTOR'S USE OF PROPERTY, EQUIPMENT, VEHICLES, OR MATERIALS; DEFECTIVE WORKMANSHIP; NEGLIGENT OR GROSSLY NEGLIGENT USE OR MISUSE OF UTILITIES; OR SUBCONTRACTORS', EMPLOYEES', AGENTS', OFFICERS', OR DIRECTORS' NEGLIGENCE OR INTENTIONAL TORTS. IT IS THE EXPRESS INTENT OF CONTRACTOR TO INDEMNIFY THE INDEMNIFIED**

**PARTIES FROM THE CONSEQUENCES OF THEIR JOINT AND/OR CONCURRENT NEGLIGENCE AND/OR SOLE NEGLIGENCE. IN THE EVENT OF FAILURE BY THE CONTRACTOR TO FULLY PERFORM IN ACCORDANCE WITH THIS INDEMNIFICATION PARAGRAPH, EACH OF THE INDEMNIFIED PARTIES, AT ITS OPTION, AND WITHOUT RELIEVING CONTRACTOR OF ITS OBLIGATIONS HEREUNDER, MAY SO PERFORM, BUT ALL COSTS AND EXPENSES SO INCURRED BY ANY OF THE INDEMNIFIED PARTIES IN THAT EVENT SHALL BE REIMBURSED BY CONTRACTOR TO THE INDEMNIFIED PARTIES, OR ANY OF THEM, AND UNTIL REIMBURSED BY CONTRACTOR SHALL BEAR INTEREST, AT THE RATE OF INTEREST PROVIDED TO BE PAID ON JUDGMENT UNDER THE LAWS OF THE STATE OF TEXAS. THIS INDEMNIFICATION SHALL NOT BE LIMITED TO DAMAGES, COMPENSATION OR BENEFITS PAYABLE UNDER INSURANCE POLICIES, WORKERS' COMPENSATION ACTS, DISABILITY BENEFIT ACTS OR OTHER EMPLOYEE BENEFIT ACTS.**

**IN THE EVENT THIS CONTRACT RELATES TO A PROJECT OTHER THAN A SINGLE FAMILY HOUSE, TOWNHOUSE, DUPLEX, OR LAND DEVELOPMENT DIRECTLY RELATED THERETO OR A PUBLIC WORKS PROJECT OF A MUNICIPALITY THEN THE INDEMNITY PROVISIONS INCLUDED HEREIN SHALL BE LIMITED SUCH THAT SUBCONTRACTOR SHALL NOT BE REQUIRED TO INDEMNIFY, HOLD HARMLESS OR DEFEND CONTRACTOR OR ANY THIRD PARTIES AGAINST A CLAIM CAUSED BY THE NEGLIGENCE OR FAULT, THE BREACH OR VIOLATION OF A STATUTE, ORDINANCE, GOVERNMENTAL REGULATION, STANDARD, OR RULE, OR THE BREACH OF CONTRACT OF AN INDEMNIFIED PARTY, ITS AGENT OR EMPLOYEE, OR ANY THIRD PARTY UNDER THE CONTROL OR SUPERVISION OF THE INDEMNIFIED PARTY, OTHER THAN SUBCONTRACTOR OR ITS AGENT, EMPLOYEE, OR SUBCONTRACTOR OF ANY TIER EXCEPT THAT SUBCONTRACTOR SHALL INDEMNIFY, HOLD HARMLESS AND DEFEND THE INDEMNIFIED PARTY AGAINST ANY CLAIMS FOR THE BODILY INJURY OR DEATH OF AN EMPLOYEE OF SUBCONTRACTOR, ITS AGENTS, OR ITS SUBCONTRACTORS OF ANY TIER.**

**NOTWITHSTANDING ANYTHING HEREIN TO THE CONTRARY, THE INDEMNITY PROVISIONS INCLUDED HEREIN SHALL BE LIMITED SUCH THAT CONTRACTOR SHALL NOT BE REQUIRED TO INDEMNIFY, HOLD HARMLESS OR DEFEND OWNER OR ANY THIRD PARTIES AGAINST A CLAIM CAUSED BY THE NEGLIGENCE OR FAULT, THE BREACH OR VIOLATION OF A STATUTE, ORDINANCE, GOVERNMENTAL REGULATION, STANDARD, OR RULE, OR THE BREACH OF CONTRACT OF THE INDEMNIFIED PARTIES, ITS AGENT OR EMPLOYEE, OR ANY THIRD PARTY UNDER THE CONTROL OR SUPERVISION OF THE INDEMNIFIED PARTIES, OTHER THAN CONTRACTOR OR ITS AGENT, EMPLOYEE, OR SUBCONTRACTOR OF ANY TIER EXCEPT THAT CONTRACTOR SHALL INDEMNIFY, HOLD HARMLESS AND DEFEND THE INDEMNIFIED PARTIES AGAINST ANY CLAIMS FOR THE BODILY INJURY OR DEATH OF AN EMPLOYEE OF CONTRACTOR, ITS AGENTS, OR ITS SUBCONTRACTORS OF ANY TIER."**

I. Add the following language after Section 103.3.1.4 of the General Provisions:

"**103.3.1.5. Maintenance Bond**. A good and sufficient bond in an amount not less than **100-percent** of the approximate total of the Contract, as evidenced by the proposed tabulation, or conditioned on the full and proper maintenance and repair of the Work to be done and performed for a period of one year from the date of final acceptance of the Work and the Contractor will do all necessary backfilling that may arise on account of sunken conditions in ditches, or otherwise, and do and perform the necessary Work and repair any defective condition growing out of or arising from the improper laying or construction of same, or on account of any breaking of same caused by the Contractor in construction of same, or on account of any defect arising in any of the Work laid or constructed by the Contractor or on account of improper excavation or backfilling, it being understood that the purpose of this Section is to cover all defective conditions arising by reason of defective materials, Work, or labor performed by the Contractor."

J. Add the following language after Section 104.2.5. of the General Provisions:

"**104.2.6. Change Orders**. A Change Order is a written instrument and signed by the Owner, Contractor and Engineer stating their agreement upon all of the following:

(1) the change in the Work;

(2) the amount of the adjustment, if any, in the Contract Sum; and

(3) the extent of the adjustment, if any, in the Contract Time.

In the event the Contractor proposes a Change Order, the Contractor shall provide sufficient detail for such Change Order to allow analysis and review by the Engineer.

Agreement on any Change Order shall constitute final agreement on the Work which is the subject of the Change Order, including, but not limited to, all direct and indirect costs associated with such change and any and all adjustments to the Contract Sum and the Contract Time. In the event a Change Order increases the Contract Sum, the Contractor shall include the Work covered by such Change Orders in Applications for Payment as if such Work were originally part of the Contract Documents.

The Contractor, upon receipt of written notification by the Owner or the Engineer of a proposed item or change in Work, shall prepare as soon as possible a Change Order on the form provided by the Owner. If the Change Order is returned to the Contractor for additional information or if the scope of the proposed change in the Work is modified by additions, deletions or other revisions, the Contractor shall revise the Change Order accordingly and resubmit the revised Change Order to the Owner and Engineer."

K. Delete the language in Section 105.2.1 of the General Provisions and replace it with the following language:

"**105.2.1. WORKMANSHIP**: If the OWNER notifies the CONTRACTOR in writing of defective work, the CONTRACTOR shall correct the deficiencies within five (5) calendar days of the Notice at no additional cost to the OWNER. If the defective work is not corrected within five (5) calendar days, or the CONTRACTOR is not making satisfactory progress (in the opinion of the OWNER) to correct the deficiencies, the OWNER may withhold future payments for All Work until the defective work has been corrected to the satisfaction of the OWNER."

L. Add the following language after Section 105.10 of the General Provisions:

"**105.10.2. GUARANTEE AFTER COMPLETION**: Unless otherwise specified in the technical section of these specifications, the CONTRACTOR shall, after test and acceptance, and for a period of one year from date of final written acceptance by the OWNER or within such longer or shorter period of time as may be prescribed by law or by the terms of any other applicable special warranty on designated equipment or portions of work as required by the Contract Documents, rebuild, repair, or replace any and all items

which have proven defective due to unsatisfactory material and/or workmanship. Upon written notice from the OWNER, the CONTRACTOR shall immediately make any repairs that may be ordered, or such repairs will be made by the Owner at the expense of the CONTRACTOR or the CONTRACTOR'S Surety. In case of an emergency where delay would cause serious loss or damage, the Owner may undertake to have the defects repaired without previous notice. The expense of all repairs, including all emergency repairs, shall be borne by the CONTRACTOR or the CONTRACTOR'S Surety, at no cost to the Owner. This obligation shall survive termination of the Contract.

**105.10.3. OFFSET PROGRESS PAYMENTS**: OWNER may, at its option, offset any progress payment or final payment under the Contract Documents against any debt (including taxes) lawfully due to OWNER from Contractor, regardless of whether the amount due arises pursuant to the terms of the Contract Documents or otherwise and regardless of whether or not the debt due to OWNER has been reduced to judgment by a court.

**105.10.4. FINAL ACCEPTANCE AND PAYMENT**: This Project is subject to final inspection and final acceptance by the Owner. Whenever the Work provided for by the Contract shall have been completely performed on the part of the CONTRACTOR, including, but not limited to compliance with North Central Texas Council of Governments Standard Specifications for Public Works Construction, October 2004 Section 202.6.4.6., the CONTRACTOR shall notify the OWNER that the Work is ready for final inspection. The OWNER will then make such final inspection and if the work is satisfactory and in accordance with the specifications and contract documents, the OWNER shall issue a certificate of acceptance to the CONTRACTOR and submit a request to accept the Work performed by the CONTRACTOR and payment of a final estimate under the terms of which the OWNER will release 100% of the retainage, plus the unpaid portions of the final estimate as the OWNER deems advisable.

Whenever the improvements provided for by the Contract shall have been completely performed on the part of the Contractor, as evidenced in the certificate of acceptance, and all required submissions provided to the OWNER, a final estimate showing the value of the Work shall be prepared by the OWNER as soon as the necessary measurements and computations can be made. All prior estimates upon which payments have been made are subject to necessary corrections or revisions in the final payment. The amount of this final estimate, less any sums that have been previously paid, deducted or retained under the provisions of the contract, shall be

paid the CONTRACTOR within 30 days after the final acceptance by the OWNER, provided the CONTRACTOR has furnished to the OWNER a consent of Surety and satisfactory evidence that all indebtedness connected with the Work and all sums of money due for any labor, materials, apparatus, fixtures, or machinery furnished for and used in the performance of the Work have been paid or otherwise satisfied, or that the person or persons to whom the same may respectively be due have consented to such final payment This requirement it not intended and shall not be construed to recognize subcontractors for the purpose of privity of contract, and no third party benefit rights shall be obtained through these provisions for final payment. The acceptance by the CONTRACTOR of the final payment as aforesaid shall operate as and shall be a release to the OWNER from all claims or liabilities under the Contract, including all subcontractor claims, for anything done or furnished or relating to the Work under the Contract or for any act or neglect of said OWNER relating to or connected with the Contract.

All warranties and guarantees shall commence from the date of the certificate of acceptance. No interest shall be due the CONTRACTOR on any partial or final payment, or on the retainage.

**105.10.5. RIGHT TO AUDIT CONTRACTOR'S RECORDS**: By execution of the Contract, CONTRACTOR grants the OWNER the right to audit, at Owner's election, all of CONTRACTOR'S records and billings relating to the performance of the Work under the Contract. CONTRACTOR agrees to retain such records for a minimum of three (3) years following completion of the Work under this Contract. OWNER agrees that it will exercise the right to audit only at reasonable hours."

M. Add the following language after Section 107.5 of the General Provisions:

"**107.5.1. COMPENSATION AND ACKNOWLEDGEMENT OF WORK**: The CONTRACTOR shall receive and accept compensation, as herein provided, as full payment for furnishing all labor, tools, material, equipment and incidentals; for performing all Work contemplated and embraced under the Contract; for all loss or damage arising out of the nature of the Work, or from the action of the elements; for any unforeseen defects or obstruction which may arise or be encountered during the prosecution of the Work and before its final acceptance by the OWNER; for all risks of whatever description connected with the prosecution of the Work; for all expense incurred by or in consequence of suspension or discontinuance of such prosecution of the Work as herein specified; for any infringement of patents, trademarks or copyrights; and for

completing the Work in an acceptable manner according to the Plans and Specifications."

N. Add the following language after Section 107.11 of the General Provisions:

"**107.11.1. COOPERATION OF THE CONTRACTOR**: The CONTRACTOR shall give to the work the consistent attention necessary to facilitate the progress thereof, and the CONTRACTOR shall cooperate with the OWNER, and with other CONTRACTORS in every way possible.

The OWNER and the OWNER'S representatives shall at all times have free access to the Work whenever it is in preparation or progress and the contractor shall provide safe, convenient and proper facilities for such access and inspection."

O. Delete Section 107.4 of the General Provisions and replace it with the following:

"**107.4. VENUE AND CHOICE OF LAW**

The Owner, the Contractor, and the Contractor's sureties agree that this Contract shall be performed in Dallas, Dallas County, Texas, and if legal action is necessary in connection therewith, exclusive venue shall lie in Dallas County, Texas. The terms and provisions of the Contract Documents shall be construed in accordance with the laws and court decisions of the State of Texas."

P. Delete the following language (which is the first paragraph) from Section 109.5.1. of the General Provisions:

"Between the 25th day and the last day of each month, the Owner shall make an approximate estimate of the value of the work done during the month under the specifications. Whenever the said estimate or estimates of work done since the last previous estimate exceeds $100 in amount, a percentage of such estimate sum shall be paid the Contractor on or before the 15th day of the month next following. The monthly estimate may include acceptable nonperishable materials delivered to the work; such payment shall be allowed on the same percentage basis of the net invoice value as provided hereinafter. The percent retained by the owner shall normally be up to 10 percent at completion, unless otherwise stated. At the midpoint, or at any subsequent time, if the owner determines that the progress of the Contract is satisfactory in all respects, it may at its discretion cease to retain additional funds until the completion of the project, or until progress ceases to be satisfactory. The owner shall make the sole determination in this matter."

Q. Add the following language after Section 109.5.1. of the General Provisions:

"**109.5.1.1. Applications for Payment.** Applications for progress payment ("Application for Payment") will be submitted no more often than monthly and shall be submitted on the dates set forth in the Agreement. Each Application for Payment shall be (1) sworn to and notarized, (2) supported by such data substantiating the Contractor's right to payment as the Owner or Engineer may require, such as copies of requisitions from Subcontractors and material suppliers, and reflecting retainage if provided for in the Contract Documents, and (3) submitted by the Contractor for review to the Engineer in form and substance as mandated by the Owner. The Contractor's Application for Payment shall be segregated and detailed in a manner satisfactory to the Owner.

In each Application for Payment, the Contractor shall certify that such Application for Payment represents a just estimate of portion of the Work that is complete as of the last day covered by the Application for Payment and shall also certify by sworn affidavit as follows:

> 'There are no known mechanics' or materialmen's liens outstanding at the date of this Application, all due and payable bills with respect to the Work have been paid to date or shall be paid from the proceeds of this Application for Payment, there is no known basis for filing of any mechanics' or materialmen's liens on the Work, and waivers from all subcontractors and materialmen have been or, at the time of payment, will be obtained in such form as to constitute an effective waiver of lien under the applicable laws of the State of Texas.'

**109.5.1.2. Lien Waivers.** Concurrent with each Application for Payment, the Contractor shall execute and furnish a waiver and release of its lien rights current through the effective date of such Application for Payment conditioned upon receipt of the payment that is the subject of the application. Beginning with the second Application for Payment, the Contractor shall also deliver with each such Application as a condition precedent to payment thereof, waivers of lien from each of the Subcontractors, Sub-subcontractors, and suppliers current through the effective date of the previous Application of Payment. The Contractor shall also execute and obtain any other reasonable forms as the Owner may require in order to assure an effective waiver and release of mechanics' and materialmen's liens in compliance with the laws of the State of Texas. The Contractor shall, if any Subcontractor, Sub-subcontractor or supplier refuses to furnish a release in full, furnish a bond satisfactory to the Owner to indemnify against any lien."

R. Delete Section 109.5.2 of the General Provisions and replace with the following:

"Ten-percent (10%) retainage shall be withheld until 40 days after Final Completion."

88. **CONTRACTOR REPRESENTATIONS:** By entering into the Contract, the Contractor makes the following representations to the Town of Addison:

A. Contractor has examined and carefully studied the Bidding Documents and the related data identified in the Bidding Documents.

B. The Contractor has visited the Project site where the goods are to be installed or services will be provided and become familiar with and is satisfied as to the observable local conditions that may affect cost, progress, or the furnishing of goods and services, if required to do so by the Bidding Documents, or if, in the Contractor's judgment, any local condition may affect cost, progress, or the furnishing of goods and services.

C. The Contractor is familiar with and is satisfied as to all Laws and Regulations in effect as of the date of the bid that may affect cost, progress, and the furnishing of goods and services.

D. The Contractor has carefully studied, considered, and correlated the information known to the Contractor; information commonly known to sellers of similar goods doing business in the locality of the Project site where the goods will be installed or where services will be provided; information and observations obtained from the Contractor's visits, if any, to the Project site where the goods will be installed or services will be provided; and any reports and drawings identified in the Bidding Documents regarding the Project site where the goods will be installed or where services will be provided, with respect to the effect of such information, observations, and documents on the cost, progress, and performance of the Contractor's obligations under the Bidding Documents.

E. The Contractor has given the Engineer written notice of all conflicts, errors, ambiguities, and discrepancies that the Contractor has discovered in the Bidding Documents, and the written resolution (if any) thereof by the Engineer is acceptable to the Contractor.

F. The Bidding Documents are generally sufficient to indicate and convey understanding of all terms and conditions for furnishing the goods and services for which the bid is submitted

G. The Contractor acknowledges that estimated quantities are not guaranteed and are solely for the purpose of comparison of bids, and final payment for all unit price bid items will be based on actual quantities, determined as provided in the Contract Documents. The Contractor also acknowledges that each unit price includes an amount considered by the Contractor to be adequate to cover the Contractor's overhead and profit for each separately identified item.

89. **PREVAILING WAGE RATES:** Wage rates paid on this Project shall not be less than specified in the schedule of general prevailing rates of per diem wages as set forth below in the Davis Bacon Act General Decision No. TX130035:

General Decision Number: TX20210025 01/01/2021

Superseded General Decision Number: TX20200025

State: Texas

Construction Type: Highway

Counties: Archer, Callahan, Clay, Collin, Dallas, Delta,
Denton, Ellis, Grayson, Hunt, Johnson, Jones, Kaufman, Parker,
Rockwall, Tarrant and Wise Counties in Texas.

HIGHWAY CONSTRUCTION PROJECTS (excluding tunnels, building
structures in rest area projects & railroad construction;
bascule, suspension & spandrel arch bridges designed for
commercial navigation, bridges involving marine construction;
and other major bridges).

Note: Under Executive Order (EO) 13658, an hourly minimum wage of $10.95 for calendar year 2021 applies to all contracts subject to the Davis-Bacon Act for which the contract is awarded (and any solicitation was issued) on or after January 1, 2015. If this contract is covered by the EO, the contractor must pay all workers in any classification listed on this wage determination at least $10.95 per hour (or the applicable wage rate listed on this wage determination, if it is higher) for all hours spent performing on the contract in calendar year 2021. If this contract is covered by the EO and a classification considered necessary for performance of work on the contract does not appear on this wage determination, the contractor must pay workers in that classification at least the wage rate determined through the conformance process set forth in 29 CFR 5.5(a)(1)(ii) (or the EO minimum wage rate, if it is higher than the conformed wage rate). The EO minimum wage rate will be adjusted annually. Please note that this EO applies to the above-mentioned types of contracts entered into by the federal government that are subject to the Davis-Bacon Act itself, but it does not apply to contracts subject only to the Davis-Bacon Related Acts, including those set forth at 29 CFR 5.1(a)(2)-(60). Additional information on contractor requirements and worker protections under the EO is available at www.dol.gov/whd/govcontracts.

**BELLA LANE SOUTH EXTENSTION & ALPHA ROAD CONNECTOR**

Modification Number Publication Date

0 01/01/2021

* SUTX2011-007 08/03/2011

Rates Fringes

CONCRETE FINISHER (Paving and

Structures).....$ 14.12

ELECTRICIAN.....$ 19.80

FORM BUILDER/FORM SETTER

Paving & Curb.....$ 13.16

Structures.....$ 13.84

LABORER

Asphalt Raker.....$ 12.69

Flagger.....$ 10.06

Laborer, Common.....$ 10.72

Laborer, Utility.....$ 12.32

Pipelayer.....$ 13.24

Work Zone Barricade

Servicer.....$ 11.68

POWER EQUIPMENT OPERATOR:

Asphalt Distributor.....$ 15.32

Asphalt Paving Machine.....$ 13.99

Broom or Sweeper.....$ 11.74

Concrete Pavement

Finishing Machine.....$ 16.05

Concrete Saw.....$ 14.48

Crane Operator, Lattice

Boom 80 Tons or Less.....$ 17.27

Crane Operator, Lattice

Boom over 80 Tons.....$ 20.52

Crane, Hydraulic 80 Tons

or Less.....$ 18.12

Crawler Tractor.....$ 14.07

Excavator, 50,000 pounds

or less.....$ 17.19

Excavator, over 50,000

pounds.....$ 16.99

Foundation Drill , Truck

Mounted.....$ 21.07

Foundation Drill, Crawler

Mounted.....$ 17.99

Front End Loader 3 CY or

Less.....$ 13.69

Front End Loader, over 3 CY.$ 14.72

Loader/Backhoe.....$ 15.18

Mechanic.....$ 17.68

Milling Machine.....$ 14.32

Motor Grader, Fine Grade....$ 17.19

Motor Grader, Rough.....$ 16.02

Pavement Marking Machine....$ 13.63

Reclaimer/Pulverizer.....$ 11.01

Roller, Asphalt.....$ 13.08

Roller, Other.....$ 11.51

Scraper.....$ 12.96

Small Slipform Machine.....$ 15.96

Spreader Box.....$ 14.73

Servicer.....$ 14.58

Steel Worker (Reinforcing).....$ 16.18

TRUCK DRIVER

Lowboy-Float.....$ 16.24

Off Road Hauler.....$ 12.25

Single Axle.....$ 12.31

Single or Tandem Axle Dump

Truck.....$ 12.62

Tandem Axle Tractor with

Semi Trailer.....$ 12.86

Transit-Mix.....$ 14.14

WELDER.....$ 14.84

---

WELDERS - Receive rate prescribed for craft performing operation to which welding is incidental.

==========

Note: Executive Order (EO) 13706, Establishing Paid Sick Leave for Federal Contractors applies to all contracts subject to the Davis-Bacon Act for which the contract is awarded (and any solicitation was issued) on or after January 1, 2017. If this contract is covered by the EO, the contractor must provide employees with 1 hour of paid sick leave for every 30 hours they work, up to 56 hours of paid sick leave each year. Employees must be permitted to use paid sick leave for their own illness, injury or other health-related needs, including preventive care; to assist a family member (or person who is

like family to the employee) who is ill, injured, or has other health-related needs, including preventive care; or for reasons resulting from, or to assist a family member (or person who is like family to the employee) who is a victim of, domestic violence, sexual assault, or stalking. Additional information on contractor requirements and worker protections under the EO is available at www.dol.gov/whd/govcontracts.

Unlisted classifications needed for work not included within the scope of the classifications listed may be added after award only as provided in the labor standards contract clauses (29CFR 5.5 (a) (1) (ii)).

---

The body of each wage determination lists the classification and wage rates that have been found to be prevailing for the cited type(s) of construction in the area covered by the wage determination. The classifications are listed in alphabetical order of ""identifiers"" that indicate whether the particular rate is a union rate (current union negotiated rate for local), a survey rate (weighted average rate) or a union average rate (weighted union average rate).

Union Rate Identifiers

A four letter classification abbreviation identifier enclosed in dotted lines beginning with characters other than ""SU"" or ""UAVG"" denotes that the union classification and rate were prevailing for that classification in the survey. Example: PLUM0198-005 07/01/2014. PLUM is an abbreviation identifier of the union which prevailed in the survey for this classification, which in this example would be Plumbers. 0198 indicates the local union number or district council number where applicable, i.e., Plumbers Local 0198. The next number, 005 in the example, is an internal number used in processing the wage determination. 07/01/2014 is the effective date of the most current negotiated rate, which in this example is July 1, 2014.

Union prevailing wage rates are updated to reflect all rate changes in the collective bargaining agreement (CBA) governing this classification and rate.

Survey Rate Identifiers

Classifications listed under the ""SU"" identifier indicate that no one rate prevailed for this classification in the survey and

the published rate is derived by computing a weighted average rate based on all the rates reported in the survey for that classification. As this weighted average rate includes all rates reported in the survey, it may include both union and non-union rates. Example: SULA2012-007 5/13/2014. SU indicates the rates are survey rates based on a weighted average calculation of rates and are not majority rates. LA indicates the State of Louisiana. 2012 is the year of survey on which these classifications and rates are based. The next number, 007 in the example, is an internal number used in producing the wage determination. 5/13/2014 indicates the survey completion date for the classifications and rates under that identifier.

Survey wage rates are not updated and remain in effect until a new survey is conducted.

Union Average Rate Identifiers

Classification(s) listed under the UAVG identifier indicate that no single majority rate prevailed for those classifications; however, 100% of the data reported for the classifications was union data. EXAMPLE: UAVG-OH-0010 08/29/2014. UAVG indicates that the rate is a weighted union average rate. OH indicates the state. The next number, 0010 in the example, is an internal number used in producing the wage

determination. 08/29/2014 indicates the survey completion date for the classifications and rates under that identifier.

A UAVG rate will be updated once a year, usually in January of each year, to reflect a weighted average of the current negotiated/CBA rate of the union locals from which the rate is based.

---

WAGE DETERMINATION APPEALS PROCESS

1.) Has there been an initial decision in the matter? This can be:

* an existing published wage determination
* a survey underlying a wage determination
* a Wage and Hour Division letter setting forth a position on a wage determination matter
* a conformance (additional classification and rate) ruling

On survey related matters, initial contact, including requests for summaries of surveys, should be with the Wage and Hour

Regional Office for the area in which the survey was conducted because those Regional Offices have responsibility for the Davis-Bacon survey program. If the response from this initial contact is not satisfactory, then the process described in 2.) and 3.) should be followed.

With regard to any other matter not yet ripe for the formal process described here, initial contact should be with the Branch of Construction Wage Determinations. Write to:

Branch of Construction Wage Determinations
Wage and Hour Division
U.S. Department of Labor
200 Constitution Avenue, N.W.
Washington, DC 20210

2.) If the answer to the question in 1.) is yes, then an interested party (those affected by the action) can request review and reconsideration from the Wage and Hour Administrator (See 29 CFR Part 1.8 and 29 CFR Part 7). Write to:

Wage and Hour Administrator
U.S. Department of Labor
200 Constitution Avenue, N.W.
Washington, DC 20210

The request should be accompanied by a full statement of the interested party's position and by any information (wage payment data, project description, area practice material, etc.) that the requestor considers relevant to the issue.

3.) If the decision of the Administrator is not favorable, an interested party may appeal directly to the Administrative Review Board (formerly the Wage Appeals Board). Write to:

Administrative Review Board
U.S. Department of Labor
200 Constitution Avenue, N.W.
Washington, DC 20210

4.) All decisions by the Administrative Review Board are final.

==========

END OF GENERAL DECISION

**90.** **NO BOYCOTT ISREAL:** Pursuant to Texas Government Code Chapter 2270, Contractor's execution of this Agreement shall serve as verification that the Contractor does not presently boycott Israel and will not boycott Israel during the term of this Agreement.

END OF GENERAL DECISION

**SECTION PS**

# PROJECT SIGN

# PROJECT SIGN

## 1. Quantity

**Two (2)** Project Designation signs will be constructed and installed on the project site as directed by the Owner. It will be the responsibility of the Contractor to maintain the sign in a presentable condition at all times during construction. Maintenance will include painting and repairs as directed by the City Engineer or his appointee. The locations of the signs will be given to the Contractor by the Town of Addison at the Pre-Construction Conference.

## 2. Material

Sign shall be constructed of ¾-inch thick smooth finish fir plywood (Grade A-C, exterior or better).

Sign will be securely mounted to 6" x 6" square posts. Nuts and bolts will not protrude from face of sign. Posts will be mounted to a support system that will provide adequate stabilization to ensure the sign will not fall over in heavy winds. Sand bags or other techniques may be necessary to protect sign.

## 3. Dimensions

Size of sign will be four feet tall and six feet wide. The height and arrangement of the lettering shall be in accordance with the attached detail.

## 4. Paint

Sign will be one-sided and will have a white background. Text will be black, except for the word "Addison!" which will be a blue color approved by the City Engineer. The paint will be an outdoor paint and will be maintained throughout the project in proper order. The quality of the paint, painting, and lettering on the signs shall be approved by the City Engineer or his appointee.

## 5. Payment

Project Signs will be a separate pay item. This will include all labor, equipment, tools, and incidentals necessary to complete and install the work.

The Town of 


# PLEASE PARDON THE TEMPORARY INCONVENIENCE DURING THIS PROJECT

# "PROJECT NAME"

CONTRACTOR: _____

ESTIMATED COMPLETION DATE: XXX

**AN ADDISON PROJECT**

**FOR MORE INFORMATION, PLEASE CALL (972) 450-2871**

# Special Specification 7076
# Grouting of Water Mains

## 1. DESCRIPTION

This item will govern the grouting of existing water mains for the purposes of abandonment underneath roadways, paved areas, and at other designated locations. The location of this Work is as shown on the Contract Document plans and/or as encountered in the field during construction. The Contractor will, unless otherwise specified, furnish all labor, materials, equipment, tools and all other appurtenances necessary to abandon water lines segments in place by filling them with flowable cementious low strength grout including plugs, bulkheads, excavation and backfill at locations as required to completely fill the line to be abandoned in place with grout to protect against future collapse of the line.

## 2. SUBMITTALS

A. Proposed Mix Design Report

B. Submit manufacturers data for proposed plugs and detail of bulkhead

C. Technical information for equipment and operations procedures including projected injection rate, grout pressure, method of controlling grout pressure, bulkhead and vent design and number of stages of grout application.

D. Submit project specific plan for abandonment at least 15 days prior to commencing grouting activities, describe proposed sequence and other information pertinent to completion of Work.

## 3. MATERIALS

A. Cement-based grout/ flowable fill with self-leveling and non-shrink characteristics.

B. Unconfined compressive strength: Minimum 100 psi at 56 days as determined based on average of three tests for same placement. Present at least three acceptable strength tests for proposed mix design in mix design report.

## 4. CONSTRUCTION

Abandoning and grouting of water lines must not occur until all existing water mains and services have been transferred to a relocated water line or another line as designated in the Contract Documents. The Contractor will be responsible for the satisfactory coordination of the pipe abandonments with other construction and activities in the area. Delays in work resulting from lack of coordination will not be cause for additional compensation. Any work involving or impacting asbestos concrete pipe must be in accordance with the procedures outlined in the approved specifications for this project and will comply with all federal, state, and local laws, ordinances and regulations regarding the management of asbestos containing materials.

Remove all water line appurtenances, such as hydrants, valves and valve casing and castings. These appurtenances must be returned to the designated utility representative.

Make cuts, install bulkheads, vents to allow for air release

Remove any free standing water prior to starting fill placement.

Place grout/flowable fill using concrete or grout pumps capable of continuous delivery at planned placement rate to fill volume between placement points not to exceed 500 linear ft. at a time. Pump flowable fill through bulkheads constructed for placement of PVC pipes or other methods to contain grout in line to be abandoned. These pipe will be used for injection points or vents during placement. Place grout under pressure into property vented open system until grout emerges from vent pipes indicating pipe is completely filled. Pumping grout must be completed under sufficient pressure to overcome friction and to fill water main from downstream to upstream end. Remediate areas where flowable fill did not fill voids in water main by pressure grouting from inside water main or from surface if necessary. Plug each end of the water main being abandoned. Ensure that concrete is around plug/bulkhead and around pipe including bedding area such that it is not penetrable by groundwater and that bedding at this location is not a conduit for groundwater. The method of installation must be able to meet the requirement of completely filling the existing water main and any voids adjacent to it.

Backfill to grade above pipe left in place. Place and compact backfill in compliance with the Special Specifications.

Remove, transport, and, dispose of spoils. Spoils including pipe must be hauled to a facility permitted to accept the material. The method must provide for the release of air. When intermediate points are required to be constructed for the abandonment of the system, they must be a part of the abandonment project process. The method must provide for the isolation of water mains to be grouted from water mains that are abandoned in place without grouting as shown on the plans.

Water mains that are not under proposed pavement are generally not required to be grouted unless it is specified in the contract documents. Mains to be abandoned must be grouted only if required by the contract documents and payment as per these specifications is provided.

## 5. MEASUREMENT

This Item will be measured by the linear foot of water main to be abandoned regardless of depth.

## 6. PAYMENT

The work performed and materials furnished in accordance with this Item and measured as provided under "Measurement" will be paid for at the unit price bid for "Grout Abandonment Water Main of the size of water main specified. This price will be full compensation for the removing of the content within the pipe, cleaning, grouting, plugging, capping and abandoning all pipe, pipe bend section and all other appurtenance, and of dewatering, trenching, excavation and backfill, removal, transportation and disposal and all material or work necessary to properly abandon the pipe and must include all materials, labor, equipment, tools and incidentals necessary to complete the work.

## SECTION TS

# TECHNICAL SPECIFICATIONS

**STANDARD SPECIFICATIONS FOR PUBLIC WORKS CONSTRUCTION (North Central Texas) - Fifth Edition 2017**

For this project, the Standard Specifications for Public Works Construction, North Central Texas, as prepared by the North Central Texas Council of Governments, and Town of Addison Standard Construction Details, shall govern all work to be done, together with any additional Technical Specifications included herein.

The following is a listing of technical specification sections that are anticipated for use on this project.

| | |
|---|---|
| Site Protection & Preparation | Division 200 |
| Roadway Construction | Division 300 |
| Roadway Maintenance & Rehabilitation | Division 400 |
| Underground Construction | Division 500 |
| Conduit & Appurtenance Rehabilitation | Division 600 |
| Structures | Division 700 |
| Misc. Construction & Materials | Division 800 |

**TXDOT STANDARD SPECIFICATION**

The Texas Department of Transportation Standard Specifications for Construction and Maintenance of Highways, Streets, and Bridges Adopted by the Texas Department of Transportation November 1, 2014 are included in the contract by reference and are available as a separate document from TxDOT at the following link: https://www.txdot.gov/business/resources/txdot-specifications.html)

The following is a listing of technical specifications that are anticipated for use on this project.

| | |
|---|---|
| Item 340 | Dense-Graded Hot-Mix Asphalt (Small Quantity) |
| Item 401 | Flowable Fill |
| Item 416 | Drilled Shaft Foundations |
| Item 420 | Concrete Substructures |
| Item 422 | Concrete Superstructures |
| Item 425 | Precast Prestressed Concrete Structural Members |
| Item 432 | Riprap |
| Item 434 | Bridge Bearings |
| Item 442 | Metals for Structures |
| Item 450 | Railing |
| Item 454 | Bridge Expansion Joints |
| Item 462 | Concrete Box Culverts and Drains |
| Item 464 | Reinforced Concrete Pipe |

| | |
|---|---|
| Item 466 | Headwall and Wingwall |
| Item 467 | Safety End Treatment |
| Item 531 | Sidewalks |
| Item 540 | Metal Beam Guard Fence |
| Item 644 | Small Roadside Sign Assemblies |
| Item 666 | Retroreflectorized Pavement Markings |

The following is a listing of special specifications that are anticipated for use on this project.

| | |
|---|---|
| SS7076 | Grouting of Water Mains |

**SECTION IS**

# ADDITIONAL INSURANCE REQUIREMENTS

**TOWN OF ADDISON, TEXAS**
**ADDISON AIRPORT NORTHWEST DRAINAGE DITCH IMPROVEMENTS**

**REQUIREMENTS**

Contractors performing work on TOWN OF ADDISON property or public right-of-way shall provide the TOWN OF ADDISON a certificate of insurance or a copy of their insurance policy(s) (and including a copy of the endorsements necessary to meet the requirements and instructions contained herein) evidencing the coverages and coverage provisions identified herein within ten (10) days of request from TOWN OF ADDISON. Contractors shall provide TOWN OF ADDISON evidence that all subcontractors performing work on the project have the same types and amounts of coverages as required herein or that the subcontractors are included under the contractor's policy. Work shall not commence until insurance has been approved by TOWN OF ADDISON.

All insurance companies and coverages must be authorized by the Texas Department of Insurance to transact business in the State of Texas and must have a A.M. Best's rating A-:VII or greater.

Listed below are the types and minimum amounts of insurances required and which must be maintained during the term of the contract. TOWN OF ADDISON reserves the right to amend or require additional types and amounts of coverages or provisions depending on the nature of the work.

| TYPE OF INSURANCE | AMOUNT OF INSURANCE | PROVISIONS |
|---|---|---|
| 1. **Workers' Compensation Employers' Liability** to include:<br>(a) each accident<br>(b) Disease Policy Limits<br>(c) Disease each employee | Statutory Limits per occurrence<br><br>Each accident $1,000,000<br>Disease Policy Limits $1,000,000<br>Disease each employee$1,000,000 | **TOWN OF ADDISON, and Cobb, Fendley & Associates, Inc. to be provided a *WAIVER OF SUBROGATION AND 30 DAY NOTICE OF CANCELLATION or* material change in coverage.**<br>**Insurance company must be A-:VII rated or above.** |
| 2. **Commercial General (Public) Liability** to include coverage for:<br>a) Bodily Injury<br>b) Property damage<br>c) Independent Contractors<br>d) Personal Injury<br>e) Contractual Liability | Bodily Injury/Property Damage per occurrence $1,000,000, General Aggregate $2,000,000 Products/Completed Aggregate $2,000,000, Personal Advertising Injury per occurrence $1,000,000, Medical Expense 5,000 | **TOWN OF ADDISON, and Cobb, Fendley & Associates, Inc. *to be listed as ADDITIONAL INSURED and provided 30 DAY NOTICE OF CANCELLATION* or material change in coverage.**<br>**Insurance company must be A-:VII rated or above.** |
| 3. **Business Auto Liability** to include coverage for:<br>a) Owned/Leased vehicles<br>b) Non-owned vehicles<br>c) Hired vehicles | Combined Single Limit $1,000,000 per occurrence for bodily injury and property damage | **TOWN OF ADDISON, and Cobb, Fendley & Associates, Inc. *to be listed as ADDITIONAL INSURED and provided 30 DAY NOTICE OF CANCELLATION* or material change in coverage.**<br>**Insurance company must be A:VII-rated or above.** |
| 4. **Umbrella or Excess Liability Policy over Commercial General Liability and Automobile Liability limits of $1 million per occurrence** | Minimum $4 million per occurrence excess $1 million underlying per occurrence | **TOWN OF ADDISON, and Cobb, Fendley & Associates, Inc. *to be listed as ADDITIONAL INSURED and provided 30 DAY NOTICE OF CANCELLATION* or material change in coverage.**<br>**Insurance company must be A:VII-rated or above.** |

Certificate of Liability Insurance forms (together with the endorsements necessary to meet the requirements and instructions contained herein)may be **faxed** to the Purchasing Department: **972-450-7074 or emailed to: purchasing@addisontx.gov.** Questions regarding required insurance should be directed to the Purchasing Manager.

With respect to the foregoing insurance,

1. All liability policies shall contain no cross liability exclusions or insured versus insured restrictions applicable to the claims of the Town of Addison.

2. All insurance policies shall be endorsed to require the insurer to immediately notify the Town of Addison, Texas of any material change in the insurance coverage.

3. All insurance policies shall be endorsed to the effect that the Town of Addison, Texas will receive at least thirty (30) days' notice prior to cancellation or non-renewal of the insurance.

4. All insurance policies, which name the Town of Addison and Kimley-Horn and Associates, Inc. as an additional insured, must be endorsed to read as primary coverage regardless of the application of other insurance.

5. Insurance must be purchased from insurers that are financially acceptable to the Town of Addison and licensed to do business in the State of Texas.

All insurance must be written on forms filed with and approved by the Texas Department of Insurance. Upon request, Contractor shall furnish the Town of Addison with complete copies of all insurance policies certified to be true and correct by the insurance carrier.

This form must be signed and returned with your quotation. You are stating that you do have the required insurance and if selected to perform work for TOWN OF ADDISON, will provide the certificates of insurance (and endorsements) with the above requirements to TOWN OF ADDISON within 10 working days.

**A CONTRACT/PURCHASE ORDER WILL NOT BE ISSUED WITHOUT EVIDENCE AND APPROVAL OF INSURANCE.**

**AGREEMENT**

I agree to provide the above described insurance coverages within 10 working days if selected to perform work for TOWN OF ADDISON. I also agree to require any subcontractor(s) to maintain insurance coverage equal to that required by the Contractor. It is the responsibility of the Contractor to assure compliance with this provision. The Town accepts no responsibility arising from the conduct, or lack of conduct, of the Subcontractor.

**Project/Bid#**_____

**Company:**_____

**Printed Name:** _____

**Signature:**_____ **Date:** _____

**APPENDIX A**

# GEOTECHNICAL STUDY

# GEOTECHNICAL STUDY

## Alpha Road Connector – Vitruvian Phase IV
### Farmers Branch, Texas

20212439.001A
December 2, 2020
Revision No. 1: July 15, 2021


© 2021 Kleinfelder


7805 Mesquite Bend Dr., Suite 100, Irving, TX 75063 p | 972.868.5009 f | 972.409.0008

KLEINFELDER
Bright People. Right Solutions.

December 2, 2020
Revision No. 1: July 15, 2021
20212439.001A

Kimley-Horn & Associates, Inc.
2201 West Royal Lane, Suite 275
Irving, Texas 75063

Attention: Mr. Brian LaFoy, PE

**Subject:** **Geotechnical Study**
**Alpha Road Connector – Vitruvian Phase IV**
**Brookhaven Community College**
**Farmers Branch, Texas**

Dear Mr. LaFoy:

This report transmits the findings of our geotechnical study for the proposed Alpha Road Connector in Farmers Branch, Texas. The results of the field and laboratory work are included along with engineering recommendations for use during the design and construction of the project.

We appreciate the opportunity to be of service to you on this project. If we can be of additional assistance as the design progresses, please contact us at 972.868.5900.

Sincerely,

**KLEINFELDER, INC.**
Texas Registered Engineering Firm F-16438

Richard J. Hammerberg, PE
Senior Project Manager

Sri Dinakaran, PE, DGE, DBIA
Senior Program Manager

Copies Submitted: 1 electronic copy & 1 copy via mail


© 2021 Kleinfelder

7805 Mesquite Bend Dr., Suite 100, Irving, TX 75063 p | 972.868.5009 f | 972.409.0008

A Report Prepared for:

**Kimley Horn & Associates**
2201 West Royal Lane, Suite 275
Irving, Texas 75063

**GEOTECHNICAL STUDY**
**Alpha Road Connector – Vitruvian Phase IV**
**Farmers Branch, Texas**

20212439.001A
December 2, 2020
Revision No. 1: July 15, 2021

Prepared by:

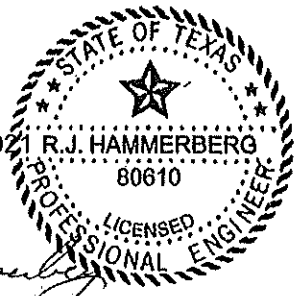


Richard J. Hammerberg, PE
Senior Project Manager

Sri Dinakaran, PE, DGE, DBIA
Senior Program Manager

KLEINFELDER
Bright People. Right Solutions.

7805 Mesquite Bend Drive, Suite 100
Irving, Texas 75063
p| 972.868.5900
f | 972.409.0008

This document was prepared for use only by the client, only for the purposes stated, and within a reasonable time from issuance, but in no event later than one year from the date of the report. Non-commercial, educational, and scientific use of this report by regulatory agencies is regarded as a "fair use" and not a violation of copyright. Regulatory agencies may make additional copies of this document for internal use. Copies may also be made available to the public as required by law. The reprint must acknowledge the copyright and indicate that permission to reprint has been received.

# TABLE OF CONTENTS


| SECTION | | | PAGE |
|---|---|---|---|
| 1 | **INTRODUCTION** | | 1 |
| | 1.1 | PROJECT DESCRIPTION | 1 |
| | 1.2 | SITE DESCRIPTION | 1 |
| | 1.3 | PURPOSE AND SCOPE | 2 |
| 2 | **FIELD EXPLORATION AND LABORATORY TESTING** | | 3 |
| | 2.1 | FIELD EXPLORATION | 3 |
| | 2.2 | LABORATORY TESTING | 5 |
| 3 | **SUBSURFACE CONDITIONS** | | 6 |
| | 3.1 | GEOLOGY | 6 |
| | 3.2 | STRATIGRAPHY | 6 |
| | 3.3 | GROUNDWATER OBSERVATIONS | 7 |
| | 3.4 | EXPANSIVE SOIL CHARACTERISTICS | 7 |
| 4 | **ANALYSIS AND RECOMMENDATIONS** | | 10 |
| | 4.1 | BRIDGE STRUCTURE | 10 |
| | | 4.1.1 Drilled Shaft Foundations | 10 |
| | | 4.1.2 Drilled Shaft Construction Considerations | 11 |
| | | 4.1.3 LPILE Parameters (version 2019) for Soil and Rock | 12 |
| | | 4.1.4 Soluble Sulfates | 13 |
| | 4.2 | PAVEMENT RECOMMENDATIONS | 14 |
| | | 4.2.1 Pavement Thickness | 14 |
| | | 4.2.2 Pavement Subgrade Preparation | 16 |
| | | 4.2.3 Pavement Material Specifications | 16 |
| | 4.3 | ADDITIONAL DESIGN CONSIDERATIONS | 17 |
| | | 4.3.1 Box Culvert | 17 |
| | | 4.3.2 Wall Structures | 17 |
| | | 4.3.3 Wall Outfall | 17 |
| | | 4.3.4 Lateral Earth Pressures | 18 |
| | | 4.3.5 2018 IBC Seismic Design Parameters | 19 |
| | | 4.3.6 Utility and Service Lines | 20 |
| | | 4.3.7 Detention Pond Slopes | 20 |
| 5 | **EARTHWORK** | | 21 |
| | 5.1 | SITE PREPARATION | 21 |
| | 5.2 | MATERIAL REQUIREMENTS AND TESTING | 21 |
| 6 | **LIMITATIONS** | | 23 |

**FIGURES**

Figure 1 Exploration Location Plan and Vicinity Map

**APPENDICES**

Appendix A ..... Field Explorations

Appendix B ..... Laboratory Testing




© 2021 Kleinfelder




7805 Mesquite Bend Dr., Suite 100, Irving, TX 75063 p | 972.868.5009 f | 972.409.0008

# GEOTECHNICAL STUDY
# ALPHA ROAD CONNECTOR – VITRUVIAN PHASE IV
# FARMERS BRANCH, TEXAS

## 1 INTRODUCTION

### 1.1 PROJECT DESCRIPTION

This report presents the results of the geotechnical study for the proposed Alpha Road Connector in Farmers Branch, Texas. We understand that the project is planned to link Alpha Road and Bella Road to the Brookhaven Community College and to the master-planned Vitruvian community. Currently, Brookhaven Community College has one point of ingress and egress. The proposed project will increase the ingress and egress points to three and improve the traffic mobility to the college.

Geotechnical information was originally requested to provide design level recommendations for the proposed pavements, culverts, and for the three-span bridge along with its associated walls and embankments. A draft report dated January 30, 2014, was submitted to the Town of Addison under our Project No. 137422. Shortly thereafter, the project was suspended, thus a sealed report was never issued. The project has since been reinstated and assigned to Kimley Horn & Associates (KHA) who requested additional geotechnical work for a detention pond. We understand that the design of the entire project will be performed by KHA (), and that the bridge structure will be designed in accordance with the Texas Department of Transportation (TxDOT) bridge design standards. We understand that retaining walls and embankments will not be constructed as part of the approaches to the aforementioned bridge. A detention pond is planned along the southern portion of the road and slope recommendations have been requested.

### 1.2 SITE DESCRIPTION

The Alpha Road Connector is located at the northeast quadrant of Brookhaven College to Bella Road and Alpha Road in Farmers Branch, Texas. The site is relatively flat and partially wooded with a creek running through the property.


© 2021 Kleinfelder

7805 Mesquite Bend Dr., Suite 100, Irving, TX 75063 p | 972.868.5009 f | 972.409.0008

## 1.3 PURPOSE AND SCOPE

This study was performed based on the Scope of Services presented in our proposal number 136796 dated October 11, 2013, and our proposal DFW20P110120), dated April 9, 2020. The purpose of our geotechnical study was to evaluate subsurface soil and groundwater conditions at the site to provide recommendations for use during design and construction of the proposed additions. To accomplish this purpose, we performed the following tasks:

- Drilled 4 bridge borings (3 borings to a depth of 80 feet and 1 boring to a depth of 60 feet), 4 pavement borings to a depth of 10 feet, 2 culvert borings to a depth of 25 feet below grade under the original scope of work, and 4 detention pond borings were drilled to a depths of 5.5 to 20 feet below ground service under the 2020 scope of work. Borings were drilled to obtain samples for visual evaluation, laboratory testing, and to observe subsurface conditions;
- Performed laboratory testing on select samples to evaluate soil/rock classification and to determine the generalized engineering properties of the subsurface soils and rock; and
- Performed engineering analyses using the collected data to develop geotechnical recommendations for the design and construction of the proposed bridge, culverts, and pavement.

This report is based on the project information provided to us by the Town of Addison and the original engineer of record, Nathan D. Maier Consulting Engineers, and KHA. If the project information differs from the descriptions contained in this report, we should be contacted to review our recommendations. It is possible that modification of our recommendations may be required based upon changes in the project.


© 2021 Kleinfelder

7805 Mesquite Bend Dr., Suite 100, Irving, TX 75063 p | 972.868.5009 f | 972.409.0008

# 2 FIELD EXPLORATION AND LABORATORY TESTING

## 2.1 FIELD EXPLORATION

Subsurface conditions were evaluated by drilling and sampling 10 borings with a truck-mounted drilling rig. Bridge borings B-01 through B-04 were drilled to depths of 60 to 80 feet below existing grade, pavement borings P-01 through P-04 were drilled to a depth of 10 feet below existing grade, and culvert borings C-01 and C-02 were drilled to a depth of 25 feet below existing grade. These boring were completed between October 29 and November 5, 2013. The approximate boring locations are presented on Figure 1, Exploration Location Plan and Vicinity Map Plan of Borings, in the Appendix. These original locations were staked by NDMCE.

Borings D-01 and D-02 were drilled on October 19, 2020, due to the addition of a detention pond on the southern portion of the proposed road. The borings were located in the field by Kleinfelder and drilled to depths of approximately 15 and 20 feet below existing grade.

Borings D-03 and D-04 were drilled on December 15, 2020, with a manual hand auger to evaluate soils within the detention pond as well as the depth of weathered limestone in the footprint of the detention pond. The borings were located in the field by Kleinfelder and drilled to depths of approximately 5.5 to 7 feet below existing grade.

Hollow stem augers, continuous flight augers and push sampling drilling techniques were used without drilling fluids within the clayey material. Rock and rock-like materials were collected with a NX size double-tube core barrel. Drilling fluid was introduced into the boring during coring operations.

When present, seepage and groundwater levels were recorded, as discussed in a following section. Bridge Borings B-01, B-02, and B-04 were left open overnight for a 24-hour water reading. At the completion of drilling or at the end of the 24-hour water reading, each boring was backfilled with auger cuttings up to and slightly above the existing ground surface in open areas.

A log of each boring is presented in the Appendix, along with a boring log key to the symbols and terms used on the logs (Figures 2 and 3). The logs indicate the material types, depths, and other details of materials encountered for each boring. Soil and rock descriptions presented


© 2021 Kleinfelder

7805 Mesquite Bend Dr., Suite 100, Irving, TX 75063 p | 972.868.5009 f | 972.409.0008

upon the boring logs resulted from a combination of field and laboratory test data. Stratigraphy lines correspond to the approximate boundary between strata. However, the in-situ subsurface transition can be, and is often gradual.

Relatively undisturbed samples of cohesive soils were collected by using the drilling rig to push a seamless steel Shelby tube sampler with an outside diameter of 3 inches into the soil (based upon ASTM D1587). The depths at which these samples were collected are indicated on the boring logs. After a tube was recovered, the sample was extruded in the field, examined, and logged. The sample was then sealed in a plastic bag to reduce moisture loss and protect the sample.

During logging, an estimate of the sample consistency was obtained using a pocket penetrometer. This test provides relative strength data that is used as an approximate indicator of shear strength. The result of the penetrometer reading was recorded at a corresponding depth on the boring logs. Note that a reported value of "4.5+" indicates that the capacity of the penetrometer device was exceeded.

Additionally, granular soils and weathered limestone samples were collected by driving a split-spoon sampler in conjunction with the Standard Penetration Test (SPT). This technique involves driving the spoon sampler a distance into the soil using a free-falling hammer (based upon ASTM D 1586). During the test, the logger records the number of blows required to drive the spoon sampler over three successive 6-inch increments. The first 6 inches is the "seating drive," while the number of blows required to drive the sampler the last two 6-inch increments is the "penetration" in blows per foot. Where resistance was high, the number of inches of penetration for 50 blows of the hammer is recorded. When less than 6 inches of penetration is obtained, the test is terminated regardless of the drive increment. The results of the penetration test are reported on the boring log at the corresponding depth. Materials recovered from the split-spoon sampler are then placed in a plastic bag to protect the sample and to reduce moisture loss. The boreholes were backfilled with soil cutting upon completion of drilling.

Rock and rock-like materials were evaluated in place using the Texas Department of Transportation (TxDOT) cone penetrometer test. This test evaluates the shear strength of the tested material by driving a steel cone into the material using a free-falling hammer (based upon Method TEX 132-E). During the test, the logger recorded either the number of blows producing 12 inches of penetration or the total inches of penetration due to two successive applications of


© 2021 Kleinfelder

7805 Mesquite Bend Dr., Suite 100, Irving, TX 75063 p | 972.868.5009 f | 972.409.0008

50 blows, for a total of 100 blows. The results of the test were recorded on the boring logs at the corresponding test depth. The bridge borings were terminated based on TxDOT standards for bridge design, which requires 4 consecutive blow counts of 100 blows for 3 inches or better.

Samples of rock and/or rock-like materials were collected with an NX size double-tube core barrel fitted with a carbide bit. The lengths of core run and are recorded on the boring logs at the corresponding depth. Samples are removed from the core barrel in the field, field classified, sealed, and packaged for transportation for further examination and testing. Before packaging, the total length of the recovered sample is recorded and reported as a percentage of the total sample length (REC). The total length of all the pieces greater than four inches in length is also recorded as a percentage of the total sample length and reported as the rock quality designation (RQD). Core breaks obviously caused by the drilling process were fitted together and counted as a continuous piece. Breaks that were not easily distinguished as being a result of the drilling process were conservatively considered a natural break.

## 2.2 LABORATORY TESTING

Laboratory testing was performed on selected samples collected from the borings during drilling. These samples were selected as being generally representative of that stratum and/or boring(s). Testing was performed to allow for material classification according to the Unified Soil Classification System (ASTM D 2487), and to evaluate the engineering properties of the materials. These tests included:

- Moisture content;
- Dry unit weight;
- Atterberg limits (liquid and plastic limits);
- Percent passing No. 200 sieve;
- One-dimensional swell under approximate overburden load;
- Soluble sulfates;
- Lime vs pH series test; and
- Unconfined compressive strength of soil/rock.

The test results are presented at the corresponding depth on each boring log and Table 1, Laboratory Test Results Summary in the Appendix.


© 2021 Kleinfelder

7805 Mesquite Bend Dr., Suite 100, Irving, TX 75063 p | 972.868.5009 f | 972.409.0008

# 3 SUBSURFACE CONDITIONS

## 3.1 GEOLOGY

The Atlas maps published by the Bureau of Economic Geology at the University of Texas, Austin indicated that the site is located on border of the Austin Chalk and Eagle Ford geological formation. The Austin Chalk was encountered on the eastern part of the project at borings C-02 and P-01. The rest of the borings lie in the Eagle Ford Formation. The Austin Chalk formation typically consists of fat clays overlying lean, chalky clay, followed by the parent limestone bedrock. The thickness of the clay above the limestone varies but is generally encountered at a shallow depth. The dark brown fat clays are typically highly expansive, while the lean chalky clay is only moderately expansive. The upper portions of the limestone is generally weathered, fractured, and very light brown to light yellow brown in color. Some zones of severely weathered limestone that are clay-like can be present above the weathered material. The underlying primary limestone is generally harder than the weathered limestone and is light to medium gray in color.

The Eagle Ford formation typically includes residual clay and shaly clay overlying the primary shale that contains significant quantities of soluble sulfates. The clays and shaly clays of the Eagle Ford vary in color from dark brown to yellow brown, are highly expansive. The clays are often jointed; contain silt and sand seams/partings, and bentonite seams/layers. The primary shale is commonly gray to dark gray in color and is not as hard as most regional rock materials. The shale is often calcareous and can contain very hard limestone and sandstone seams. Soft bentonite seams and layers can also be present.

## 3.2 STRATIGRAPHY

The subsurface conditions, observed in our borings, consisted of are high plasticity clay (CH) and moderate plasticity clay (CL), overlying shale or weathered limestone and limestone. Detailed descriptions of the stratigraphy are included in the boring logs presented on Plates 4 through 14 in the Appendix.


© 2021 Kleinfelder

7805 Mesquite Bend Dr., Suite 100, Irving, TX 75063 p | 972.868.5009 f | 972.409.0008

## 3.3 GROUNDWATER OBSERVATIONS

The borings were advanced using techniques that allow for direct and indirect observations of seepage and groundwater during drilling operations. Groundwater was observed in two of the borings (B-01 and C-01) during drilling operations. All pavement borings were dry. These observations have been made during the course of this study, as indicated on the boring logs and Table 3.1.

**Table 3.1: Groundwater Observation**

| Boring | Depth to Groundwater below Existing Grade (feet) | | |
|---|---|---|---|
| | During Drilling | On completion of Drilling | After 24 hours |
| B-01 | 13 | 5 (water added for coring) | 5 |
| B-02 | Dry | 5 (water added for coring) | 13 |
| B-03 | Dry | 16 (water added for coring) | NA |
| B-04 | Dry | 6 (water added for coring) | Dry |
| C-01 | 5 | 4 | 6 |
| C-02 | Dry | Dry | NA |
| D-01 | Dry | Dry | NA |
| D-01 | Dry | Dry | NA |

The occurrence of groundwater can vary due to many factors. These factors include seasonal changes, site topography, surface runoff, the layering and permeability of subsurface strata; water levels in the creek, utilities, and other factors not evident at the time of this study. The possibility of groundwater and its fluctuation should be considered when developing this project. A groundwater study has not been performed. Long-term observations would be necessary to more accurately evaluate groundwater levels and fluctuations. We recommend that a test hole be drilled outside the footprint of the proposed bridge prior to the start of construction to establish the groundwater level at that time. This will enable the contractor to select the appropriate equipment to install the foundations.

## 3.4 EXPANSIVE SOIL CHARACTERISTICS

The subgrade at this site includes expansive soil that will exhibit shrink and swell behavior. The amount of shrink/swell behavior will depend upon moisture fluctuations that occur over the


© 2021 Kleinfelder

7805 Mesquite Bend Dr., Suite 100, Irving, TX 75063 p | 972.868.5009 f | 972.409.0008

design life of the structure. The total magnitude of the shrink/swell behavior is also dependent upon the thickness of the expansive soil and the depth of the active moisture zone. Moisture fluctuations occur due to seasonal cycles but can also be influenced to varying degrees by drainage conditions; site grades/sloping ground, landscaping, irrigation practices, the presence of vegetation, groundwater, and the presence of flatwork or other impervious barriers. This large number of variables complicates the evaluation of the magnitude of shrink/swell movements that could occur.

An estimate of the potential expansive soil movement was made using a variety of methods, including the Potential Vertical Rise (PVR) Method 124-E published by TxDOT, the results of laboratory index and swell testing, engineering judgment, and our experience. The estimated soil movement or Potential Vertical Movement (PVM) is summarized in Table 3.2.

**Table 3.2: Estimated Potential Soil Movement (PVM)**

| Location | Based on TxDOT Method (dry condition) |
|---|---|
| B-01 | 2.0 |
| B-02 | 3.5 |
| B-03 | 3.0 |
| B-04 | 3.5 |
| C-01 | 1.5 |
| C-02 | 1.0 |
| P-01 | 2.0 |
| P-02 | 3.0 |
| P-03 | 3.0 |
| P-04 | 1.0 |

Recognize these values are not exact values but are only an indication of the potential movements due to expansive soil for seasonal moisture fluctuations. Actual movements may be significantly larger than estimated due to inadequate site grading, poor drainage, ponding surface water, and/or leaks in utility lines. Significant changes to existing site grading can also alter actual vertical movements by changing the thickness of the expansive soil and/or altering the active moisture zone depth.


© 2021 Kleinfelder

7805 Mesquite Bend Dr., Suite 100, Irving, TX 75063 p | 972.868.5009 f | 972.409.0008

Selected plastic soils were also subjected to one-dimensional swell tests. These tests are summarized in Table 3.3. The swell and swell pressure values provided are based upon laboratory testing. Higher and lower values are possible in other areas of the structure.

**TABLE 3.3: SWELL TEST SUMMARY**

| Location | Depth (ft.) | Swell (%) | Load Applied (psf) | Swell Pressure (psf) |
|---|---|---|---|---|
| B-01 | 3.5-5 | 0.0 | 500 | NA |
| B-01 | 8-10 | 0.0 | 1000 | NA |
| B-02 | 3.5-5 | 7.7 | 500 | 31,500 |
| B-02 | 6.5-8 | 7.3 | 875 | 24,125 |
| B-03 | 3.5-5 | 6.9 | 500 | 24,500 |
| B-03 | 8-10 | 0.5 | 1,000 | NA |
| B-04 | 6.5-8 | 4.7 | 875 | 13,525 |
| C-01 | 8-10 | 0.0 | 1,000 | NA |


© 2021 Kleinfelder

7805 Mesquite Bend Dr., Suite 100, Irving, TX 75063 p | 972.868.5009 f | 972.409.0008

# 4 ANALYSIS AND RECOMMENDATIONS

Based on the results of our evaluation, in our professional opinion, the project site can be developed for the proposed structure using conventional grading and foundation construction techniques, provided that the recommendations presented herein are incorporated into the design and construction of the project. The primary geotechnical concern for this project is the presence of inconsistent and highly expansive clay soils. Recommendations addressing expansive clay soils, as well as general recommendations regarding geotechnical aspects of the project design and construction, are presented below.

## 4.1 BRIDGE STRUCTURE

### 4.1.1 Drilled Shaft Foundations

Borings B-01 through B-4 were drilled for the bridge structure. The shafts should be straight-sided, steel reinforced concrete, and designed based on the recommendations presented in Table 4.1.

**Table 4.1: Drilled Shaft Design Values**

| Design Item | Design Value |
|---|---|
| Shaft type | Auger-excavated and straight-sided |
| Bearing Stratum Description | Gray Shale |
| Approximate Bearing Stratum Depth | 19 to 25 feet below existing grade |
| Minimum Penetration | 12 feet into bearing stratum for bridge (2) |
| Maximum Allowable Bearing Pressure | 12,000 psf (1) |
| Maximum Allowable Side Shear Within Bearing Stratum | 1,000 psf (for axial downward and upward resistance) (1) |
| Minimum Shaft Diameter | 24 inches |
| Need for Temporary Steel Casing During Installation | Should be Anticipated |
| Uplift Pressure due to expansive clays | 1,200 psf over 10 feet |

Note: (1) A factor of safety of 3 was used to evaluate allowable bearing pressure and for side shear.
(2) The actual penetrations will need to be determined by the project structural engineer during structural design.


© 2021 Kleinfelder

7805 Mesquite Bend Dr., Suite 100, Irving, TX 75063 p | 972.868.5009 f | 972.409.0008

Straight drilled reinforced concrete shafts will use a combination of end bearing and side resistance in developing their load carrying capacity. Where temporary casing is required, no side resistance should be considered above the bottom of the casing. Foundations designed based on these values should experience minor settlement due to loading when properly constructed, but we recommend that the design account for one-half inch of potential settlement. Because of potential variations in the depth of the bearing material, the depth of the shafts should be based upon the recommended penetration into the bearing stratum, and not upon a predetermined elevation. We recommend that Kleinfelder be present during construction to observe the penetration into the bearing material.

The expansive subgrade will subject the shafts to uplift pressures and will create tensile forces within the shafts. Accordingly, each shaft should be steel reinforced to withstand these forces. The actual uplift forces will vary with depth and moisture condition, but steel reinforcement design for the soil uplift pressures may be modeled using 1,200 psf acting over the entire shaft perimeter of the upper 10 feet of the shaft., This reinforcement should not preclude the need for additional reinforcement due to structural design or as required by appropriate codes. It is important to note that the uplift pressure provided is due to expansive soils and does not consider other pressures such as wind, impact, etc. Resistance to structural uplift loads should be evaluated using the values provided in Table 4.1.

### 4.1.2 Drilled Shaft Construction Considerations

We recommend that Kleinfelder monitor drilled shaft construction to observe the followings:

- the proper identification of bearing material;
- that adequate penetration of the shaft excavation into the bearing layer is provided;
- that the base and sides of the shaft excavation are clean of loose cuttings; and
- that if seepage is encountered, whether it is of sufficient amount to require the use of temporary steel casing for straight-sided shafts.

Note that these items and the following discussion are intended to benefit the Owner and maintain the intent of the design during construction. This discussion is not intended to prescribe a specific means and methods for construction.


© 2021 Kleinfelder

7805 Mesquite Bend Dr., Suite 100, Irving, TX 75063 p | 972.868.5009 f | 972.409.0008

Seepage and groundwater were observed in borings B-01 and C-01, at the site during this study. If seepage occurs during construction, temporary steel casing may be required. If casing is used, the casing should be advanced 2 to 3 feet into the shale stratum to establish an impermeable seal. A continuous head of plastic concrete should be maintained within the casing during casing extraction to prevent the caving of the excavation and/or inflow of groundwater.

The concrete placement should occur as soon as possible after completion of the excavation and observation of the shaft, and no longer than 8 hours after completion of the excavation. Prolonged air exposure or inundation of the bearing surface with groundwater could deteriorate the bearing material. Shaft excavations should be deepened if delays occur to provide a suitable bearing surface. Kleinfelder should be contacted in this event to provide appropriate recommendations.

Some intervals of the limestone within the shale stratum are hard. This limestone can be difficult to penetrate, especially when drilling large diameter shafts. The drilled shaft excavations should be performed with hard rock drilling equipment suitable to perform this work by a contractor experienced in this area.

Precautions are required during reinforcing steel and concrete placement to prevent loose soil, rock, and debris from falling into the excavation. The concrete should not be allowed to strike the reinforcing cage or the sides of the excavation during placement. A tremie pipe can prevent this occurrence. Mushrooming of the drilled shaft near or at the surface should not be allowed to prevent the formation of a horizontal surface that will be subject to expansive uplift pressures.

### 4.1.3 LPILE Parameters (version 2019) for Soil and Rock

The LPILE parameters provided below are for the subsurface material encountered in the Borings B-01 through B-04. The depths of each layer can be generalized from the boring log. The Stiff Clay w/o water soil type parameter was used for the CH, CL, and Weathered Shale soils encountered in the borings. Tables 4.2 and 4.3 provide Lpile parameters for soil and rock.


© 2021 Kleinfelder

7805 Mesquite Bend Dr., Suite 100, Irving, TX 75063 p | 972.868.5009 f | 972.409.0008

**Table 4.2 – Lpile Parameters for Soil**

| Soil Type | Cohesion, psf | Friction Angle | Unit Wt, pcf[1] | $\varepsilon_{50}/k_{rm}$ |
|---|---|---|---|---|
| Neglect 0 - 3 feet | --- | --- | --- | --- |
| Stiff Clay w/o water (above water table) | 2,500 | --- | 124 | 0.0055 |
| Stiff Clay w/o water (below water table) | 1,500 | --- | 124 | 0.007 |

(1) Represents total unit weight. In conditions where soils are below the water table, submerged unit weights should be used. Submerged unit weight is obtained by subtracting the unit weight of water (62.4 pcf) from the total unit weight.

**Table 4.3 – Lpile Parameters for Rock**

| Lpile Rock Type | Uniaxial Compressive strength, psi | Initial Modulus of Rock Mass, psi | RQD, % | Unit Wt, pcf[1] | $K_{rm}$ |
|---|---|---|---|---|---|
| Weak Rock (Shale) | 90 | 800 | 50 | 137 | 0.0007 |

(1) Unit weights represent total unit weights. In conditions where soils are below the water table, submerged unit weights should be used.

### 4.1.4 Soluble Sulfates

Concrete that comes into contact with soils can be subject to sulfate attack. We measured soluble sulfate concentrations in 5 samples from this site. Concentrations were measured between 0.01 to 0.58 percent, with one sample having sulfate concentrations greater than 0.2 percent and four samples with concentrations less than 0.2 percent. Water-soluble sulfate concentrations of 0.2 percent or greater indicate Class 2 severe sulfate exposure, and concentrations of 0.1 percent to 0.2 percent indicate moderate sulfate exposure, according to the American Concrete Institute (ACI). For sites with Class 2 sulfate exposure, ACI recommends using a cement meeting the requirements for Type V (sulfate resistant) cement or the equivalent, with a maximum water-to-cementitious material ratio of 0.45 and air entrainment of 5 to 7 percent. We understand Type V cement may not be readily available. As alternative ACI allows a blend of any type of Portland cement and fly ash (Class F) that meets the performance requirements (ASTM C 1012) of ACI 201.


© 2021 Kleinfelder

7805 Mesquite Bend Dr., Suite 100, Irving, TX 75063 p | 972.868.5009 f | 972.409.0008

## 4.2 PAVEMENT RECOMMENDATIONS

### 4.2.1 Pavement Thickness

The pavement thickness calculation for the new rigid pavement section was performed using Pavement Analysis Software (WinPAS), Version 1.0.4, which is based on the AASHTO pavement design procedures. Values used in the analysis of the pavement capacity are as follows:

- 85% Reliability
- 0.35 Overall (Standard) Deviation
- 3,500 (psi) Concrete compressive strength at 28 days
- 3,694,022 psi Concrete Modulus of Elasticity
- 3.2 Load Transfer Coefficient (assumes the use of load transfer dowels across joints and tied shoulders)
- 256 psi/in Modulus of Subgrade Reaction (assumes treated subgrade)
- 1.1 Drainage Coefficient (assumes slow, positive drainage)
- 4.2 Initial Serviceability
- 2.5 Terminal Serviceability

These values were selected based upon guidance in the AASHTO and TxDOT pavement design guides, local experience, and engineering judgment.

Traffic information for pavement design was based on estimates from 2008 average weekday traffic on the City of Farmers Branch, Traffic Engineering Division website. If more accurate traffic information is available then we should be contacted to review the pavement section and revise our recommendations, if necessary. The recommended pavement is intended to provide a sufficient thickness of structural materials, such that wheel loads are widely distributed. Based upon this assumption, we recommend a minimum 6 inches of reinforced concrete pavement and 8 inches of lime stabilized subgrade below the concrete.

We understand the City of Farmers Branch prefers a pavement section consisting of 8 inches of Portland cement concrete over a moisture conditioned clay subgrade. While this pavement section is structurally sufficient for the anticipated traffic loads, it is our opinion that removing the


© 2021 Kleinfelder

7805 Mesquite Bend Dr., Suite 100, Irving, TX 75063 p | 972.868.5009 f | 972.409.0008

lime stabilized portion of the pavement section can lead to premature subgrade failures. The lime stabilized subgrade provides a consistent subgrade, reduces surface moisture infiltration, and provides a stable working platform for the paving contractor, particularly during wetter portions of the year.

An estimated PVR on the order of 2 to 4 inches was calculated for the subsurface material encountered in the pavement borings. While the pavement may be structurally adequate, it can still experience cracking and movement due to the expansive subgrade. Please note that the purpose of lime stabilizing the pavement subgrade is to increase its strength and to increase its permeability/porosity, not to reduce its post-construction swell potential. Post-construction heave can be mitigated by excavating, moisture conditioning and compacting the native clays soils during construction. Kleinfelder can provide recommendations for over-excavation, if desired, based upon the movement criteria established by the Town of Addison and the City of Farmers Branch.

The residual soils of the Eagle Ford formation typically contain high concentrations of soluble sulfates. When mixed with hydrated lime, the sulfates can react with the free calcium, forming the mineral ettringite. This reaction is typically highly expansive and can cause significant distress to the stabilized subgrade and pavement. This reaction can be mitigated by removal and replacement of the sulfate bearing soils, extending the mellowing time during the stabilization process, and double lime application techniques. Prior to the lime application process, we recommend the subgrade soils within the Eagle Ford zone be sampled at approximate 250-foot intervals and tested for soluble sulfate concentrations. Once the concentration level is established, an effective mitigation plan can be recommended. We recommend the construction contract provide provisions for removal and replacement of subgrade soils, extended mellowing periods, and double lime application techniques.

Due to the presence of softer material at the site, continuous proof rolling should be used to detect areas of soft and/or pumping soil. Proof rolling should be based upon TxDOT Standard Specification Item 216 and performed using a heavy tired vehicle weighing at least 25 tons, with the tires inflated to the manufacturer's specified operating pressure. The entire area should be proof rolled, with each succeeding pass offset by not greater than one tire width. Proof rolling should be performed within the pavement area, and also within flatwork areas, such as sidewalks, pads, etc. Kleinfelder should be present during proof rolling activities to assist with


© 2021 Kleinfelder

7805 Mesquite Bend Dr., Suite 100, Irving, TX 75063 p | 972.868.5009 f | 972.409.0008

the identification of unsuitable soil. Unsuitable soil should be undercut and reworked, or otherwise improved in a manner that is suitable to the engineer. When fill is planned, proof rolling should occur before the fill is placed. After proof rolling, and before fill placement, the subgrade should be scarified to a depth of 8 inches, and recompacted to the specified density and moisture content.

### 4.2.2 Pavement Subgrade Preparation

Subgrade soils at this site in the proposed pavement areas consist of dark brown to olive brown clay. Based on the results of laboratory testing, the subgrade performance of the on-site can be improved by stabilization with hydrated lime.

### 4.2.3 Pavement Material Specifications

The following pavement material specifications are based on Texas Department of Transportation's (TxDOT) 2014 Edition Standard Specifications.

- Portland Cement Concrete - TxDOT Item 360 - Concrete with a minimum 28-day compressive strength of 3,500 psi is recommended. Concrete should be reinforced and include load transfer dowels at joints. Concrete should include air entrainment to increase temperature resistance.
- Lime Stabilized Subgrade - TxDOT Item 260 except as modified herein. Apply and mix hydrated lime at an estimated application rate of 7 percent (42 lbs/sq.yd.) hydrated lime for an 8-inch stabilization depth. The application rate of hydrated lime should be verified during construction by performing lime series tests with the lime proposed by the contractor. The lime series should include pH (12.4 target) percent swell (less than 1 percent under a confining pressure of 150 psf after curing) and compressive strength (minimum of 150 psi after curing for 5 days at 100 degrees Fahrenheit) The well mixed material should be mellowed for a minimum of 3 days, remixed, moisture conditioned and compacted to a minimum of 95 percent of ASTM D 698 (Standard Proctor density) at 2 to 5 percentage points above the optimum moisture content. Stabilization of the subgrade should extend at least one foot outside the perimeter of the pavement.


© 2021 Kleinfelder

7805 Mesquite Bend Dr., Suite 100, Irving, TX 75063 p | 972.868.5009 f | 972.409.0008

## 4.3 ADDITIONAL DESIGN CONSIDERATIONS

### 4.3.1 Box Culvert

We understand that construction of two box culverts are planned for the site. One will be located west of Alpha Road and the other located at the road next to Brookhaven College. The subsurface conditions vary greatly between the two culverts. Boring C-01 located next to Brookhaven College encountered subsurface conditions of dark brown, olive brown to yellow brown clay and groundwater at 5 feet. This culvert at Boring C-01 may utilize an allowable bearing pressure of 1,500 psf. Boring C-02 located next to Alpha Road encountered dark brown to light brown clay, underlain by weathered limestone and limestone. This culvert at Boring C-02 may utilize an allowable bearing pressure of 2,000 psf.

### 4.3.2 Wall Structures

Reinforced concrete walls related to the bridge construction should be supported by drilled shafts. The drilled shaft recommendations provided for the bridge structure should be used for designing the drilled shafts to support the wing walls or other walls related to the bridge construction. Where the wall bottoms are supported on drilled shafts, wall bottoms should be isolated from the underlying clay by minimum 8-inch voids. Retainers should be provided to prevent sloughing and caving of soils into the voids. The following design parameters and considerations are presented for design of the walls subject to lateral earth pressures.

### 4.3.3. Wall Outfall

The concrete cantilever gravity walls planned around the detention pond will have an outfall that should be supported by spread footings. We recommend footings be designed for a net allowable soil bearing pressure of 1,500 pounds per square foot (psf) for dead plus sustained live loads. Footings should be embedded at least 24 inches below the lowest adjacent grade. Additional embedment for uplift resistance shall be determined by the structural engineer. All footings should bear on native stiff clay soils. The footing dimension and reinforcement should be designed by the structural engineer; however, continuous, and isolated spread footings should have minimum widths of 18 and 24 inches, respectively. A one-third increase in the above bearing pressures can be used for transient wind or seismic loads. Footings should be


© 2021 Kleinfelder

7805 Mesquite Bend Dr., Suite 100, Irving, TX 75063 p | 972.868.5009 f | 972.409.0008

backfilled as soon as practical after concrete placement. An allowable coefficient of friction of 0.24 between the base of the footings and the native soils can be used for sliding resistance using the dead load normal stresses.

### 4.3.4 Lateral Earth Pressures

The lateral earth pressures on the retaining walls and culvert will depend on the restraint conditions of the walls, type of backfill, surcharge pressure, and hydrostatic pressure potential. Depending on the wall type, the design condition could be active or at-rest. If the walls are constructed to be restrained at the top, thus the at-rest ($K_o$) earth pressure coefficient will be developed. Active pressures will apply for walls that are allowed to rotate. Coefficients of active earth pressure and earth pressure at rest are provided in Table 4.4 and may be used for horizontal backfill.

**TABLE 4.4: EARTH PRESSURE CRITERIA**

| Material | Earth Pressure Condition | Equivalent Fluid Pressure, pcf | |
|---|---|---|---|
| | | Drained Condition | Undrained Condition |
| Compacted, On-site Site Soil $\phi$=19°, $\gamma_t$=125 pcf | At-rest, $K_o$ = 0.67 | 84 | 105 |
| | Active, $K_a$ = 0.51 | 64 | 94 |
| Granular/Select Fill $\phi$=28°, $\gamma_t$=120 pcf | At-rest, $K_o$ = 0.53 | 64 | 93 |
| | Active, $K_a$ = 0.36 | 43 | 83 |

The above values do not include the effect of hydrostatic pressures or lateral pressures induced by surface loads, which must be taken into account by the structural engineer. Subsurface drain systems must be included in the design to prevent hydrostatic build-up behind the walls. The preceding recommendations assume that the backfill material between the wall and excavation face consists of fine-graded and coarse-graded drainage material meeting the specifications listed in the following section. The above lateral pressures do not include any surcharge loads such as traffic loads, which could be applied behind the top of the wall. Sloping ground surface behind the tops of walls or surcharge loads behind the walls will increase lateral earth pressures. Appropriate factors of safety must be used.


© 2021 Kleinfelder

7805 Mesquite Bend Dr., Suite 100, Irving, TX 75063 p | 972.868.5009 f | 972.409.0008

### 4.3.5 2018 IBC Seismic Design Parameters

Based on information obtained from the borings, published geologic literature and maps, and on our interpretation of the 2018 IBC criteria, it is our opinion that the project site may be classified as Site Class C according to Section 1613.2.2 of 2018 IBC and Chapter 20 of ASCE 7. Approximate coordinates for the site are noted below. Accordingly, seismic design parameters for Site Class C have been provided for the 2018 IBC.

- Latitude: 32.93200 °N
- Longitude: -96.84802 °W

The Risk-Targeted Maximum Considered Earthquake ($MCE_R$) mapped spectral accelerations for 0.2 seconds and 1 second periods ($S_s$ and $S_1$) were estimated using Section 1613.2.1 of the 2018 IBC and the SEAOC and OSHPD website that uses the U.S. Geological Survey (USGS) web services (available at http://seismicmaps.org). The mapped acceleration values and associated soil amplification factors ($F_a$ and $F_v$) based on the USGS Hazard Data and corresponding site modified spectral accelerations ($S_{MS}$ and $S_{M1}$) and design spectral accelerations ($S_{DS}$ and $S_{D1}$) are presented in Table 4.5.

**Table 4.5**
**2018 IBC Seismic Design Parameters**

| Design Parameter | Recommended Value |
|---|---|
| Site Class | C |
| $S_s$ (g) | 0.104 |
| $S_1$ (g) | 0.055 |
| $F_a$ | 1.3 |
| $F_v$ | 1.5 |
| $S_{MS}$ (g) | 0.135 |
| $S_{M1}$ (g) | 0.083 |
| $S_{DS}$ (g) | 0.09 |
| $S_{D1}$ (g) | 0.055 |


© 2021 Kleinfelder

7805 Mesquite Bend Dr., Suite 100, Irving, TX 75063 p | 972.868.5009 f | 972.409.0008

### 4.3.6 Utility and Service Lines

Utility lines along the sidewalk or roadway may experience differential movement in response to expansive soil movements. These movements may damage connections. Flexible connections are recommended to account for differential movement between the lighting and utilities.

Design and construction of the utilities must also consider other expansive soil issues in order to limit damage. Excavations should be sloped so that water within excavations will flow to a low point away from the roadway where it can be removed before backfilling. Compaction of bedding material should not be water-jetted. Compacted backfill above the utilities should be on-site clays to limit the percolation of surface water. Utility trenches extending under structures should include fat clay or concrete cut-off collars at the perimeter/edge to prevent the transmission of water along trench lines.

### 4.3.7 Detention Pond Slopes

Borings D-01 and D-02 indicate the detention pond side slopes will consist of very high plasticity clay soils. As such we recommend a target slope of 4 horizontal to 1 vertical (4H:1V) if space allows, but in no case should be less than 3H:1V. The side slopes should be well vegetated for erosion mitigation; however, routine maintenance may be required to repair shallow skin slides caused by cyclic wetting and drying.


© 2021 Kleinfelder

7805 Mesquite Bend Dr., Suite 100, Irving, TX 75063 p | 972.868.5009 f | 972.409.0008

# 5 EARTHWORK

## 5.1 SITE PREPARATION

The project sites should be stripped of vegetation, roots, organic material, existing construction materials (if present) and other undesirable debris. Obstructions that could hinder preparation of the sites should also be removed, with special attention given to tree stumps and associated root systems. A typical stripping depth is about 6 inches, but the actual depth will vary and should be based on field observations. After stripping, the area should be suitable for the support of construction equipment. Unsuitable areas (such as those with wet, soft, yielding, and/or pumping subgrade) should be corrected before construction proceeds.

We recommend proof rolling be used to detect areas of soft and/or pumping soil in the proposed roadway. Proof rolling should be based upon TxDOT Standard Specification Item 216 and performed using a heavy tired vehicle weighing at least 25 tons, with the tires inflated to the manufacturer's specified operating pressure. The entire roadway area should be proof rolled at the final subgrade level, with each succeeding pass offset by not greater than one tire width. Kleinfelder can provide construction observation services during proof rolling activities to assist with the identification of unsuitable soil. Unsuitable soil should be undercut and reworked, or otherwise improved in a manner that is suitable to the engineer. When fill is planned, proof rolling should occur before the fill is placed. After proof rolling, and before fill placement, the subgrade should be scarified to a depth of 8 inches, and recompacted to the specified density and moisture content.

## 5.2 MATERIAL REQUIREMENTS AND TESTING

Table 5.1 provides material, moisture, and density requirements for a variety of materials and applications. Compaction of each lift should be continuous over its entire area. The maximum allowable aggregate size for these materials is 2 inches (except for crushed limestone, which should be limited to 1½ inches). Fill should be placed in loose horizontal lifts not exceeding 8 inches, with the intent of providing a compacted lift thickness of 6 inches. When crushed limestone is used, the maximum loose lift thickness should be reduced to 6 inches (or less if there is difficulty achieving compaction). Fill placed along slopes should be placed in horizontal lifts that are benched into the slope.


© 2021 Kleinfelder

7805 Mesquite Bend Dr., Suite 100, Irving, TX 75063 p | 972.868.5009 f | 972.409.0008

**Table 5.1 - Material and Compaction Requirements**

| Material Use | Material Requirements | Proctor Test Method | [1]Density Requirement | [1]Moisture Requirement |
|---|---|---|---|---|
| "Low-expansive" Select Fill: | PI: 7 to 15, LL≤35<br>Passing #200 Sieve: ≤70%<br>Organics < 2 % | ASTM D 698 | 95 % minimum | -1 to +3 % |
| Native Clay Soils | NA | ASTM D 698 | 94 % minimum | +2 to +6 % |
| Lime Stabilized Subgrade: Pavement | TxDOT Item 260<br>Organics < 2 % | ASTM D 698 | 95 % minimum | +2 to +5 % |

[1] Based upon Maximum Dry Density and Optimum Moisture Content

Prior to placing any fill material, the exposed subgrade should be scarified to a depth of 8 inches; moisture conditioned and compacted per the requirements for moisture conditioned on-site soil provided in Table 5.1. The material should be a consistent with regard to type and moisture content. Clods should be processed and mixed, and water should be evenly applied, so that each lift has a uniform moisture and density. Each lift should be tested to confirm it has the specified moisture and compaction. One moisture/density test should be performed for every 5,000 square feet per lift of compacted area. For smaller areas, a minimum of three tests should be provided for every lift. Subsequent lifts should not be placed until the exposed lift has the specified moisture and density. Lifts failing to meet the moisture and density requirements should be reworked to meet the required specifications.

The specified moisture content must be maintained until compaction of the overlying lift, or construction of overlying flatwork. Failure to maintain the moisture content could result in excessive soil movement and can also have a detrimental effect on overlying plastic concrete. The contractor must provide some means of controlling the moisture content (such as water hoses, water trucks, etc.). Maintaining subgrade moisture is always critical, but will require the most effort during warm, windy and/or sunny conditions. Density and moisture testing is recommended to provide an indication that adequate earthwork is being provided. However, the quality of the fill is the sole responsibility of the contractor. Satisfactory verification testing is not a guarantee of the quality of the contractor's earthwork operations.


© 2021 Kleinfelder

7805 Mesquite Bend Dr., Suite 100, Irving, TX 75063 p | 972.868.5009 f | 972.409.0008

# 6 LIMITATIONS

This work was performed in a manner consistent with the level of care and skill ordinarily exercised by other members of Kleinfelder's profession practicing in the same locality, under similar conditions and at the date the services are provided. Our conclusions, opinions and recommendations are based on a limited number of observations and data. It is possible that conditions could vary between or beyond the data evaluated. Kleinfelder makes no other representation, guarantee or warranty, express or implied, regarding the services, communication (oral or written), report, opinion, or instrument of service provided.

This report may be used only by the Client and the registered design professional in responsible charge and only for the purposes stated for this specific engagement within a reasonable time from its issuance, but in no event later than two (2) years from the date of the report.

The work performed was based on project information provided by Client. If Client does not retain Kleinfelder to review any plans and specifications, including any revisions or modifications to the plans and specifications, Kleinfelder assumes no responsibility for the suitability of our recommendations. In addition, if there are any changes in the field to the plans and specifications, Client must obtain written approval from Kleinfelder's engineer that such changes do not affect our recommendations. Failure to do so will vitiate Kleinfelder's recommendations.

Recommendations contained in this report are based on our field observations and subsurface explorations, limited laboratory tests, and our present knowledge of the proposed construction. It is possible that soil, rock, or groundwater conditions could vary between or beyond the points explored. If soil, rock, or groundwater conditions are encountered during construction that differ from those described herein, the client is responsible for ensuring that Kleinfelder is notified immediately so that we may reevaluate the recommendations of this report. If the scope of the proposed construction, including the traffic estimates, and the design depths or locations of the foundations, changes from that described in this report, the conclusions and recommendations contained in this report are not considered valid unless the changes are reviewed, and the conclusions of this report are modified or approved in writing, by Kleinfelder.


© 2021 Kleinfelder

7805 Mesquite Bend Dr., Suite 100, Irving, TX 75063 p | 972.868.5009 f | 972.409.0008

As the geotechnical engineering firm that performed the geotechnical evaluation for this project, Kleinfelder should be retained to confirm that the recommendations of this report are properly incorporated in the design of this project, and properly implemented during construction. This may avoid misinterpretation of the information by other parties and will allow us to review and modify our recommendations if variations in the soil conditions are encountered. As a minimum Kleinfelder should be retained to provide the following continuing services for the project:

- Review the project plans and specifications, including any revisions or modifications;
- Observe foundation bearing soils to confirm conditions are as anticipated.

This report, and any future addenda or reports regarding this site, may be made available to bidders to supply them with only the data contained in the report regarding subsurface conditions and laboratory test results at the point and time noted. Bidders may not rely on interpretations, opinion, recommendations, or conclusions contained in the report. Because of the limited nature of any subsurface study, the contractor may encounter conditions during construction which differ from those presented in this report. In such event, the contractor should promptly notify the owner so that Kleinfelder's geotechnical engineer can be contacted to confirm those conditions. We recommend the contractor describe the nature and extent of the differing conditions in writing and that the construction contract include provisions for dealing with differing conditions. Contingency funds should be reserved for potential problems during earthwork and foundation construction.


© 2021 Kleinfelder

7805 Mesquite Bend Dr., Suite 100, Irving, TX 75063 p | 972.868.5009 f | 972.409.0008

KLEINFELDER

*Bright People. Right Solutions.*

# Figures

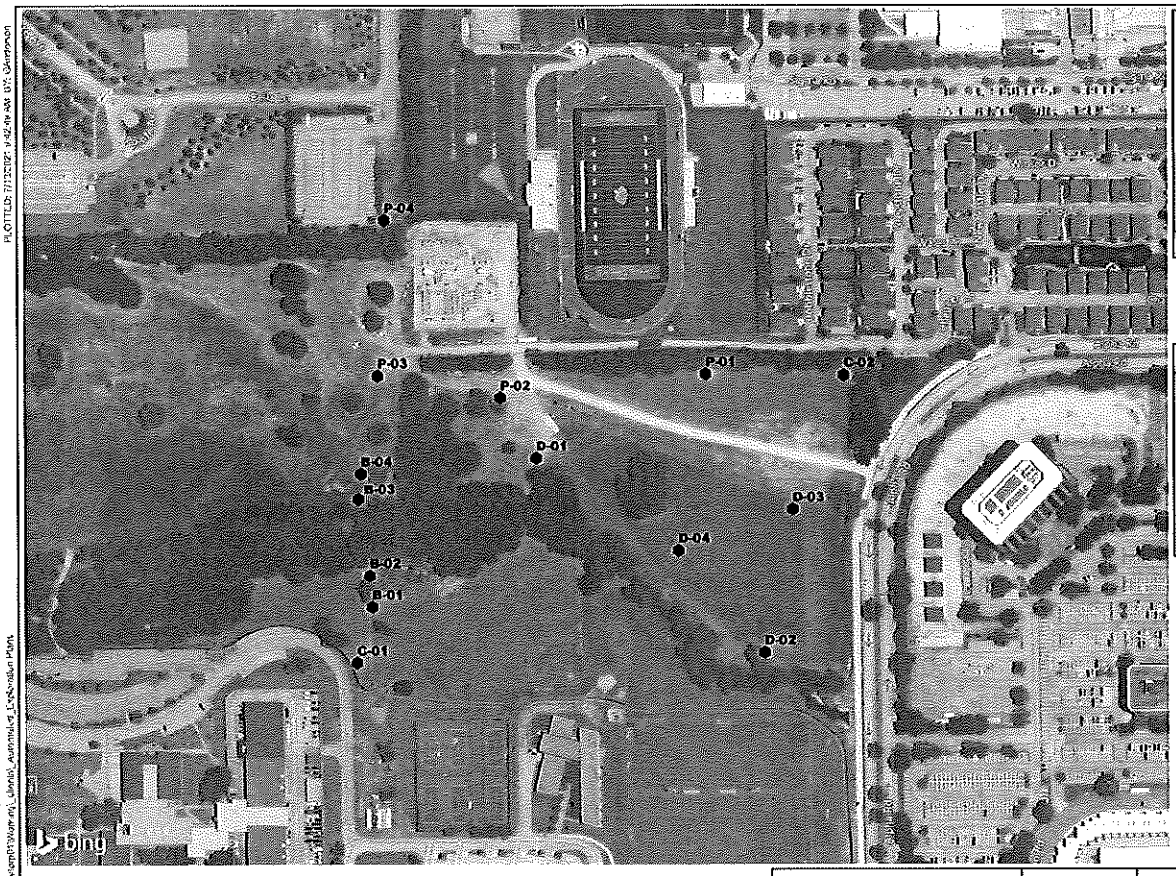


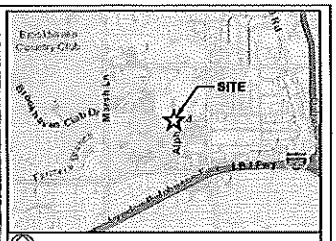


VICINITY MAP

NOT TO SCALE

NOTE:
BASE MAPPING AND VICINITY MAP CREATED FROM LAYERS COMPILED BY ESRI PRODUCTS AND 2021 MICROSOFT CORPORATION.
COORDINATE SYSTEM: NAD 1983 2011 STATEPLANE TEXAS NORTH CENTRAL FIPS 4202

LEGEND

● SOIL BORING

N

0 200 400

1 " = 200 SCALE IN FEET

The information included on this graphic representation has been compiled from a variety of sources and is subject to change without notice. Kleinfelder makes no representations or warranties, express or implied, as to accuracy, completeness, timeliness, or rights to the use of such information. This document is not intended for use as a land survey product nor is it designed or intended as a construction design document. The use or misuse of the information contained on this graphic representation is at the sole risk of the party using or misusing the information.

KLEINFELDER
Bright People. Right Solutions.

| | | | |
|---|---|---|---|
| PROJECT NO. 20212439.001A | EXPLORATION LOCATION PLAN AND VICINITY MAP | | FIGURE |
| DRAWN BY: DM | Alpha Road Connector - Vitruvian Phase I | | 1 |
| CHECKED BY: RH | Brookhaven Community College | | |
| DATE: 07-13-2021 | Farmers Branch, Texas | | |

KLEINFELDER

*Bright People. Right Solutions.*

# Appendix A

## SAMPLE/SAMPLER TYPE GRAPHICS

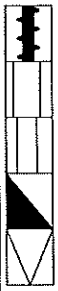

Auger Sample

NX CORE SAMPLE
(2.154 in. (54.7 mm.) core diameter)

SHELBY TUBE SAMPLER

STANDARD PENETRATION SPLIT SPOON SAMPLER
(2 in. (50.8 mm.) outer diameter and 1-3/8 in. (34.9 mm.) inner diameter)

TEXAS CONE PENETRATION

## GROUND WATER GRAPHICS

WATER LEVEL (level where first observed)

WATER LEVEL (level after exploration completion)

WATER LEVEL (additional levels after exploration)

OBSERVED SEEPAGE

## NOTES

1. The report and log key are an integral part of these logs. All data and interpretations in this log are subject to the explanations and limitations stated in the report.

2. Lines separating strata on the logs represent approximate boundaries only. Actual transitions may be gradual or differ from those shown.

3. No warranty is provided as to the continuity of soil or rock conditions between individual sample locations.

4. Logs represent general soil or rock conditions observed at the point of exploration on the date indicated.

5. In general, Unified Soil Classification System designations presented on the logs were based on visual classification in the field and were modified where appropriate based on gradation and index property testing.

6. Fine grained soils that plot within the hatched area on the Plasticity Chart, and coarse grained soils with between 5% and 12% passing the No. 200 sieve require dual USCS symbols, ie., GW-GM, GP-GM, GW-GC, GP-GC, GC-GM, SW-SM, SP-SM, SW-SC, SP-SC, SC-SM.

7. If sampler is not able to be driven at least 6 inches, 50/X indicates number of blows required to drive the identified sampler X inches with a 140 pound hammer falling 30 inches.

8. TCP-Texas Cone Penetrometer, a 3 inches diameter by 2.5 inches inch long 60 degree conical point driven with a 170 ±2 pound hammer dropped 24 ±0.5 inches.

## UNIFIED SOIL CLASSIFICATION SYSTEM (ASTM D 2487)

| | | | | | |
|---|---|---|---|---|---|
| COARSE GRAINED SOILS (More than half of material is larger than the #200 sieve) | GRAVELS (More than half of coarse fraction is larger than the #4 sieve) | CLEAN GRAVEL WITH <5% FINES | Cu ≥4 and 1≤Cc≤3 | GW | WELL-GRADED GRAVELS, GRAVEL-SAND MIXTURES WITH LITTLE OR NO FINES |
| | | | Cu <4 and/ or 1>Cc >3 | GP | POORLY GRADED GRAVELS, GRAVEL-SAND MIXTURES WITH LITTLE OR NO FINES |
| | | GRAVELS WITH 5% TO 12% FINES | Cu ≥4 and 1≤Cc≤3 | GW-GM | WELL-GRADED GRAVELS, GRAVEL-SAND MIXTURES WITH LITTLE FINES |
| | | | | GW-GC | WELL-GRADED GRAVELS, GRAVEL-SAND MIXTURES WITH LITTLE CLAY FINES |
| | | | Cu <4 and/ or 1>Cc >3 | GP-GM | POORLY GRADED GRAVELS, GRAVEL-SAND MIXTURES WITH LITTLE FINES |
| | | | | GP-GC | POORLY GRADED GRAVELS, GRAVEL-SAND MIXTURES WITH LITTLE CLAY FINES |
| | | GRAVELS WITH > 12% FINES | | GM | SILTY GRAVELS, GRAVEL-SILT-SAND MIXTURES |
| | | | | GC | CLAYEY GRAVELS, GRAVEL-SAND-CLAY MIXTURES |
| | | | | GC-GM | CLAYEY GRAVELS, GRAVEL-SAND-CLAY-SILT MIXTURES |
| | SANDS (More than half of coarse fraction is smaller than the #4 sieve) | CLEAN SANDS WITH <5% FINES | Cu ≥6 and 1≤Cc≤3 | SW | WELL-GRADED SANDS, SAND-GRAVEL MIXTURES WITH LITTLE OR NO FINES |
| | | | Cu <6 and/ or 1>Cc >3 | SP | POORLY GRADED SANDS, SAND-GRAVEL MIXTURES WITH LITTLE OR NO FINES |
| | | SANDS WITH 5% TO 12% FINES | Cu ≥6 and 1≤Cc≤3 | SW-SM | WELL-GRADED SANDS, SAND-GRAVEL MIXTURES WITH LITTLE FINES |
| | | | | SW-SC | WELL-GRADED SANDS, SAND-GRAVEL MIXTURES WITH LITTLE CLAY FINES |
| | | | Cu <6 and/ or 1>Cc >3 | SP-SM | POORLY GRADED SANDS, SAND-GRAVEL MIXTURES WITH LITTLE FINES |
| | | | | SP-SC | POORLY GRADED SANDS, SAND-GRAVEL MIXTURES WITH LITTLE CLAY FINES |
| | | SANDS WITH > 12% FINES | | SM | SILTY SANDS, SAND-GRAVEL-SILT MIXTURES |
| | | | | SC | CLAYEY SANDS, SAND-GRAVEL-CLAY MIXTURES |
| | | | | SC-SM | CLAYEY SANDS, SAND-SILT-CLAY MIXTURES |
| FINE GRAINED SOILS (More than half of material is smaller than the #200 sieve) | SILTS AND CLAYS (Liquid Limit less than 50) | | | ML | INORGANIC SILTS AND VERY FINE SANDS, SILTY OR CLAYEY FINE SANDS, SILTS WITH SLIGHT PLASTICITY |
| | | | | CL | INORGANIC CLAYS OF LOW TO MEDIUM PLASTICITY, GRAVELLY CLAYS, SANDY CLAYS, SILTY CLAYS, LEAN CLAYS |
| | | | | CL-ML | INORGANIC CLAYS-SILTS OF LOW PLASTICITY, GRAVELLY CLAYS, SANDY CLAYS, SILTY CLAYS, LEAN CLAYS |
| | | | | OL | ORGANIC SILTS & ORGANIC SILTY CLAYS OF LOW PLASTICITY |
| | SILTS AND CLAYS (Liquid Limit greater than 50) | | | MH | INORGANIC SILTS, MICACEOUS OR DIATOMACEOUS FINE SAND OR SILT |
| | | | | CH | INORGANIC CLAYS OF HIGH PLASTICITY, FAT CLAYS |
| | | | | OH | ORGANIC CLAYS & ORGANIC SILTS OF MEDIUM-TO-HIGH PLASTICITY |

KLEINFELDER
Bright People. Right Solutions.

| | |
|---|---|
| PROJECT NO.: | 137422 |
| DRAWN BY: | GW |
| CHECKED BY: | RH |
| DATE: | 11/8/2013 |
| REVISED: | |

BORING LOG KEY

Alpha Road Connector - Vitruvian Phase IV
Brookhaven Community College
Farmers Branch, Texas

BORING 3

gINT FILE: L:\gint\projects\dfw Project Logs\137422 Alpha Road Connector.gpj R:\KLF_STANDARD_GINT_LIBRARY_SR_1.2.GLB [GEO-LEGEND 1 (GRAPHICS KEY) WITH USCS]

## GRAIN SIZE

| DESCRIPTION | | SIEVE SIZE | GRAIN SIZE | APPROXIMATE SIZE |
|---|---|---|---|---|
| Boulders | | >12 in. (304.8 mm.) | >12 in. (304.8 mm.) | Larger than basketball-sized |
| Cobbles | | 3 - 12 in. (76.2 - 304.8 mm.) | 3 - 12 in. (76.2 - 304.8 mm.) | Fist-sized to basketball-sized |
| Gravel | coarse | 3/4 -3 in. (19 - 76.2 mm.) | 3/4 -3 in. (19 - 76.2 mm.) | Thumb-sized to fist-sized |
| | fine | #4 - 3/4 in. (#4 - 19 mm.) | 0.19 - 0.75 in. (4.8 - 19 mm.) | Pea-sized to thumb-sized |
| Sand | coarse | #10 - #4 | 0.079 - 0.19 in. (2 - 4.9 mm.) | Rock salt-sized to pea-sized |
| | medium | #40 - #10 | 0.017 - 0.079 in. (0.43 - 2 mm.) | Sugar-sized to rock salt-sized |
| | fine | #200 - #10 | 0.0029 - 0.017 in. (0.07 - 0.43 mm.) | Flour-sized to sugar-sized |
| Fines | | Passing #200 | <0.0029 in. (<0.07 mm.) | Flour-sized and smaller |

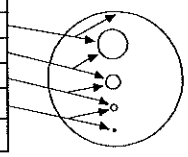

## Munsell Color

| NAME | ABBR |
|---|---|
| Red | R |
| Yellow Red | YR |
| Yellow | Y |
| Green Yellow | GY |
| Green | G |
| Blue Green | BG |
| Blue | B |
| Purple Blue | PB |
| Purple | P |
| Red Purple | RP |

## ANGULARITY

| DESCRIPTION | CRITERIA |
|---|---|
| Angular | Particles have sharp edges and relatively plane sides with unpolished surfaces |
| Subangular | Particles are similar to angular description but have rounded edges |
| Subrounded | Particles have nearly plane sides but have well-rounded corners and edges |
| Rounded | Particles have smoothly curved sides and no edges |




## PLASTICITY

| DESCRIPTION | LL | FIELD TEST |
|---|---|---|
| Non-plastic | NP | A 1/8-in. (3 mm.) thread cannot be rolled at any water content. |
| Low (L) | < 30 | The thread can barely be rolled and the lump or thread cannot be formed when drier than the plastic limit. |
| Medium (M) | 30 - 50 | The thread is easy to roll and not much time is required to reach the plastic limit. The thread cannot be rerolled after reaching the plastic limit. The lump or thread crumbles when drier than the plastic limit |
| High (H) | > 50 | It takes considerable time rolling and kneading to reach the plastic limit. The thread can be rerolled several times after reaching the plastic limit. The lump or thread can be formed without crumbling when drier than the plastic limit |

## MOISTURE CONTENT

| DESCRIPTION | FIELD TEST |
|---|---|
| Dry | Absence of moisture, dusty, dry to the touch |
| Moist | Damp but no visible water |
| Wet | Visible free water, usually soil is below water table |

## REACTION WITH HYDROCHLORIC ACID

| DESCRIPTION | FIELD TEST |
|---|---|
| None | No visible reaction |
| Weak | Some reaction, with bubbles forming slowly |
| Strong | Violent reaction, with bubbles forming immediately |

## APPARENT / RELATIVE DENSITY - COARSE-GRAINED SOIL

| APPARENT DENSITY | SPT-$N_{60}$ (# blows/ft) | MODIFIED CA SAMPLER (# blows/ft) | CALIFORNIA SAMPLER (# blows/ft) | RELATIVE DENSITY (%) |
|---|---|---|---|---|
| Very Loose | <4 | <4 | <5 | 0 - 15 |
| Loose | 4 - 10 | 5 - 12 | 5 - 15 | 15 - 35 |
| Medium Dense | 10 - 30 | 12- 35 | 15 - 40 | 35 - 65 |
| Dense | 30 - 50 | 35 - 60 | 40 - 70 | 65 - 85 |
| Very Dense | >50 | >60 | >70 | 85 - 100 |

NOTE: AFTER TERZAGHI AND PECK, 1948

## CONSISTENCY - FINE-GRAINED SOIL

| CONSISTENCY | UNCONFINED COMPRESSIVE STRENGTH (Qu)(psf) | CRITERIA |
|---|---|---|
| Very Soft | < 1000 | Thumb will penetrate soil more than 1 in. (25 mm.) |
| Soft | 1000 - 2000 | Thumb will penetrate soil about 1 in. (25 mm.) |
| Firm | 2000 < 4000 | Thumb will indent soil about 1/4-in. (6 mm.) |
| Hard | 4000 < 8000 | Thumb will not indent soil but readily indented with thumbnail |
| Very Hard | > 8000 | Thumbnail will not indent soil |

## STRUCTURE

| DESCRIPTION | CRITERIA |
|---|---|
| Stratified | Alternating layers of varying material or color with layers at least 1/4-in. thick, note thickness |
| Laminated | Alternating layers of varying material or color with the layer less than 1/4-in. thick, note thickness |
| Fissured | Breaks along definite planes of fracture with little resistance to fracturing |
| Slickensided | Fracture planes appear polished or glossy, sometimes striated |
| Blocky | Cohesive soil that can be broken down into small angular lumps which resist further breakdown |
| Lensed | Inclusion of small pockets of different soils, such as small lenses of sand scattered through a mass of clay; note thickness |
| Homogeneous | Same color and appearance throughout |

## CEMENTATION

| DESCRIPTION | FIELD TEST |
|---|---|
| Weakly | Crumbles or breaks with handling or slight finger pressure |
| Moderately | Crumbles or breaks with considerable finger pressure |
| Strongly | Will not crumble or break with finger pressure |

KLEINFELDER
*Bright People. Right Solutions.*

| | |
|---|---|
| PROJECT NO.: | 137422 |
| DRAWN BY: | GW |
| CHECKED BY: | RH |
| DATE: | 11/8/2013 |
| REVISED: | |

SOIL DESCRIPTION KEY

Alpha Road Connector - Vitruvian Phase IV
Brookhaven Community College
Farmers Branch, Texas

BORING

4

gINT FILE: L:\gint\projects\dfw Project Logs\137422 Alpha Road Connector.gpj R:\KLF_STANDARD_GINT_LIBRARY_SR.1.2.GLB [GEO-LEGEND 2 (SOIL DESCRIPTION KEY)(AUS)]

| | | | | | |
|---|---|---|---|---|---|
| **Date Begin - End:** | 11/01/2013 | **Drill Company:** | StrataBore | **BORING LOG B-01** | |
| **Logged By:** | D. Russell | **Drill Crew:** | Marcus | | |
| **Hor.-Vert. Datum:** | Not Available | **Drill Equipment:** | CME-75 | **Hammer Type - Drop:** | 140 lb. Auto - 45 in. |
| **Exploration Plunge:** | -90 degrees | **Exploration Method:** | Hollow Stem Auger | | |
| **Weather:** | | **Auger Diameter:** | 6 in. O.D. | | |

Latitude: 32.93125° N
Longitude: -96.84792° W
No Elevation Available

Surface Condition: Bare Earth

| Depth (feet) | Graphical Log | Sample Number | Sample Type | Blow Counts(BC)= Uncorr. blows/6 in. / Pocket Pen(PP)= tsf / Texas Cone(TC)= blows/6 in / RQD=% | Recovery (NR=No Recovery) | USCS Symbol | Water Content (%) | Dry Density (pcf) | Passing No.4 Sieve (%) | Passing #200 Sieve (%) | Liquid Limit (NV=No Value) | Plasticity Index (NP=No Plasticity) | Other Tests/ Remarks |
|---|---|---|---|---|---|---|---|---|---|---|---|---|---|
| | | | | **FIELD EXPLORATION** | | **LABORATORY RESULTS** | | | | | | | |
| 0 | | **Lean CLAY to Fat CLAY (CL-CH)**: dark brown to olive brown, very stiff to stiff, with calcareous nodules, fine gravel, and sand | U-1 | PP=4.0 | | | | | | | | | |
| | | | T-2 | TC=10/6" 5/6" | | | | | | | | | |
| | | | U-3 | PP=2.0 | | | 26.7 | 96 | | | | | |
| 5 | | - becoming olive brown | T-4 | TC=4/6" 4/6" | | | | | | | | | |
| | | | U-5 | PP=1.5 | | CL | 29.2 | | | 79 | 43 | 22 | |
| | | - large gravel, moist, olive brown to light brown | U-6 | PP=2.5 | | | 39.4 | 83 | | | | | |
| 10 | | | T-7 | TC=6/6" 9/6" | | | | | | | | | |
| ▽ | | - clayey gravel layer from 12 to 14 feet | | | | | | | | | | | |
| | | | U-8 | PP=4.0 | | | | | | | | | |
| 15 | | | T-9 | TC=7/6" 9/6" | | | | | | | | | |
| | | **WEATHERED SHALE**: gray to olive brown, very stiff, with iron oxide staining | U-10 | PP=3.5 | | | 22.9 | 101 | | | | | Unc. Comp. Str.= 1.68 tsf |
| 20 | | | T-11 | TC=12/6" 17/6" | | | | | | | | | |
| | | **SHALE**: dark gray, laminated | U-12 | PP=4.5 | | | | | | | | | |
| 25 | | | T-13 | TC=50/3" 50/3½" | | | | | | | | | |
| 30 | | | T-14 / C-15 | TC=50/3¾" 50/4" RQD=42 | 72% | | 14.6 | 120 | | | | | Unc. Comp. Str.= 6.47 tsf |
| 35 | | | T-16 / C-17 | TC=50/2½" 50/2" RQD=69 | 92% | | | | | | | | |
| 40 | | | T-18 / C-19 | TC=50/1½" 50/1" RQD=76 | 83% | | 17.8 | 113 | | | | | Unc. Comp. Str.= 6.75 tsf |
| | | - with interbedded limestone layer | | | | | | | | | | | |

KLEINFELDER
*Bright People. Right Solutions.*

| | |
|---|---|
| PROJECT NO.: | 137422 |
| DRAWN BY: | GW |
| CHECKED BY: | DR |
| DATE: | 11/8/2013 |
| REVISED: | |

BORING LOG B-01

Alpha Road Connector - Vitruvian Phase IV
Brookhaven Community College
Farmers Branch, Texas

BORING
B-01



gINT FILE: L:\gint\projects\dfw Project Logs\137422 Alphal Road Connector.gpj R:\KLF_STANDARD_GINT_LIBRARY_SR.1.2.GLB [KLF_BORING/TEST PIT SOIL LOG]

| | | | | | |
|---|---|---|---|---|---|
| **Date Begin - End:** | 11/01/2013 | **Drill Company:** | StrataBore | **BORING LOG B-01** | |
| **Logged By:** | D. Russell | **Drill Crew:** | Marcus | | |
| **Hor.-Vert. Datum:** | Not Available | **Drill Equipment:** | CME-75 | **Hammer Type - Drop:** | 140 lb. Auto - 45 in. |
| **Exploration Plunge:** | -90 degrees | **Exploration Method:** | Hollow Stem Auger | | |
| **Weather:** | | **Auger Diameter:** | 6 in. O.D. | | |

Latitude: 32.93125° N
Longitude: -96.84792° W
No Elevation Available

Surface Condition: Bare Earth

| Depth (feet) | Graphical Log | Sample Number | Sample Type | Blow Counts(BC)= Uncorr. blows/6 in. Pocket Pen(PP)= tsf Texas Cone(TC)= blows/6 in RQD=% | Recovery (NR=No Recovery) | USCS Symbol | Water Content (%) | Dry Density (pcf) | Passing No.4 Sieve (%) | Passing #200 Sieve (%) | Liquid Limit (NV=No Value) | Plasticity Index (NP=No Plasticity) | Other Tests/ Remarks |
|---|---|---|---|---|---|---|---|---|---|---|---|---|---|
| | | | | **SHALE**: dark gray, laminated<br>- limestone seam plugged core barrel | | | | | | | | | |
| | | T-20 | | TC=47/6"<br>50/5" | NR | | | | | | | | |
| | | C-21 | | RQD=0 | | | | | | | | | |
| | | T-22 | | TC=50/1"<br>50/¾" | | | | | | | | | |
| 50 | | C-23 | | RQD=90 | 90% | | | | | | | | |
| | | T-24 | | TC=50/3"<br>50/3½" | | | | | | | | | |
| 55 | | C-25 | | RQD=83 | 91% | | | | | | | | |
| | | T-26 | | TC=50/3"<br>50/3¼" | | | | | | | | | |
| 60 | | C-27 | | RQD=93 | 94% | | | | | | | | |
| | | | | - with interbedded limestone layer | | | | | | | | | |
| | | T-28 | | TC=50/1¼"<br>50/½" | | | | | | | | | |
| 65 | | C-29 | | RQD=95 | 95% | | | | | | | | |
| | | | | **LIMESTONE**: gray, with occasional shells | | | | | | | | | |
| | | T-30 | | TC=50/¼"<br>50/¼" | | | | | | | | | |
| 70 | | C-31 | | RQD=97 | 97% | | | | | | | | |
| | | | | **SHALE**: dark gray | | | | | | | | | |
| | | T-32 | | TC=50/1¼"<br>50/1¼" | | | | | | | | | |
| 75 | | C-33 | | RQD=96 | 98% | | | | | | | | |
| 80 | | T-34 | | TC=50/1"<br>50/½" | | | | | | | | | |
| 85 | | | | | | | | | | | | | |

The exploration was terminated at approximately 80 ft. below ground surface. The exploration was backfilled with auger cuttings on November 01, 2013.

GROUNDWATER LEVEL INFORMATION:
▽ Groundwater was encountered at 13 feet below the existing ground surface. After a 24 hour observation period, the water level was at 5 feet below existing ground surface.

GENERAL NOTES:
Boring was advanced to a depth of 30 feet prior to the use of water in the rock core drilling process.

KLEINFELDER
*Bright People. Right Solutions.*

| | |
|---|---|
| PROJECT NO.: | 137422 |
| DRAWN BY: | GW |
| CHECKED BY: | DR |
| DATE: | 11/8/2013 |
| REVISED: | |

BORING LOG B-01

Alpha Road Connector - Vitruvian Phase IV
Brookhaven Community College
Farmers Branch, Texas

BORING
B-01



GINT FILE: L:\gint\projects\dfw Project Logs\137422 Alphal Road Connector.gpj R:\KLF_STANDARD_GINT_LIBRARY_SR.1.2.GLB [KLF_BORING/TEST PIT SOIL LOG]

| | | | | | |
|---|---|---|---|---|---|
| **Date Begin - End:** | 10/29/2013 | **Drill Company:** | StrataBore | **BORING LOG B-02** | |
| **Logged By:** | D. Russell | **Drill Crew:** | Pat | | |
| **Hor.-Vert. Datum:** | Not Available | **Drill Equipment:** | CME-45 | **Hammer Type - Drop:** | 140 lb. Auto - 45 in. |
| **Exploration Plunge:** | -90 degrees | **Exploration Method:** | Hollow Stem Auger | | |
| **Weather:** | | **Auger Diameter:** | 6 in. O.D. | | |

FIELD EXPLORATION | LABORATORY RESULTS

Latitude: 32.93139° N
Longitude: -96.84795° W
No Elevation Available
Location Offset: 20 ft. East of tree line

Surface Condition: Bare Earth

| Depth (feet) | Graphical Log | Sample Number | Sample Type | Blow Counts(SPT)= Uncorr. blows/6 in. Pocket Pen(PP)= tsf Texas Cone(TC)= blows/6 in RQD=% | Recovery (NR=No Recovery) | USCS Symbol | Water Content (%) | Dry Density (pcf) | Passing No.4 Sieve (%) | Passing #200 Sieve (%) | Liquid Limit (NV=No Value) | Plasticity Index (NP=No Plasticity) | Other Tests/ Remarks |
|---|---|---|---|---|---|---|---|---|---|---|---|---|---|
| | | **Fat CLAY (CH):** brown to dark brown, hard, with fine to coarse gravel | U-1 | PP=4.5+ | | | | | | | | | |
| | | | T-2 | TC=20/6" 20/6" | | | | | | | | | |
| | | | U-3 | PP=4.5+ | | | 14.9 | 116 | | | | | |
| 5 | | | T-4 | TC=17/6" 17/6" | | | | | | | | | |
| | | - becoming olive brown to yellow brown | U-5 | PP=4.5+ | | CH | 18.6 | 109 | | 95 | 66 | 39 | |
| | | - becoming gray with manganese staining and orange sand seams | U-6 | PP=4.5+ | | | 18.4 | | | | | | Unc. Comp. Str.= 5.26 tsf |
| 10 | | | T-7 | TC=15/6" 14/6" | | | | | | | | | |
| | | **WEATHERED SHALE:** dark brown to gray, very stiff to hard, some orange staining, laminated | U-8 | PP=4.0 | | | | | | | | | |
| | | | | | | | 30.9 | | | | | | |
| 15 | | | T-9 | TC=8/6" 9/6" | | | | | | | | | |
| | | | U-10 | PP=4.5+ | | | | | | | | | |
| 20 | | - with interbedded limestone seam | T-11 | TC=50/1" 50/½" | | | | | | | | | |
| | | | C-12 | RQD=17 | 62% | | | | | | | | |
| | | **SHALE:** dark gray, with occasional shells | | | | | 21.6 | 103 | | | | | Unc. Comp. Str.= 3.38 tsf |
| 25 | | | T-13 | TC=50/2¼" 50/2½" | | | | | | | | | |
| | | | C-14 | RQD=87 | 94% | | | | | | | | |
| 30 | | | T-15 | TC=50/1½" 50/1½" | | | | | | | | | |
| | | | C-16 | RQD=86 | 114% | | | | | | | | |
| 35 | | | T-17 | TC=50/2" 50/¼" | | | 11.2 | 128 | | | | | Unc. Comp. Str.= 9.85 tsf |
| | | | C-18 | RQD=19 | 82% | | | | | | | | |
| | | | T-19 | TC=50/5" 50/6" | | | | | | | | | |
| 40 | | | C-20 | RQD=74 | 91% | | | | | | | | |
| | | - with interbedded limestone seam | | | | | | | | | | | |

KLEINFELDER
*Bright People. Right Solutions.*

| | |
|---|---|
| PROJECT NO.: | 137422 |
| DRAWN BY: | GW |
| CHECKED BY: | DR |
| DATE: | 11/8/2013 |
| REVISED: | |

BORING LOG B-02

Alpha Road Connector - Vitruvian Phase IV
Brookhaven Community College
Farmers Branch, Texas

**BORING**

B-02



gINT FILE: L:\gint\projects\dfw Project Logs\137422 Alphal Road Connector.gpj R:\KLF_STANDARD_GINT_LIBRARY_SR.1.2.GLB [KLF_BORING/TEST PIT SOIL LOG]

| | | | | | |
|---|---|---|---|---|---|
| **Date Begin - End:** | 10/29/2013 | **Drill Company:** | StrataBore | **BORING LOG B-02** | |
| **Logged By:** | D. Russell | **Drill Crew:** | Pat | | |
| **Hor.-Vert. Datum:** | Not Available | **Drill Equipment:** | CME-45 | **Hammer Type - Drop:** | 140 lb. Auto - 45 in. |
| **Exploration Plunge:** | -90 degrees | **Exploration Method:** | Hollow Stem Auger | | |
| **Weather:** | | **Auger Diameter:** | 6 in. O.D. | | |

FIELD EXPLORATION | LABORATORY RESULTS

Latitude: 32.93139° N
Longitude: -96.84795° W
No Elevation Available
Location Offset: 20 ft. East of tree line

Surface Condition: Bare Earth

| Depth (feet) | Graphical Log | Sample Number | Sample Type | Blow Counts(BC)= Uncorr. blows/6 in. Pocket Pen(PP)= tsf Texas Cone(TC)= blows/6 in RQD=% | Recovery (NR=No Recovery) | USCS Symbol | Water Content (%) | Dry Density (pcf) | Passing No.4 Sieve (%) | Passing #200 Sieve (%) | Liquid Limit (NV=No Value) | Plasticity Index (NP=No Plasticity) | Other Tests/ Remarks |
|---|---|---|---|---|---|---|---|---|---|---|---|---|---|
| | | **SHALE**: dark gray, with occasional shells | T-21 | TC=50/¾" 50/¼" RQD=72 | 72% | | | | | | | | |
| | | | C-22 | | | | | | | | | | |
| 50 | | | T-23 | TC=50/3½" 50/¾" RQD=71 | | | | | | | | | |
| | | | C-24 | | 71% | | | | | | | | |
| | | | T-25 | TC=50/2¾" 50/3¼" RQD=40 | | | | | | | | | |
| 55 | | | C-26 | | 40% | | | | | | | | |
| 60 | | **LIMESTONE**: gray, with occasional shells, with interbedded shale layers | T-27 | TC=50/1¾" 50/1¼" RQD=93 | | | | | | | | | |
| | | | C-28 | | 93% | | | | | | | | |
| 65 | | | T-29 | TC=50/¾" 50/½" RQD=94 | | | | | | | | | |
| | | | C-30 | | 94% | | | | | | | | |
| | | **SHALE**: dark gray, hard, sandy, with shells | T-31 | TC=50/1½" 50/¾" RQD=96 | | | | | | | | | |
| 70 | | | C-32 | | 95% | | | | | | | | |
| | | | T-33 | TC=50/1¼" 50/1" RQD=98 | | | | | | | | | |
| 75 | | | C-34 | | 98% | | | | | | | | |
| | | | T-35 | TC=50/1" 50/1" | | | | | | | | | |
| 80 | | | | | | | | | | | | | |
| 85 | | | | | | | | | | | | | |

The exploration was terminated at approximately 80 ft. below ground surface. The exploration was backfilled with auger cuttings on October 29, 2013.

GROUNDWATER LEVEL INFORMATION:
▼ Groundwater was not encountered during drilling operations/at completion. a 24 hour observation period, the water level was at 5 feet below existing ground surface.

GENERAL NOTES:
Boring was advanced to a depth of 20 feet prior to the use of water in the rock core drilling process.

KLEINFELDER
Bright People. Right Solutions.

| | |
|---|---|
| PROJECT NO.: | 137422 |
| DRAWN BY: | GW |
| CHECKED BY: | DR |
| DATE: | 11/8/2013 |
| REVISED: | |

BORING LOG B-02

Alpha Road Connector - Vitruvian Phase IV
Brookhaven Community College
Farmers Branch, Texas

BORING
B-01
PAGE: 2 of 2

gINT FILE: L:\gint\projects\dfw Project Logs\137422 Alphal Road Connector.gpj R:\KLF_STANDARD_GINT_LIBRARY_SR.1.2.GLB [KLF_BORING/TEST PIT SOIL LOG]

| | | | | | |
|---|---|---|---|---|---|
| **Date Begin - End:** | 11/05/2013 | **Drill Company:** | StrataBore | **BORING LOG B-03** | |
| **Logged By:** | D. Russell | **Drill Crew:** | Marcus | | |
| **Hor.-Vert. Datum:** | Not Available | **Drill Equipment:** | CME-75 | **Hammer Type - Drop:** | 140 lb. Auto - 45 in. |
| **Exploration Plunge:** | -90 degrees | **Exploration Method:** | Hollow Stem Auger | | |
| **Weather:** | | **Auger Diameter:** | 6 in. O.D. | | |

Latitude: 32.93185° N
Longitude: -96.84804° W
No Elevation Available
Location Offset: 40 ft. Northwest of Stake

Surface Condition: Bare Earth

| Depth (feet) | Graphical Log | Sample Number | Sample Type | Blow Counts(SC)= Uncorr. blows/6 in. | Pocket Pen(PP)= tsf Texas Cone(TC)= blows/6 in RQD=% | Recovery (NR=No Recovery) | USCS Symbol | Water Content (%) | Dry Density (pcf) | Passing No.4 Sieve (%) | Passing #200 Sieve (%) | Liquid Limit (NV=No Value) | Plasticity Index (NP=No Plasticity) | Other Tests/ Remarks |
|---|---|---|---|---|---|---|---|---|---|---|---|---|---|---|
| | | **Fat CLAY (CH):** brown to dark brown, hard, with calcareous nodules, coarse to fine gravel, and sand | U-1 | | PP=4.5+ | | | | | | | | | |
| | | | T-2 | | TC=14/6" 14/6" | | | | | | | | | |
| | | | U-3 | | PP=4.5+ | | CH | 18.9 | 107 | | 81 | 58 | 32 | |
| 5 | | | T-4 | | TC=12/6" 12/6" | | | | | | | | | |
| | | | | | | | | 21.2 | 102 | | | | | Unc. Comp. Str.= 7.06 tsf |
| | | | U-5 | | PP=4.5+ | | | 22.0 | | | | | | |
| | | - becoming brownish gray, slickensided, iron oxide staining | U-6 | | PP=4.5 | | | 25.0 | 98 | | | | | |
| 10 | | | T-7 | | TC=2/6" 4/6" | | | | | | | | | |
| | | - with coarse gravel seam | U-8 | | PP=3.0 | | | 24.5 | | | | | | |
| 15 | | | T-9 | | TC=13/6" 12/6" | | | | | | | | | |
| | | **WEATHERED SHALE:** dark gray, laminated | U-10 | | PP=4.5+ | | | | | | | | | |
| 20 | | | T-11 | | TC=50/5" 50/5½" | | | | | | | | | |
| | | | T-12 | | TC=50/4" 50/3½" | | | | | | | | | |
| 25 | | **SHALE:** gray to dark gray, stiff to hard, sandy | C-13 | | RQD=98 | 98% | | 14.2 | 121 | | | | | Unc. Comp. Str.= 13.53 tsf |
| | | | T-14 | | TC=50/6" 50/2" | | | | | | | | | |
| 30 | | | C-15 | | RQD=100 | 100% | | | | | | | | |
| | | | T-16 | | TC=50/1½" 50/1¼" | | | | | | | | | |
| 35 | | | C-17 | | RQD=39 | 48% | | 18.5 | 113 | | | | | Unc. Comp. Str.= 6.13 tsf |
| | | - limestone seam plugged core barrel | | | | | | | | | | | | |
| | | | T-18 | | TC=50/3¼" 50/4" | | | | | | | | | |
| 40 | | | C-19 | | RQD=0 | 50% | | | | | | | | |

KLEINFELDER
*Bright People. Right Solutions.*

| | |
|---|---|
| PROJECT NO.: | 137422 |
| DRAWN BY: | GW |
| CHECKED BY: | DR |
| DATE: | 11/8/2013 |
| REVISED: | |

BORING LOG B-03

Alpha Road Connector - Vitruvian Phase IV
Brookhaven Community College
Farmers Branch, Texas

BORING
B-03



gINT FILE: L:\gint\projects\dfw Project Logs\137422 Alphal Road Connector.gpj R:\KLF_STANDARD_GINT_LIBRARY_SR.1.2.GLB [KLF_BORING/TEST PIT SOIL LOG]

| | | | | | |
|---|---|---|---|---|---|
| **Date Begin - End:** | 11/05/2013 | **Drill Company:** | StrataBore | **BORING LOG B-03** | |
| **Logged By:** | D. Russell | **Drill Crew:** | Marcus | | |
| **Hor.-Vert. Datum:** | Not Available | **Drill Equipment:** | CME-75 | **Hammer Type - Drop:** | 140 lb. Auto - 45 in. |
| **Exploration Plunge:** | -90 degrees | **Exploration Method:** | Hollow Stem Auger | | |
| **Weather:** | | **Auger Diameter:** | 6 in. O.D. | | |

FIELD EXPLORATION | LABORATORY RESULTS

Latitude: 32.93185° N
Longitude: -96.84804° W
No Elevation Available
Location Offset: 40 ft. Northwest of Stake

Surface Condition: Bare Earth

| Depth (feet) | Graphical Log | Sample Number | Sample Type | Blow Counts(SC)= Uncorr. blows/6 in. | Pocket Pen(PP)= tsf Texas Cone(TC)= blows/6 in RQD=% | Recovery (NR=No Recovery) | USCS Symbol | Water Content (%) | Dry Density (pcf) | Passing No.4 Sieve (%) | Passing #200 Sieve (%) | Liquid Limit (NV=No Value) | Plasticity Index (NP=No Plasticity) | Other Tests/ Remarks |
|---|---|---|---|---|---|---|---|---|---|---|---|---|---|---|
| | | **SHALE**: gray to dark gray, stiff to hard, sandy - with interbedded limestone layer | | | | | | | | | | | | |
| | | T-20 | | | TC=50/1½" 50/1" | 87% | | | | | | | | |
| | | C-21 | | | RQD=87 | | | | | | | | | |
| 50 | | T-22 | | | TC=50/1¼" 50/1¼" | 88% | | | | | | | | |
| | | C-23 | | | RQD=88 | | | | | | | | | |
| 55 | | T-24 | | | TC=50/1¼" 50/1" | 100% | | | | | | | | |
| | | C-25 | | | RQD=100 | | | | | | | | | |
| 60 | | T-26 | | | TC=50/1¼" 50/1" | | | | | | | | | |
| 65 | | | | | | | | | | | | | | |
| 70 | | | | | | | | | | | | | | |
| 75 | | | | | | | | | | | | | | |
| 80 | | | | | | | | | | | | | | |
| 85 | | | | | | | | | | | | | | |

The exploration was terminated at approximately 60 ft. below ground surface. The exploration was backfilled with auger cuttings on November 05, 2013.

GROUNDWATER LEVEL INFORMATION:
Groundwater was not encountered during drilling or after completion.

GENERAL NOTES:
Boring was advanced to a depth of 25 feet prior to the use of water in the rock core drilling process.



gINT FILE: L:\gint\projects\dfw Project Logs\137422 Alphal Road Connector.gpj R:\KLF_STANDARD_GINT_LIBRARY_SR.1.2.GLB [KLF_BORING/TEST PIT SOIL LOG]

| | | | | | |
|---|---|---|---|---|---|
| **Date Begin - End:** | 11/04/2013 | **Drill Company:** | StrataBore | **BORING LOG B-04** | |
| **Logged By:** | D. Russell | **Drill Crew:** | Marcus | | |
| **Hor.-Vert. Datum:** | Not Available | **Drill Equipment:** | CME-75 | **Hammer Type - Drop:** | 140 lb. Auto - 45 in. |
| **Exploration Plunge:** | -90 degrees | **Exploration Method:** | Hollow Stem Auger | | |
| **Weather:** | | **Auger Diameter:** | 6 in. O.D. | | |

Latitude: 32.93200° N
Longitude: -96.84802° W
No Elevation Available

Surface Condition: Bare Earth

| Depth (feet) | Graphical Log | Sample Number | Sample Type | Blow Counts(BC)= Uncorr. blows/6 in. Pocket Pen(PP)= tsf Texas Cone(TC)= blows/6 in RQD=% | Recovery (NR=No Recovery) | USCS Symbol | Water Content (%) | Dry Density (pcf) | Passing No.4 Sieve (%) | Passing #200 Sieve (%) | Liquid Limit (NV=No Value) | Plasticity Index (NP=No Plasticity) | Other Tests/ Remarks |
|---|---|---|---|---|---|---|---|---|---|---|---|---|---|
| | | | | **FIELD EXPLORATION** | | **LABORATORY RESULTS** | | | | | | | |
| 0 | | **Fat CLAY (CH):** dark brown to olive brown, hard, with calcareous nodules and coarse to fine gravel | U-1 | PP=4.5+ | | | | | | | | | |
| | | | T-2 | TC=11/6" 9/6" | | | | | | | | | |
| | | - becoming olive brown | U-3 | PP=4.5+ | | CH | 16.8 | | | 90 | 65 | 40 | |
| 5 | | | T-4 | TC=7/6" 14/6" | | | | | | | | | |
| | | | U-5 | PP=4.5+ | | | 19.1 | 107 | | | | | |
| | | - iron oxide staining | U-6 | PP=4.5+ | | | 18.8 | | | | | | Unc. Comp. Str.= 8.79 tsf |
| 10 | | | T-7 | TC=14/6" 20/6" | | | | | | | | | |
| 15 | | **WEATHERED SHALE:** dark gray, laminated, with iron oxide staining, slickensided | U-8 | PP=4.5+ | | | 20.7 | 107 | | | | | Unc. Comp. Str.= 5.15 tsf |
| | | | T-9 | TC=47/6" 50/6" | | | | | | | | | |
| 20 | | **SHALE:** dark gray, stiff to hard, with interbedded limestone seams and occasional shells | T-10 | TC=50/5" 50/3" | | | | | | | | | |
| | | | C-11 | RQD=81 | 81% | | | | | | | | |
| 25 | | | T-12 | TC=50/1½" 50/1¼" | | | | | | | | | |
| | | | C-13 | RQD=96 | 96% | | | | | | | | |
| 30 | | | T-14 | TC=50/1" 50/1½" | | | | | | | | | |
| | | | C-15 | RQD=93 | 93% | | | | | | | | |
| 35 | | | T-16 | TC=50/1" 50/1" | | | 17.8 | 112 | | | | | Unc. Comp. Str.= 5.55 tsf |
| | | | C-17 | RQD=62 | 92% | | | | | | | | |
| 40 | | | T-18 | TC=50/4" 50/3" | | | | | | | | | |
| | | | C-19 | RQD=94 | 94% | | | | | | | | |

KLEINFELDER
*Bright People. Right Solutions.*

| | |
|---|---|
| PROJECT NO.: | 137422 |
| DRAWN BY: | GW |
| CHECKED BY: | DR |
| DATE: | 11/8/2013 |
| REVISED: | |

BORING LOG B-04

Alpha Road Connector - Vitruvian Phase IV
Brookhaven Community College
Farmers Branch, Texas

BORING
B-04



gINT FILE: L:\gint\projects\dfw Project Logs\137422 Alphal Road Connector.gpj R:\KLF_STANDARD_GINT_LIBRARY_SR.1.2.GLB [KLF_BORING/TEST PIT SOIL LOG]

| | | | | | |
|---|---|---|---|---|---|
| **Date Begin - End:** | 11/04/2013 | **Drill Company:** | StrataBore | **BORING LOG B-04** | |
| **Logged By:** | D. Russell | **Drill Crew:** | Marcus | | |
| **Hor.-Vert. Datum:** | Not Available | **Drill Equipment:** | CME-75 | **Hammer Type - Drop:** | 140 lb. Auto - 45 in. |
| **Exploration Plunge:** | -90 degrees | **Exploration Method:** | Hollow Stem Auger | | |
| **Weather:** | | **Auger Diameter:** | 6 in. O.D. | | |

FIELD EXPLORATION | LABORATORY RESULTS

Latitude: 32.93200° N
Longitude: -96.84802° W
No Elevation Available

Surface Condition: Bare Earth

| Depth (feet) | Graphical Log | Sample Number | Sample Type | Blow Counts(BC)= Uncorr. blows/6 in. Pocket Pen(PP)= tsf Texas Cone(TC)= blows/6 in RQD=% | Recovery (NR=No Recovery) | USCS Symbol | Water Content (%) | Dry Density (pcf) | Passing No.4 Sieve (%) | Passing #200 Sieve (%) | Liquid Limit (NV=No Value) | Plasticity Index (NP=No Plasticity) | Other Tests/ Remarks |
|---|---|---|---|---|---|---|---|---|---|---|---|---|---|
| | | T-20 | | TC=50/1¼" | 91% | | | | | | | | |
| | | C-21 | | 50/½" RQD=91 | | | | | | | | | |
| 50 | | T-22 | | TC=50/2" | 98% | | | | | | | | |
| | | C-23 | | 50/1" RQD=98 | | | | | | | | | |
| 55 | | T-24 | | TC=50/1¼" | 82% | | | | | | | | |
| | | C-25 | | 50/1½" RQD=82 | | | | | | | | | |
| 60 | | T-26 | | TC=50/2¼" | 95% | | | | | | | | |
| | | C-27 | | 50/1½" RQD=95 | | | | | | | | | |
| 65 | | T-28 | | TC=50/¾" | 9362% | | | | | | | | |
| | | C-29 | | 50/½" RQD=94 | | | | | | | | | |
| 70 | | T-30 | | TC=50/1¼" | 89% | | | | | | | | |
| | | C-31 | | 50/1" RQD=89 | | | | | | | | | |
| 75 | | T-32 | | TC=50/1¼" | 80% | | | | | | | | |
| | | C-33 | | 50/¾" RQD=80 | | | | | | | | | |
| 80 | | T-34 | | TC=50/1" 50/¾" | | | | | | | | | |
| 85 | | | | | | | | | | | | | |

**SHALE**: dark gray, stiff to hard, with interbedded limestone seams and occasional shells

**LIMESTONE**: gray, hard, pitted

**SHALE**: dark gray, with occasional shells

The exploration was terminated at approximately 80 ft. below ground surface. The exploration was backfilled with auger cuttings on November 04, 2013.

GROUNDWATER LEVEL INFORMATION:
▼ Groundwater was not encountered during drilling operations or at completion. a 24 hour observation period, the boring was dry.

GENERAL NOTES:
Boring was advanced to a depth of 25 feet prior to the use of water in the rock core drilling process.

KLEINFELDER
Bright People. Right Solutions.

| | |
|---|---|
| PROJECT NO.: | 137422 |
| DRAWN BY: | GW |
| CHECKED BY: | DR |
| DATE: | 11/8/2013 |
| REVISED: | |

BORING LOG B-04

Alpha Road Connector - Vitruvian Phase IV
Brookhaven Community College
Farmers Branch, Texas

BORING
B-04
PAGE: 2 of 2

gINT FILE: L:\gint\projects\dfw Project Logs\137422 Alphal Road Connector.gpj R:\KLF_STANDARD_GINT_LIBRARY_SR.1.2.GLB [KLF_BORING/TEST PIT SOIL LOG]

| | | | | | |
|---|---|---|---|---|---|
| **Date Begin - End:** | 10/29/2013 | **Drill Company:** | StrataBore | **BORING LOG C-01** | |
| **Logged By:** | D. Russell | **Drill Crew:** | Marcus | | |
| **Hor.-Vert. Datum:** | Not Available | **Drill Equipment:** | CME-45 | **Hammer Type - Drop:** | 140 lb. Auto - 30 in. |
| **Exploration Plunge:** | -90 degrees | **Exploration Method:** | Hollow Stem Auger | | |
| **Weather:** | | **Auger Diameter:** | 6 in. O.D. | | |

Latitude: 32.93141° N
Longitude: -96.84794° W
No Elevation Available

Surface Condition: Bare Earth

| Depth (feet) | Graphical Log | Sample Number | Sample Type | Blow Counts(BC)= Uncorr. blows/6 in. | Pocket Pen(PP)= tsf Texas Cone(TC)= blows/6 in RQD=% | Recovery (NR=No Recovery) | USCS Symbol | Water Content (%) | Dry Density (pcf) | Passing No.4 Sieve (%) | Passing #200 Sieve (%) | Liquid Limit (NV=No Value) | Plasticity Index (NP=No Plasticity) | Other Tests/ Remarks |
|---|---|---|---|---|---|---|---|---|---|---|---|---|---|---|
| | | **Fat CLAY to Lean CLAY (CL-CH):** dark brown to olive brown, very stiff to soft, with calcareous nodules and gravel | U-1 | | PP=3.5 | | | | | | | | | |
| | | | U-2 | | PP=3.0 | | | | | | | | | |
| | | | U-3 | | PP=2.5 | | | | | | | | | |
| ▽ 5 | | - friable, olive brown to yellow brown | U-4 | | PP=0.5 | | | | | | | | | |
| | | - pale brown, with coarse to fine gravel and sand seams | U-5 | | PP=1.5 | | SC | 24.2 | 107 | | 36 | 43 | 21 | Unc. Comp. Str.= 0.84 tsf |
| 10 | | | | | | | | | | | | | | |
| | | **Lean CLAY with gravel (CL):** light brown, gray, hard, high amount of gravel | U-6 | | PP= – | | | | | | | | | |
| 15 | | | S-7 | | BC=12<br>27<br>28 | | | | | | | | | |
| | | **WEATHERED SHALE:** dark gray to light gray, with iron oxide staining, laminated | U-8 | | PP=4.5 | | | | | | | | | |
| 20 | | | | | | | | | | | | | | |
| | | | U-9 | | PP=4.5+ | | | | | | | | | |
| 25 | | | | | | | | | | | | | | |

The exploration was terminated at approximately 25 ft. below ground surface. The exploration was backfilled with auger cuttings on October 29, 2013.

GROUNDWATER LEVEL INFORMATION:
▽ Groundwater was encountered at 5 feet below the existing ground surface. After a 24 hour observation period, the water level was at 6 feet below existing ground surface.
GENERAL NOTES:
Boring drilled at stake

KLEINFELDER
Bright People. Right Solutions.

| | |
|---|---|
| PROJECT NO.: | 137422 |
| DRAWN BY: | GW |
| CHECKED BY: | DR |
| DATE: | 11/8/2013 |
| REVISED: | |

BORING LOG C-01

Alpha Road Connector - Vitruvian Phase IV
Brookhaven Community College
Farmers Branch, Texas

BORING
C-01
PAGE: 1 of 1

gINT FILE: L:\gint\projects\dfw Project Logs\137422 Alpha Road Connector.gpj R:\KLF_STANDARD_GINT_LIBRARY_SR.1.2.GLB [KLF_BORING/TEST PIT SOIL LOG]

| | | | | | |
|---|---|---|---|---|---|
| **Date Begin - End:** | 10/29/2013 | **Drill Company:** | StrataBore | **BORING LOG C-02** | |
| **Logged By:** | D. Russell | **Drill Crew:** | Marcus | | |
| **Hor.-Vert. Datum:** | Not Available | **Drill Equipment:** | CME-45 | **Hammer Type - Drop:** | 140 lb. Auto - 30 in. |
| **Exploration Plunge:** | -90 degrees | **Exploration Method:** | Hollow Stem Auger | | |
| **Weather:** | | **Auger Diameter:** | 6 in. O.D. | | |

Latitude: 32.93256° N
Longitude: -96.85580° W
No Elevation Available

Surface Condition: Bare Earth

| Depth (feet) | Graphical Log | Sample Number | Sample Type | Blow Counts(BC)= Uncorr. blows/6 in. Pocket Pen(PP)= tsf Texas Cone(TC)= blows/6 in RQD=% | Recovery (NR=No Recovery) | USCS Symbol | Water Content (%) | Dry Density (pcf) | Passing No.4 Sieve (%) | Passing #200 Sieve (%) | Liquid Limit (NV=No Value) | Plasticity Index (NP=No Plasticity) | Other Tests/ Remarks |
|---|---|---|---|---|---|---|---|---|---|---|---|---|---|
| | | | | **Fat CLAY (CH):** dark brown, hard, with occasional calcareous nodules | | | | | | | | | |
| | | U-1 | | PP=4.5+ | | | | | | | | | |
| | | U-2 | | PP=4.5+ | | | 34.1 | | | | | | |
| | | | | **Lean CLAY (CL):** light grayish brown to light brown, hard, with gravel and sand seams | | | | | | | | | |
| 5 | | S-3 | | BC=14<br>14<br>25 | | SC | 12.6 | | | 38 | 41 | 21 | |
| | | S-4 | | BC=50/4" | | | | | | | | | |
| | | | | **WEATHERED LIMESTONE:** light brown to brown, with clay seams | | | | | | | | | |
| | | T-5 | | TC=50/2"<br>50/2" | | | | | | | | | |
| 10 | | | | **LIMESTONE:** gray | | | | | | | | | |
| | | T-6 | | TC=50/½"<br>50/½" | | | | | | | | | |
| 15 | | | | | | | | | | | | | |
| | | T-7 | | TC=50/¾"<br>50/½" | | | | | | | | | |
| 20 | | | | | | | | | | | | | |
| | | T-8 | | TC=50/½"<br>50/¼" | | | | | | | | | |
| 25 | | | | | | | | | | | | | |

The exploration was terminated at approximately 25 ft. below ground surface. The exploration was backfilled with auger cuttings on October 29, 2013.

GROUNDWATER LEVEL INFORMATION:
Groundwater was not encountered during drilling or after completion.
GENERAL NOTES:
Boring drilled at stake

KLEINFELDER
Bright People. Right Solutions.

| | |
|---|---|
| PROJECT NO.: | 137422 |
| DRAWN BY: | GW |
| CHECKED BY: | DR |
| DATE: | 11/8/2013 |
| REVISED: | |

BORING LOG C-02

Alpha Road Connector - Vitruvian Phase IV
Brookhaven Community College
Farmers Branch, Texas

BORING
C-02
PAGE: 1 of 1

gINT FILE: L:\gint\projects\dfw Project Logs\137422 Alphal Road Connector.gpj R:\KLF_STANDARD_GINT_LIBRARY_SR.1.2.GLB [KLF_BORING/TEST PIT SOIL LOG]

| | | | | | |
|---|---|---|---|---|---|
| **Date Begin - End:** | 10/29/2013 | **Drill Company:** | StrataBore | **BORING LOG P-01** | |
| **Logged By:** | D. Russell | **Drill Crew:** | Marcus | | |
| **Hor.-Vert. Datum:** | Not Available | **Drill Equipment:** | CME-45 | **Hammer Type - Drop:** | 140 lb. Auto - 30 in. |
| **Exploration Plunge:** | -90 degrees | **Exploration Method:** | Hollow Stem Auger | | |
| **Weather:** | | **Auger Diameter:** | 6 in. O.D. | | |

Latitude: 32.93256° N
Longitude: -96.84558° W
No Elevation Available

Surface Condition: Bare Earth

| Depth (feet) | Graphical Log | Sample Number | Sample Type | Blow Counts(SC)= Uncorr. blows/6 in. Pocket Pen(PP)= tsf Texas Cone(TC)= blows/6 in RQD=% | Recovery (NR=No Recovery) | USCS Symbol | Water Content (%) | Dry Density (pcf) | Passing No.4 Sieve (%) | Passing #200 Sieve (%) | Liquid Limit (NV=No Value) | Plasticity Index (NP=No Plasticity) | Other Tests/ Remarks |
|---|---|---|---|---|---|---|---|---|---|---|---|---|---|
| 0 | | **Fat CLAY (CH):** dark brown, hard, with limestone fragments | U-1 | PP=4.5+ | | | | | | | | | |
| | | | U-2 | PP=4.5+ | | CH | 11.5 | | | 95 | 71 | 44 | |
| | | **WEATHERED LIMESTONE:** light brownish gray to light brown, with clay | S-3 | BC=35 50/4" | | | | | | | | | |
| 5 | | | T-4 | TC=50/1" 50/¾" | | | | | | | | | |
| | | - becoming brownish gray | T-5 | TC=50 | | | | | | | | | |
| 10 | | | | | | | | | | | | | |
| 15 | | | | | | | | | | | | | |
| 20 | | | | | | | | | | | | | |
| 25 | | | | | | | | | | | | | |

The exploration was terminated at approximately 10 ft. below ground surface. The exploration was backfilled with auger cuttings on October 29, 2013.

GROUNDWATER LEVEL INFORMATION:
Groundwater was not encountered during drilling or after completion.

GENERAL NOTES:
Boring drilled at stake

KLEINFELDER
Bright People. Right Solutions.

| | |
|---|---|
| PROJECT NO.: | 137422 |
| DRAWN BY: | GW |
| CHECKED BY: | DR |
| DATE: | 11/8/2013 |
| REVISED: | |

BORING LOG P-01

Alpha Road Connector - Vitruvian Phase IV
Brookhaven Community College
Farmers Branch, Texas

BORING
P-01
PAGE: 1 of 1

gINT FILE: L:\gint\projects\dfw Project Logs\137422 Alpha Road Connector.gpj R:\KLF_STANDARD_GINT_LIBRARY_SR.1.2.GLB [KLF_BORING/TEST PIT SOIL LOG]

| | | | | | |
|---|---|---|---|---|---|
| **Date Begin - End:** | 10/29/2013 | **Drill Company:** | StrataBore | **BORING LOG P-02** | |
| **Logged By:** | D. Russell | **Drill Crew:** | Marcus | | |
| **Hor.-Vert. Datum:** | Not Available | **Drill Equipment:** | CME-45 | **Hammer Type - Drop:** | 140 lb. Auto - 30 in. |
| **Exploration Plunge:** | -90 degrees | **Exploration Method:** | Hollow Stem Auger | | |
| **Weather:** | | **Auger Diameter:** | 6 in. O.D. | | |

| Depth (feet) | Graphical Log | FIELD EXPLORATION | Sample Number | Sample Type | Blow Counts(SPT)= Uncorr. blows/6 in. | Pocket Pen(PP)= tsf | Texas Cone(TC)= blows/6 in RQD=% | Recovery (NR=No Recovery) | LABORATORY RESULTS: USCS Symbol | Water Content (%) | Dry Density (pcf) | Passing No.4 Sieve (%) | Passing #200 Sieve (%) | Liquid Limit (NV=No Value) | Plasticity Index (NP=No Plasticity) | Other Tests/ Remarks |
|---|---|---|---|---|---|---|---|---|---|---|---|---|---|---|---|---|
| | | Latitude: 32.93244° N<br>Longitude: -96.84703° W<br>No Elevation Available<br><br>Surface Condition: Bare Earth | | | | | | | | | | | | | | |
| | | **Fat CLAY (CH):** dark brown to dark grayish brown, hard to very stiff, with fine gravel and sand seams | U-1 | | | PP=4.0 | | | | 30.5 | | | | | | |
| | | | U-2 | | | PP=4.5+ | | | CH | 14.0 | | | 67 | 57 | 34 | |
| 5 | | | U-3 | | | PP=4.5+ | | | | 17.2 | | | | | | |
| | | | U-4 | | | PP=3.5 | | | | 23.5 | | | | | | |
| | | - becoming olive brown | U-5 | | | PP=2.0 | | | | | | | | | | |
| 10 | | | | | | | | | | | | | | | | |
| 15 | | | | | | | | | | | | | | | | |
| 20 | | | | | | | | | | | | | | | | |
| 25 | | | | | | | | | | | | | | | | |

The exploration was terminated at approximately 10 ft. below ground surface. The exploration was backfilled with auger cuttings on October 29, 2013.

GROUNDWATER LEVEL INFORMATION:
Groundwater was not encountered during drilling or after completion.
GENERAL NOTES:
Boring drilled at stake

KLEINFELDER
Bright People. Right Solutions.

| | |
|---|---|
| PROJECT NO.: | 137422 |
| DRAWN BY: | GW |
| CHECKED BY: | DR |
| DATE: | 11/8/2013 |
| REVISED: | |

BORING LOG P-02

Alpha Road Connector - Vitruvian Phase IV
Brookhaven Community College
Farmers Branch, Texas

BORING
P-02
PAGE: 1 of 1

gINT FILE: L:\glot\projects\dfw Project Logs\137422 Alpha Road Connector.gpj R:\KLF_STANDARD_GINT_LIBRARY_SR.1.2.GLB [KLF_BORING/TEST PIT SOIL LOG]

| | | | | | |
|---|---|---|---|---|---|
| **Date Begin - End:** | 10/29/2013 | **Drill Company:** | StrataBore | **BORING LOG P-03** | |
| **Logged By:** | D. Russell | **Drill Crew:** | Marcus | | |
| **Hor.-Vert. Datum:** | Not Available | **Drill Equipment:** | CME-45 | **Hammer Type - Drop:** | 140 lb. Auto - 30 in. |
| **Exploration Plunge:** | -90 degrees | **Exploration Method:** | Hollow Stem Auger | | |
| **Weather:** | | **Auger Diameter:** | 6 in. O.D. | | |

| Depth (feet) | Graphical Log | FIELD EXPLORATION | Sample Number | Sample Type | Blow Counts(BC)= Uncorr. blows/6 in. | Pocket Pen(PP)= tsf Texas Cone(TC)= blows/6 in RQD=% | Recovery (NR=No Recovery) | LABORATORY RESULTS: USCS Symbol | Water Content (%) | Dry Density (pcf) | Passing No.4 Sieve (%) | Passing #200 Sieve (%) | Liquid Limit (NV=No Value) | Plasticity Index (NP=No Plasticity) | Other Tests/ Remarks |
|---|---|---|---|---|---|---|---|---|---|---|---|---|---|---|---|
| | | Latitude: 32.93258° N<br>Longitude: -96.84789° W<br>No Elevation Available<br>Surface Condition: Bare Earth | | | | | | | | | | | | | |
| | | **Fat CLAY (CH):** dark brown to dark brownish gray, hard, with fine gravel | U-1 | | | PP=2.5 | | CH | 31.5 | | | 91 | 63 | 34 | |
| | | | U-2 | | | PP=4.5+ | | | 22.2 | | | | | | |
| 5 | | | U-3 | | | PP=4.5+ | | | 24.8 | | | | | | |
| | | | U-4 | | | PP=4.5+ | | | 23.1 | | | | | | |
| | | - becoming olive brown, some gray | U-5 | | | PP=4.5+ | | | | | | | | | |
| 10 | | | | | | | | | | | | | | | |
| 15 | | | | | | | | | | | | | | | |
| 20 | | | | | | | | | | | | | | | |
| 25 | | | | | | | | | | | | | | | |

The exploration was terminated at approximately 10 ft. below ground surface. The exploration was backfilled with auger cuttings on October 29, 2013.

GROUNDWATER LEVEL INFORMATION:
Groundwater was not encountered during drilling or after completion.
GENERAL NOTES:
Boring drilled at stake

KLEINFELDER
Bright People. Right Solutions.

| | |
|---|---|
| PROJECT NO.: | 137422 |
| DRAWN BY: | GW |
| CHECKED BY: | DR |
| DATE: | 11/8/2013 |
| REVISED: | |

BORING LOG P-03

Alpha Road Connector - Vitruvian Phase IV
Brookhaven Community College
Farmers Branch, Texas

BORING
P-03
PAGE: 1 of 1

gINT FILE: L:\gint\projects\dfw Project Logs\137422 Alphal Road Connector.gpj R:\KLF_STANDARD_GINT_LIBRARY_SR.1.2.GLB [KLF_BORING/TEST PIT SOIL LOG]

| | | | | | |
|---|---|---|---|---|---|
| **Date Begin - End:** | 10/29/2013 | **Drill Company:** | StrataBore | **BORING LOG P-04** | |
| **Logged By:** | D. Russell | **Drill Crew:** | Marcus | | |
| **Hor.-Vert. Datum:** | Not Available | **Drill Equipment:** | CME-45 | **Hammer Type - Drop:** | 140 lb. Auto - 30 in. |
| **Exploration Plunge:** | -90 degrees | **Exploration Method:** | Hollow Stem Auger | | |
| **Weather:** | | **Auger Diameter:** | 6 in. O.D. | | |

| Depth (feet) | Graphical Log | FIELD EXPLORATION | Sample Number | Sample Type | Blow Counts(BC)= Uncorr. blows/6 in. | Pocket Pen(PP)= tsf Texas Cone(TC)= blows/6 in RQD=% | Recovery (NR=No Recovery) | LABORATORY RESULTS: USCS Symbol | Water Content (%) | Dry Density (pcf) | Passing No.4 Sieve (%) | Passing #200 Sieve (%) | Liquid Limit (NV=No Value) | Plasticity Index (NP=No Plasticity) | Other Tests/ Remarks |
|---|---|---|---|---|---|---|---|---|---|---|---|---|---|---|---|
| | | Latitude: 32.93350° N<br>Longitude: -96.84782° W<br>No Elevation Available<br>Location Offset: 10 ft. South<br><br>Surface Condition: Bare Earth | | | | | | | | | | | | | |
| | | **CLAY (CL)**: dark brown to orange, with limestone fragments, calcareous, possible fill, with sand seams | U-1 | | | PP=4.5+ | | | 17.7 | | | | | | |
| | | | U-2 | | | PP=4.5+ | | CL | 16.7 | | | 51 | 38 | 17 | |
| | | **Fat CLAY (CH)**: dark brown to dark brownish gray, hard, with fine gravel | U-3 | | | PP=4.0 | | | | | | | | | |
| 5 | | | U-4 | | | PP=4.0 | | | 23.0 | | | | | | |
| | | | U-5 | | | PP=4.0 | | | 25.6 | | | | | | |
| 10 | | | | | | | | | | | | | | | |
| 15 | | | | | | | | | | | | | | | |
| 20 | | | | | | | | | | | | | | | |
| 25 | | | | | | | | | | | | | | | |

The exploration was terminated at approximately 10 ft. below ground surface. The exploration was backfilled with auger cuttings on October 29, 2013.

GROUNDWATER LEVEL INFORMATION:
Groundwater was not encountered during drilling or after completion.
GENERAL NOTES:
Boring drilled at stake

KLEINFELDER
Bright People. Right Solutions.

| | |
|---|---|
| PROJECT NO.: | 137422 |
| DRAWN BY: | GW |
| CHECKED BY: | DR |
| DATE: | 11/8/2013 |
| REVISED: | |

BORING LOG P-04

Alpha Road Connector - Vitruvian Phase IV
Brookhaven Community College
Farmers Branch, Texas

BORING
P-04
PAGE: 1 of 1

gINT FILE: L:\gint\projects\dfw Project Logs\137422 Alphal Road Connector.gpj R:\KLF_STANDARD_GINT_LIBRARY_SR.1.2.GLB [KLF_BORING/TEST PIT SOIL LOG]

| | | | | | |
|---|---|---|---|---|---|
| **Date Begin - End:** | 10/19/2020 | **Drilling Company:** | StrataBore Inc. | **BORING LOG D-01** | |
| **Logged By:** | D. Marsau | **Drill Crew:** | Castillo | | |
| **Hor.-Vert. Datum:** | Not Available | **Drilling Equipment:** | CME-45 | **Hammer Type - Drop:** | 140 lb. Auto - 30 in. |
| **Plunge:** | -90 degrees | **Drilling Method:** | Continuous Flight Auger | | |
| **Weather:** | Overcast | **Exploration Diameter:** | 8" in. O.D. | | |

Latitude: 32.93208°
Longitude: -96.84678°
Surface Condition: Grass

| Depth (feet) | Graphical Log | Lithologic Description | Sample Type | Blow Counts(BC)= Uncorr. Blows/6 in. / Pocket Pen(PP)= tsf / Texas Cone(TC)= blows/6 in | Recovery (NR=No Recovery) | USCS Symbol | Water Content (%) | Dry Unit Wt. (pcf) | Passing #4 (%) | Passing #200 (%) | Liquid Limit | Plasticity Index (NP=NonPlastic) | Additional Tests/ Remarks |
|---|---|---|---|---|---|---|---|---|---|---|---|---|---|
| 0 | | **6" TOPSOIL** | | PP=4.5+ | 6" | | | | | | | | |
| | | **Fat CLAY (CH)**: dark brown and brown, moist, very stiff to hard, with calcareous nodules | | PP=3.5 | 9" | | | | | | | | |
| | | | | PP=3.0 | 9" | | | | | | | | |
| 5 | | | | PP=2.5 | 13" | | | | | | | | |
| | | | | PP=2.5 | 14" | CH | 29.4 | | 92 | 77 | 85 | 58 | |
| | | -light brown below 9 feet | | | | | | | | | | | |
| 10 | | | | | | | | | | | | | |
| | | -increase in sand, moist to wet below 13 feet | | BC=3<br>5<br>6 | 18" | | | | | | | | |
| 15 | | | | | | | | | | | | | |
| | | - shaly, dark gray below 18 feet | | PP=4.5+ | 8" | | | | | | | | |
| 20 | | | | | | | | | | | | | |
| 25 | | | | | | | | | | | | | |

The boring was terminated at approximately 20 ft. below ground surface. The boring was backfilled with auger cuttings on October 19, 2020.

GROUNDWATER LEVEL INFORMATION:
Groundwater was not observed during drilling or after completion.

GENERAL NOTES:
The boring was located in the field by a Kleinfelder professional using a handheld GPS device with a horizontal accuracy of approximately 15 feet.

KLEINFELDER
Bright People. Right Solutions.

| | |
|---|---|
| PROJECT NO.: | 20212439.001A |
| DRAWN BY: | DM |
| CHECKED BY: | RJH |
| DATE: | |

BORING LOG D-01

Alpha Road Connector - Vitruvian Phase IV
Brookhaven Community College
Farmers Branch, Texas

BORING
D-01



PLOTTED: 11/30/2020 08:42 PM BY: DMarsau
OFFICE FILTER: DALLAS
PROJECT NUMBER: 20212439.001A
gINT FILE: Klf_gint_master_2021
gINT TEMPLATE: E:\KLF_STANDARD_GINT_LIBRARY_2021.GLB [__KLF_BORING/TEST PIT SOIL LOG]

| | | | | | |
|---|---|---|---|---|---|
| **Date Begin - End:** | 10/19/2020 | **Drilling Company:** | StrataBore Inc. | **BORING LOG D-02** | |
| **Logged By:** | D. Marsau | **Drill Crew:** | Castillo | | |
| **Hor.-Vert. Datum:** | Not Available | **Drilling Equipment:** | CME-45 | **Hammer Type - Drop:** | 140 lb. Auto - 30 in. |
| **Plunge:** | -90 degrees | **Drilling Method:** | Continuous Flight Auger | | |
| **Weather:** | Overcast | **Exploration Diameter:** | 8" in. O.D. | | |

Latitude: 32.93090°
Longitude: -96.84520°
Surface Condition: Grass

| Depth (feet) | Graphical Log | Lithologic Description | Sample Type | Blow Counts(BC)= Uncorr. Blows/6 in. / Pocket Pen(PP)= tsf / Texas Cone(TC)= blows/6 in | Recovery (NR=No Recovery) | USCS Symbol | Water Content (%) | Dry Unit Wt. (pcf) | Passing #4 (%) | Passing #200 (%) | Liquid Limit | Plasticity Index (NP=NonPlastic) | Additional Tests/ Remarks |
|---|---|---|---|---|---|---|---|---|---|---|---|---|---|
| | | **6" TOPSOIL** | | PP=4.5+ | 7" | | | | | | | | |
| | | **Fat CLAY (CH)**: dark brown and gray, moist, hard, with calcareous nodules | | PP=4.5+ | 11" | CH | 27.3 | | 100 | 93 | 83 | 56 | |
| 5 | | | | PP=4.5+ | 4" | | | | | | | | |
| | | | | PP=NT | 3" | | | | | | | | |
| | | **Weathered LIMESTONE**: light yellowish brown, soft | | TC=50/5" 50/1" | | | | | | | | | |
| 10 | | | | TC=50/3" 50/1" | | | | | | | | | |
| | | **LIMESTONE**: light gray, hard | | | | | | | | | | | |
| 15 | | | | TC=50/1" 50/0.5" | | | | | | | | | |
| 20 | | | | | | | | | | | | | |

The boring was terminated at approximately 15 ft. below ground surface. The boring was backfilled with auger cuttings on October 19, 2020.

GROUNDWATER LEVEL INFORMATION:
Groundwater was not observed during drilling or after completion.

GENERAL NOTES:
The boring was located in the field by a Kleinfelder professional using a handheld GPS device with a horizontal accuracy of approximately 15 feet.

KLEINFELDER
Bright People. Right Solutions.

| | |
|---|---|
| PROJECT NO.: | 20212439.001A |
| DRAWN BY: | DM |
| CHECKED BY: | RJH |
| DATE: | |

BORING LOG D-02

Alpha Road Connector - Vitruvian Phase IV
Brookhaven Community College
Farmers Branch, Texas

BORING
D-02

PAGE: 1 of 1

PLOTTED: 11/30/2020 08:42 PM BY: DMarsau
OFFICE FILTER: DALLAS
PROJECT NUMBER: 20212439.001A
gINT FILE: Klf_gint_master_2021
gINT TEMPLATE: E:\KLF_STANDARD_GINT_LIBRARY_2021.GLB [_KLF_BORING/TEST PIT SOIL LOG]

| | | | | | |
|---|---|---|---|---|---|
| **Date Begin - End:** | 12/15/2020 | **Drilling Company:** | Kleinfelder | **BORING LOG D-03** | |
| **Logged By:** | D. Marsau | **Drill Crew:** | D. Marsau | | |
| **Hor.-Vert. Datum:** | Not Available | **Drilling Equipment:** | Hand Auger | | |
| **Plunge:** | -90 degrees | **Drilling Method:** | Hand Auger | | |
| **Weather:** | Overcast | **Exploration Diameter:** | 3" in. O.D. | | |

| FIELD EXPLORATION | | | | | | | LABORATORY RESULTS | | | | | | | |
|---|---|---|---|---|---|---|---|---|---|---|---|---|---|---|
| Depth (feet) | Graphical Log | Latitude: 32.93175° Longitude: -96.84498° Surface Condition: Grass<br>Lithologic Description | Sample Type | Blow Counts(BC)= Uncorr. Blows/6 in. | Pocket Pen(PP)= tsf<br>Texas Cone(TC)= blows/6 in | Recovery (NR=No Recovery) | USCS Symbol | Water Content (%) | Dry Unit Wt. (pcf) | Passing #4 (%) | Passing #200 (%) | Liquid Limit | Plasticity Index (NP=NonPlastic) | Additional Tests/ Remarks |
| | | **6" TOPSOIL** | | | | | | | | | | | | |
| | | **Fat CLAY (CH):** dark brown and brown, moist, stiff, with calcareous nodules | | | | | | | | | | | | |
| | | - light brown, with broken limestone pieces below 4 feet | | | | | CH | 25.0 | | 98 | 79 | 60 | 38 | |
| 5 | | **Weathered LIMESTONE:** light brown, soft | | | | | | | | | | | | |
| 10 | | | | | | | | | | | | | | |

The boring was terminated at approximately 6 ft. below ground surface. The boring was backfilled with auger cuttings on December 15, 2020.

GROUNDWATER LEVEL INFORMATION:
Groundwater was not observed during drilling or after completion.

GENERAL NOTES:
The boring was located in the field by a Kleinfelder professional using a handheld GPS device with a horizontal accuracy of approximately 15 feet.

KLEINFELDER
*Bright People. Right Solutions.*

| | | | |
|---|---|---|---|
| PROJECT NO.: 20212439.001A | BORING LOG D-03 | | BORING |
| DRAWN BY: DM | Alpha Road Connector - Vitruvian Phase IV<br>Brookhaven Community College<br>Farmers Branch, Texas | | D-03 |
| CHECKED BY: RJH | | | |
| DATE: | | | PAGE: 1 of 1 |

PLOTTED: 12/29/2020 10:11 AM BY: DMarsau
gINT FILE: Klf_gint_master_2021 gINT TEMPLATE: E:\KLF_STANDARD_GINT_LIBRARY_2021.GLB [_KLF_BORING/TEST PIT SOIL LOG] PROJECT NUMBER: 20212439.001A OFFICE FILTER: DALLAS

| | | | |
|---|---|---|---|
| **Date Begin - End:** | 12/15/2020 | **Drilling Company:** | Kleinfelder |
| **Logged By:** | D. Marsau | **Drill Crew:** | D. Marsau |
| **Hor.-Vert. Datum:** | Not Available | **Drilling Equipment:** | Hand Auger |
| **Plunge:** | -90 degrees | **Drilling Method:** | Hand Auger |
| **Weather:** | Overcast | **Exploration Diameter:** | 3" in. O.D. |

**BORING LOG D-04**

Latitude: 32.93152°
Longitude: -96.84580°
Surface Condition: Grass

| Depth (feet) | Graphical Log | Lithologic Description | Sample Type | Blow Counts(BC)= Uncorr. Blows/6 in. | Pocket Pen(PP)= tsf / Texas Cone(TC)= blows/6 in | Recovery (NR=No Recovery) | USCS Symbol | Water Content (%) | Dry Unit Wt. (pcf) | Passing #4 (%) | Passing #200 (%) | Liquid Limit | Plasticity Index (NP=NonPlastic) | Additional Tests/ Remarks |
|---|---|---|---|---|---|---|---|---|---|---|---|---|---|---|
| | | **6" TOPSOIL** | | | | | | | | | | | | |
| | | **Fat CLAY (CH):** dark brown and brown, moist, stiff, with calcareous nodules | | | | | CH | 44.6 | | 99 | 87 | 80 | 49 | |
| 5 | | | | | | | | | | | | | | |
| 10 | | | | | | | | | | | | | | |

The boring was terminated at approximately 7 ft. below ground surface. The boring was backfilled with auger cuttings on December 15, 2020.

GROUNDWATER LEVEL INFORMATION:
Groundwater was not observed during drilling or after completion.

GENERAL NOTES:
The boring was located in the field by a Kleinfelder professional using a handheld GPS device with a horizontal accuracy of approximately 15 feet.

KLEINFELDER
*Bright People. Right Solutions.*

| | |
|---|---|
| PROJECT NO.: | 20212439.001A |
| DRAWN BY: | DM |
| CHECKED BY: | RJH |
| DATE: | |

BORING LOG D-04

Alpha Road Connector - Vitruvian Phase IV
Brookhaven Community College
Farmers Branch, Texas

BORING
D-04



PLOTTED: 12/29/2020 10:11 AM BY: DMarsau
OFFICE FILTER: DALLAS
PROJECT NUMBER: 20212439.001A
gINT FILE: Klf_gint_master_2021
gINT TEMPLATE: E:\KLF_STANDARD_GINT_LIBRARY_2021.GLB [__KLF_BORING/TEST PIT SOIL LOG]

KLEINFELDER

*Bright People. Right Solutions.*

# Appendix B

GINT FILE: L:\gintprojects\dfw Project Logs\137422 Alpha Road Connector.gpj R:\KLF_STANDARD_GINT_LIBRARY_SR 1.2.GLB [SOIL LAB SUMMARY TABLE - BASIC]

| Exploration ID | Approx. Sample Depth (ft.) | Sample No. | Sample Description | Moisture Content (%) | Dry Density (pcf) | Sieve Analysis | | | Atterberg Limits | | | Swell/Compression | Other Tests |
|---|---|---|---|---|---|---|---|---|---|---|---|---|---|
| | | | | | | Passing 3/4 Inch Sieve (%) | Passing #4 Sieve (%) | Passing #200 Sieve (%) | LL | PL | PI | | |
| B-01 | 3.5 | U-3 | | 26.7 | 96 | | | | | | | | |
| B-01 | 6.5 | U-5 | LEAN CLAY WITH SAND (CL) | 29.2 | | | | 79 | 43 | 21 | 22 | | |
| B-01 | 8.0 | U-6 | | 39.4 | 83 | | | | | | | | |
| B-01 | 19.0 | U-10 | | 22.9 | 101 | | | | | | | | Unc. Comp. Str. = 1.68 tsf |
| B-01 | 30.0 | C-15 | | 14.6 | 120 | | | | | | | | Unc. Comp. Str. = 6.47 tsf |
| B-01 | 40.0 | C-19 | | 17.8 | 113 | | | | | | | | Unc. Comp. Str. = 6.75 tsf |
| B-02 | 3.5 | U-3 | | 14.9 | 116 | | | | | | | | |
| B-02 | 6.5 | U-5 | FAT CLAY (CH) | 18.6 | 109 | | | 95 | 66 | 27 | 39 | | |
| B-02 | 8.0 | U-6 | | 18.4 | | | | | | | | | Unc. Comp. Str. = 5.26 tsf |
| B-02 | 14.0 | | | 30.9 | | | | | | | | | |
| B-02 | 22.0 | | | 21.6 | 103 | | | | | | | | Unc. Comp. Str. = 3.38 tsf |
| B-02 | 35.0 | C-18 | | 11.2 | 128 | | | | | | | | Unc. Comp. Str. = 9.85 tsf |
| B-03 | 3.5 | U-3 | FAT CLAY WITH SAND (CH) | 18.9 | 107 | | | 81 | 58 | 26 | 32 | | |
| B-03 | 6.0 | | | 21.2 | 102 | | | | | | | | Unc. Comp. Str. = 7.06 tsf |
| B-03 | 6.5 | U-5 | | 22.0 | | | | | | | | | |
| B-03 | 8.0 | U-6 | | 25.0 | 98 | | | | | | | | |
| B-03 | 14.0 | U-8 | | 24.5 | | | | | | | | | |
| B-03 | 25.0 | C-13 | | 14.2 | 121 | | | | | | | | Unc. Comp. Str. = 13.5 tsf |
| B-03 | 35.0 | C-17 | | 18.5 | 113 | | | | | | | | Unc. Comp. Str. = 6.13 tsf |
| B-04 | 3.5 | U-3 | FAT CLAY (CH) | 16.8 | | | | 90 | 65 | 25 | 40 | | |
| B-04 | 6.5 | U-5 | | 19.1 | 107 | | | | | | | | |
| B-04 | 8.0 | U-6 | | 18.8 | | | | | | | | | Unc. Comp. Str. = 8.79 tsf |
| B-04 | 14.0 | U-8 | | 20.7 | 107 | | | | | | | | Unc. Comp. Str. = 5.15 tsf |
| B-04 | 35.0 | C-17 | | 17.8 | 112 | | | | | | | | Unc. Comp. Str. = 5.55 tsf |
| C-01 | 8.0 | U-5 | CLAYEY SAND (SC) | 24.2 | 107 | | | 36 | 43 | 22 | 21 | | Unc. Comp. Str. = 0.84 tsf |
| C-02 | 2.0 | U-2 | | 34.1 | | | | | | | | | |
| C-02 | 4.0 | S-3 | CLAYEY SAND (SC) | 12.6 | | | | 38 | 41 | 20 | 21 | | |
| P-01 | 2.0 | U-2 | FAT CLAY (CH) | 11.5 | | | | 95 | 71 | 27 | 44 | | |

KLEINFELDER
*Bright People. Right Solutions.*

| | |
|---|---|
| PROJECT NO.: | 137422 |
| DRAWN BY: | GW |
| CHECKED BY: | RH |
| DATE: | 11/8/2013 |
| REVISED: | |

LABORATORY TEST RESULT SUMMARY

Alpha Road Connector - Vitruvian Phase IV
Brookhaven Community College
Farmers Branch, Texas

BORING 15

gINT FILE: L:\gINTprojects\dfw Project Logs\137422 Alpha Road Connector.gpj R:\KLF_STANDARD_GINT_LIBRARY_SR.1.2.GLB [SOIL LAB SUMMARY TABLE - BASIC]

| Exploration ID | Approx. Sample Depth (ft.) | Sample No. | Sample Description | Moisture Content (%) | Dry Density (pcf) | Sieve Analysis | | | Atterberg Limits | | | Swell/Compression | Other Tests |
|---|---|---|---|---|---|---|---|---|---|---|---|---|---|
| | | | | | | Passing 3/4 Inch Sieve (%) | Passing #4 Sieve (%) | Passing #200 Sieve (%) | LL | PL | PI | | |
| P-02 | 0.0 | U-1 | | 30.5 | | | | | | | | | |
| P-02 | 2.0 | U-2 | SANDY FAT CLAY (CH) | 14.0 | | | | 67 | 57 | 23 | 34 | | |
| P-02 | 4.0 | U-3 | | 17.2 | | | | | | | | | |
| P-02 | 6.0 | U-4 | | 23.5 | | | | | | | | | |
| P-03 | 0.0 | U-1 | FAT CLAY (CH) | 31.5 | | | | 91 | 63 | 29 | 34 | | |
| P-03 | 2.0 | U-2 | | 22.2 | | | | | | | | | |
| P-03 | 4.0 | U-3 | | 24.8 | | | | | | | | | |
| P-03 | 6.0 | U-4 | | 23.1 | | | | | | | | | |
| P-04 | 0.0 | U-1 | | 17.7 | | | | | | | | | |
| P-04 | 2.0 | U-2 | SANDY LEAN CLAY (CL) | 16.7 | | | | 51 | 38 | 21 | 17 | | |
| P-04 | 6.0 | U-4 | | 23.0 | | | | | | | | | |
| P-04 | 8.0 | U-5 | | 25.6 | | | | | | | | | |

KLEINFELDER
*Bright People. Right Solutions.*

| | |
|---|---|
| PROJECT NO.: | 137422 |
| DRAWN BY: | GW |
| CHECKED BY: | RH |
| DATE: | 11/8/2013 |
| REVISED: | |

LABORATORY TEST RESULT SUMMARY

Alpha Road Connector - Vitruvian Phase IV
Brookhaven Community College
Farmers Branch, Texas

BORING 16

KLEINFELDER
Bright People. Right Solutions.

Geotechnical Engineering, Enviromental Services, and
Construction Materials Engineering and Testing

# Swell at Overburden Pressure Test Results

**Project Name:** Alpha Road Connector
**Location:** Farmers Branch, Texas
**Material Description:** Lean clay, yellow/brown & brown, with calcerous nodules

**Project No.:** 137422
**Boring No.:** B-1
**Sample Depth (ft.):** 3.5' - 5.0'

**Tested By:** E. Arapi
**Date Tested:** 10/8/2013
**Oedometer ID:** 1

## Soil Classification Properties

| | |
|---|---|
| Liquid Limit = | NA |
| Plastic Limit = | NA |
| Plasticity Index = | NA |
| % Passing #200 Sieve = | NA |

| | Initial | Final |
|---|---|---|
| Load Applied (psf) = | 500 | 500 |
| Moisture Content (%) = | 26.7 | 27.0 |
| Wet Unit Weight (pcf) = | 121.8 | 122.0 |
| Dry Unit Weight (pcf) = | 96.1 | 96.1 |

**One-Dimensional Swell at Overburden Pressure = 0.0%**

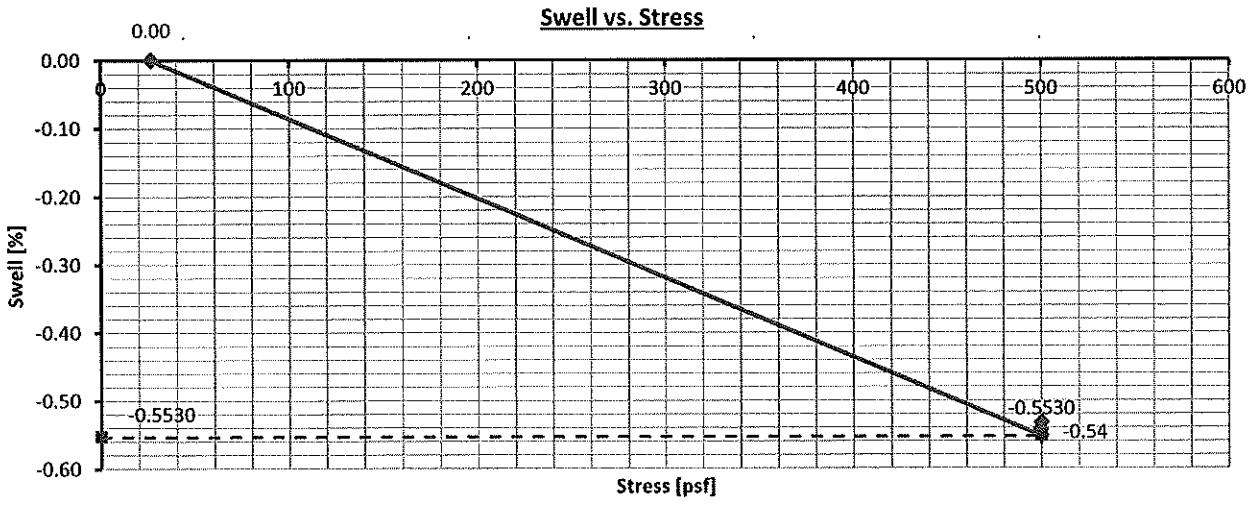

KLEINFELDER
Bright People. Right Solutions.

Geotechnical Engineering, Enviromental Services, and
Construction Materials Engineering and Testing

# Swell at Overburden Pressure Test Results

**Project Name:** Alpha Road Connector
**Location:**
**Material Description:** Lean clay, light brown, with fine gravel

**Project No.:** 137422
**Boring No.:** B-1
**Sample Depth (ft.):** 8.0' - 10.0'

**Tested By:** E. Arapi
**Date Tested:** 10/8/2013
**Oedometer ID:** 2

## Soil Classification Properties

| | |
|---|---|
| Liquid Limit = | NA |
| Plastic Limit = | NA |
| Plasticity Index = | NA |
| % Passing #200 Sieve = | NA |

| | Initial | Final |
|---|---|---|
| Load Applied (psf) = | 1000 | 1000 |
| Moisture Content (%) = | 39.4 | 38.5 |
| Wet Unit Weight (pcf) = | 115.2 | 114.7 |
| Dry Unit Weight (pcf) = | 82.7 | 82.8 |

**One-Dimensional Swell at Overburden Pressure = -0.1%**

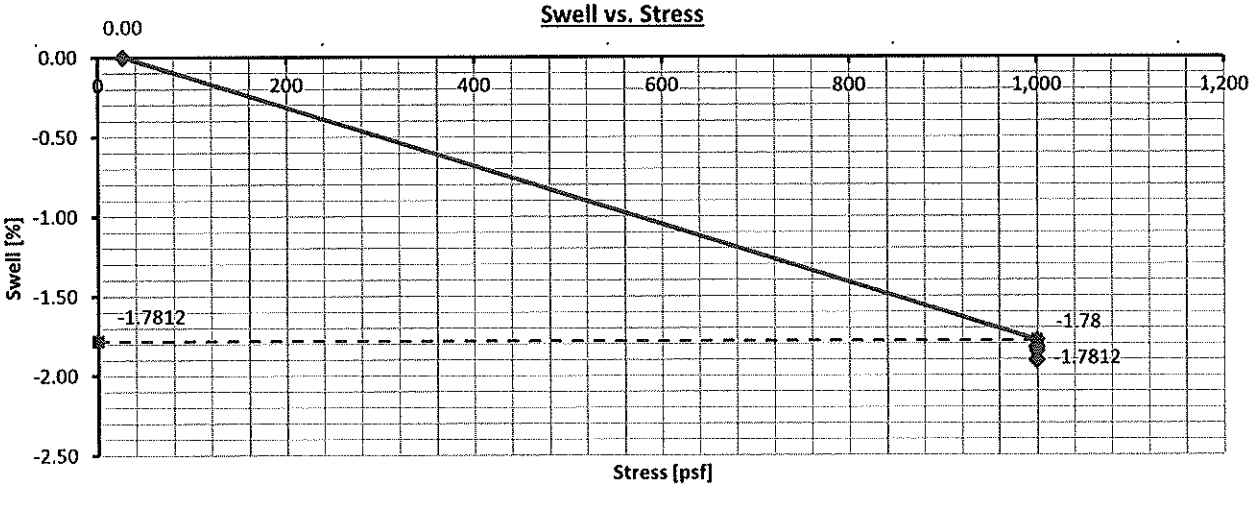

KLEINFELDER
Bright People. Right Solutions.

Geotechnical Engineering, Enviromental Services, and
Construction Materials Engineering and Testing

# Swell at Overburden Pressure Test Results

**Project Name:** Alpha Road Connector
**Location:** Farmers Branch, Texas
**Material Description:** Fat Clay, dark brown, with calcerous nodules

**Project No.:** 137422
**Boring No.:** B-2
**Sample Depth (ft.):** 3.5' - 5.0'

**Tested By:** E. Arapi
**Date Tested:** 10/8/2013
**Oedometer ID:** 3

## Soil Classification Properties

| | |
|---|---|
| Liquid Limit = | NA |
| Plastic Limit = | NA |
| Plasticity Index = | NA |
| % Passing #200 Sieve = | NA |

| | Initial | Final |
|---|---|---|
| Load Applied (psf) = | 500 | 32000 |
| Moisture Content (%) = | 14.9 | 17.6 |
| Wet Unit Weight (pcf) = | 133.0 | 126.4 |
| Dry Unit Weight (pcf) = | 115.8 | 107.5 |

**One-Dimensional Swell at Overburden Pressure = 7.7%**
**Swell Pressure = 31500 psf**

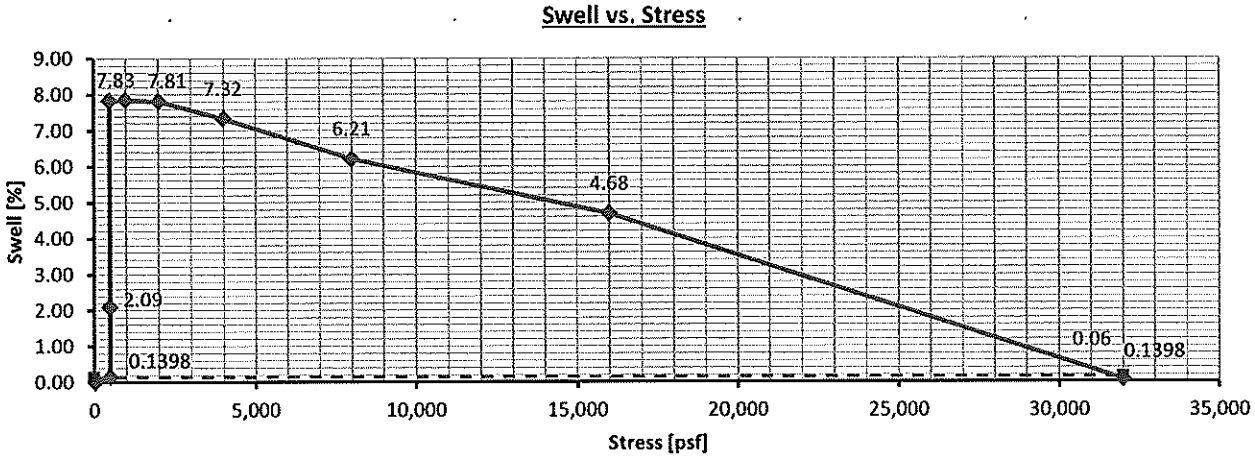

KLEINFELDER
Bright People. Right Solutions.

Geotechnical Engineering, Enviromental Services, and
Construction Materials Engineering and Testing

# Swell at Overburden Pressure Test Results

**Project Name:** Alpha Road Connector
**Location:** Farmers Branch, Texas
**Material Description:** Fat Clay, olive brown, with calcerous nodules

**Project No.:** 137422
**Boring No.:** B-2
**Sample Depth (ft.):** 6.5' - 8.0'

**Tested By:** E. Arapi
**Date Tested:** 10/8/2013
**Oedometer ID:** 4

## Soil Classification Properties

| | |
|---|---|
| Liquid Limit = | NA |
| Plastic Limit = | NA |
| Plasticity Index = | NA |
| % Passing #200 Sieve = | NA |

| | Initial | Final |
|---|---|---|
| Load Applied (psf) = | 875 | 28000 |
| Moisture Content (%) = | 19.7 | 21.0 |
| Wet Unit Weight (pcf) = | 129.5 | 122.0 |
| Dry Unit Weight (pcf) = | 108.2 | 100.8 |

**One-Dimensional Swell at Overburden Pressure = 7.3%**
**Swell Pressure = 24125 psf**

## Swell vs. Stress

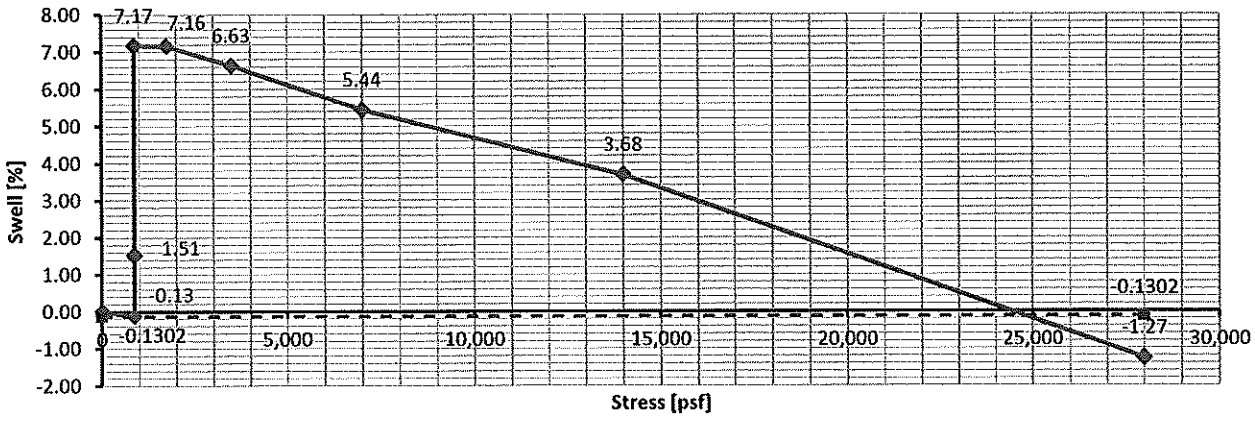

KLEINFELDER
Bright People. Right Solutions.

Geotechnical Engineering, Enviromental Services, and
Construction Materials Engineering and Testing

# Swell at Overburden Pressure Test Results

**Project Name:** Alpha Road Connector
**Location:** Farmers Branch, Texas
**Material Description:** Fat Clay, dark gray, with calcerous nodules & multi-colored shale partings

**Project No.:** 137422
**Boring No.:** B-3
**Sample Depth (ft.):** 3.5' - 5.0'

**Tested By:** E. Arapi
**Date Tested:** 10/8/2013
**Oedometer ID:** 5

## Soil Classification Properties

| | |
|---|---|
| Liquid Limit = | NA |
| Plastic Limit = | NA |
| Plasticity Index = | NA |
| % Passing #200 Sieve = | NA |

| | Initial | Final |
|---|---|---|
| Load Applied (psf) = | 500 | 32000 |
| Moisture Content (%) = | 19.6 | 20.9 |
| Wet Unit Weight (pcf) = | 127.7 | 120.9 |
| Dry Unit Weight (pcf) = | 106.8 | 100.0 |

**One-Dimensional Swell at Overburden Pressure = 6.9%**
**Swell Pressure = 24500 psf**

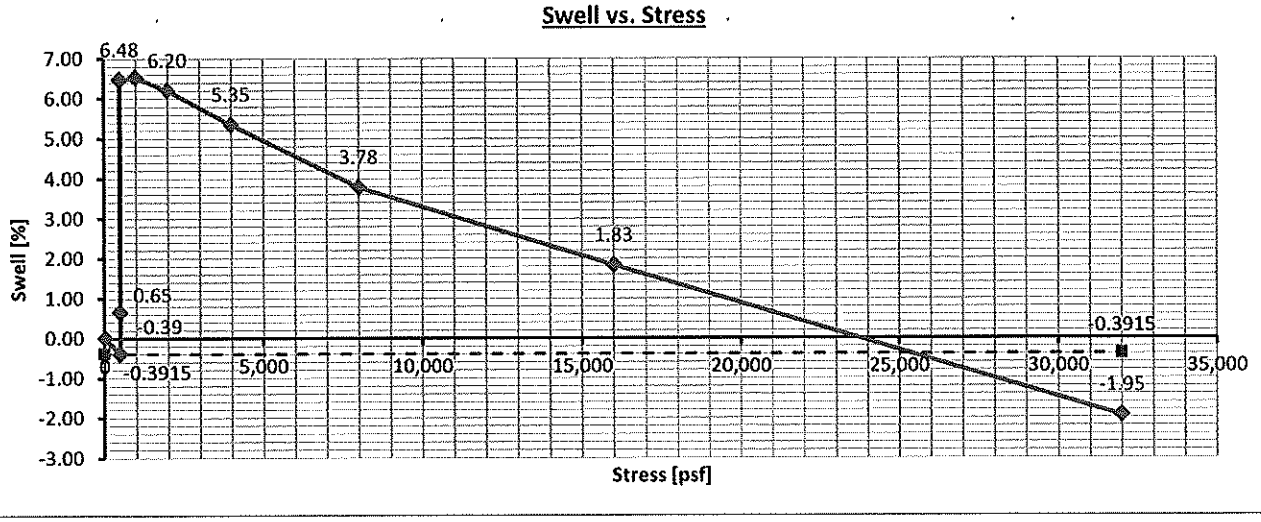

KLEINFELDER
Bright People. Right Solutions.

Geotechnical Engineering, Enviromental Services, and
Construction Materials Engineering and Testing

# Swell at Overburden Pressure Test Results

**Project Name:** Alpha Road Connector
**Location:** Farmers Branch, Texas
**Material Description:** Fat Clay, dark brown, with gray shale partings

**Project No.:** 137422
**Boring No.:** B-3
**Sample Depth (ft.):** 8.0' - 10.0'

**Tested By:** E. Arapi
**Date Tested:** 10/8/2013
**Oedometer ID:** 6

## Soil Classification Properties

| | |
|---|---|
| Liquid Limit = | NA |
| Plastic Limit = | NA |
| Plasticity Index = | NA |
| % Passing #200 Sieve = | NA |

| | Initial | Final |
|---|---|---|
| Load Applied (psf) = | 1000 | 1000 |
| Moisture Content (%) = | 25.0 | 26.6 |
| Wet Unit Weight (pcf) = | 123.1 | 124.0 |
| Dry Unit Weight (pcf) = | 98.5 | 98.0 |

**One-Dimensional Swell at Overburden Pressure = 0.5%**

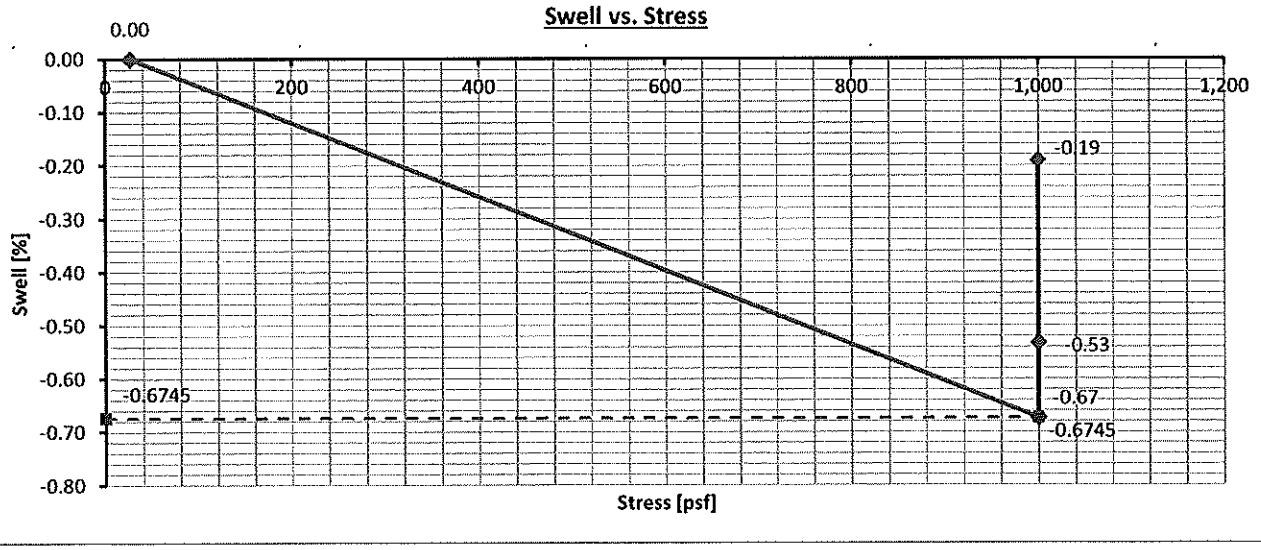

KLEINFELDER
Bright People. Right Solutions.

Geotechnical Engineering, Enviromental Services, and
Construction Materials Engineering and Testing

# Swell at Overburden Pressure Test Results

**Project Name:** Alpha Road Connector
**Location:** Farmers Branch, Texas
**Material Description:** Fat Clay, brown, with calcerous nodules

**Project No.:** 137422
**Boring No.:** B-4
**Sample Depth (ft.):** 6.5' - 8.0'

**Tested By:** E. Arapi
**Date Tested:** 10/8/2013
**Oedometer ID:** 7

## Soil Classification Properties

| | |
|---|---|
| Liquid Limit = | NA |
| Plastic Limit = | NA |
| Plasticity Index = | NA |
| % Passing #200 Sieve = | NA |

| | Initial | Final |
|---|---|---|
| Load Applied (psf) = | 875 | 16000 |
| Moisture Content (%) = | 19.1 | 21.0 |
| Wet Unit Weight (pcf) = | 127.4 | 123.6 |
| Dry Unit Weight (pcf) = | 107.0 | 102.1 |

**One-Dimensional Swell at Overburden Pressure = 4.7%**
**Swell Pressure = 13525 psf**

## Swell vs. Stress

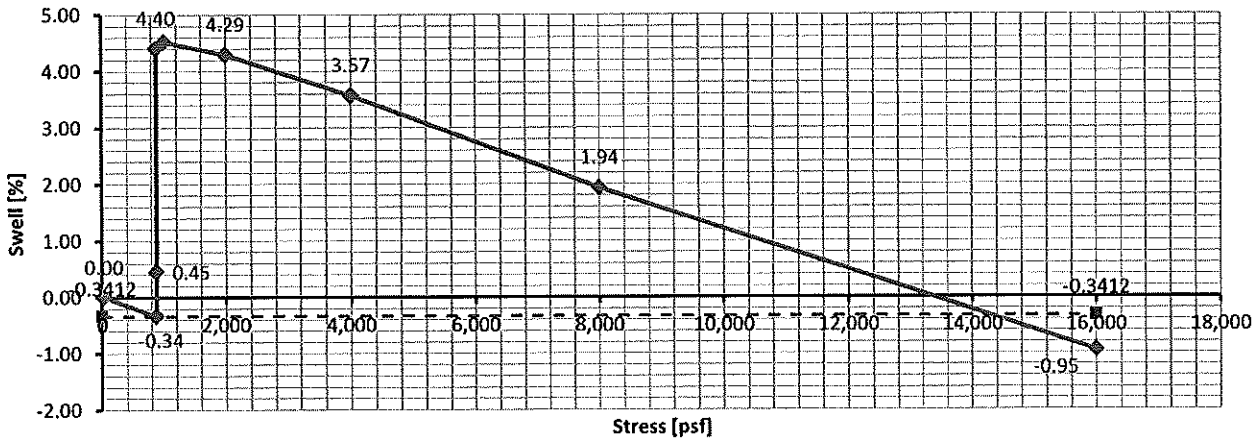

KLEINFELDER
Bright People. Right Solutions.

Geotechnical Engineering, Enviromental Services, and
Construction Materials Engineering and Testing

# Swell at Overburden Pressure Test Results

**Project Name:** Alpha Road Connector
**Location:** Farmers Branch, Texas
**Material Description:** Sandy clay, brown & light brown

**Project No.:** 137422
**Boring No.:** C-1
**Sample Depth (ft.):** 8.0' - 10.0'

**Tested By:** E. Arapi
**Date Tested:** 10/8/2013
**Oedometer ID:** 6

## Soil Classification Properties

| | |
|---|---|
| Liquid Limit = | NA |
| Plastic Limit = | NA |
| Plasticity Index = | NA |
| % Passing #200 Sieve = | NA |

| | Initial | Final |
|---|---|---|
| Load Applied (psf) = | 1000 | 1000 |
| Moisture Content (%) = | 26.5 | 26.0 |
| Wet Unit Weight (pcf) = | 123.0 | 122.7 |
| Dry Unit Weight (pcf) = | 97.2 | 97.4 |

**One-Dimensional Swell at Overburden Pressure = -0.2%**

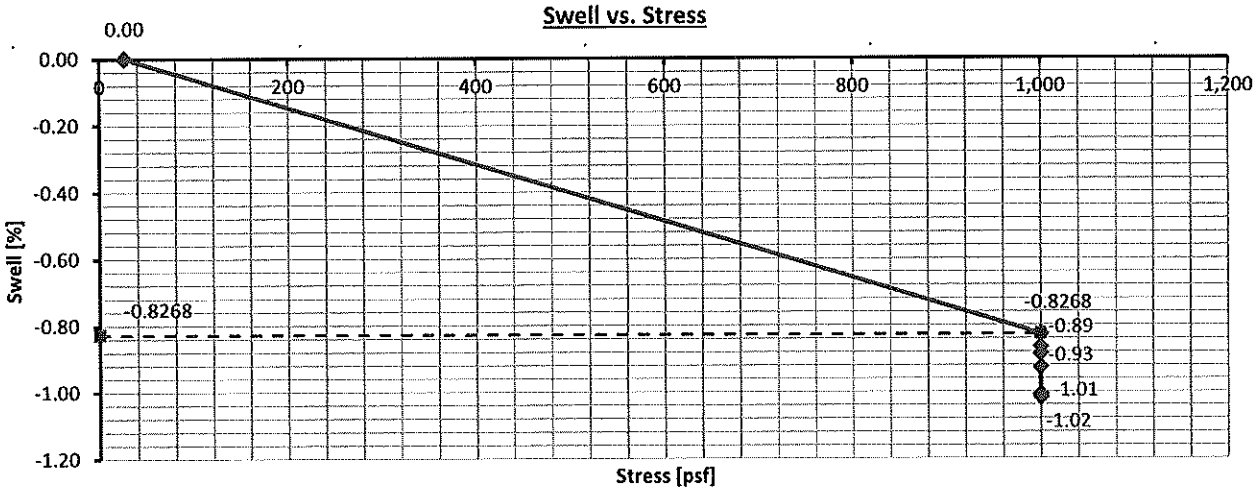

KLEINFELDER
Bright People. Right Solutions.

# pH Lime Series Test Results

**Project Name:** Alpha Road Connector
**Project Location:** Farmers Branch, Texas
**Material Description:** Fat Clay, dark brown

| | | | |
|---|---|---|---|
| **Project No.:** | 137422 | **Tested By:** | R. Brewer |
| **Boring No.:** | P-1 | **Date Tested:** | 11/13/13 |
| **Depth (ft.):** | 1.0' - 3.0' | **pH Meter ID:** | 54549 |

**Soil Classification Properties:**

| | |
|---|---|
| Liquid Limit = | 71 |
| Plastic Limit = | 27 |
| Plasticity Index = | 44 |
| % Passing #200 Sieve = | 95 |

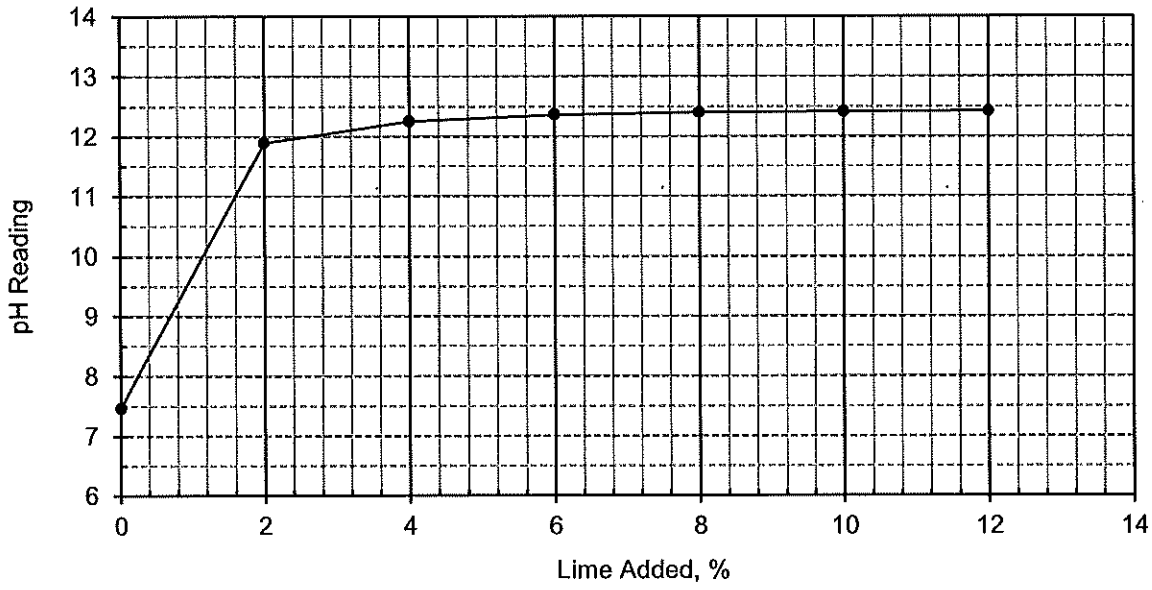


The results shown on this report are for the exclusive use of the client for whom they were obtained and apply only to the samples tested and/or inspected. They are not intended to be indicative of the qualities of apparently identical products. The use of our name must receive prior written approval. Reports must be reproduced in their entirety. Test method based on ASTM C 977 (Eades and Grim).

KLEINFELDER
Bright People. Right Solutions.

# pH Lime Series Test Results

**Project Name:** Alpha Road Connector
**Project Location:** Farmers Branch, Texas
**Material Description:** Fat Clay, light brown & dark brown

**Project No.:** 137422
**Boring No.:** C-1
**Depth (ft.):** 1.0' - 4.0'

**Tested By:** R. Brewer
**Date Tested:** 11/13/13
**pH Meter ID:** 54549

| % Lime Added | pH Reading |
|---|---|
| 0 | 7.53 |
| 2 | 12.03 |
| 4 | 12.28 |
| 6 | 12.36 |
| 8 | 12.40 |
| 10 | 12.41 |
| 12 | 12.43 |

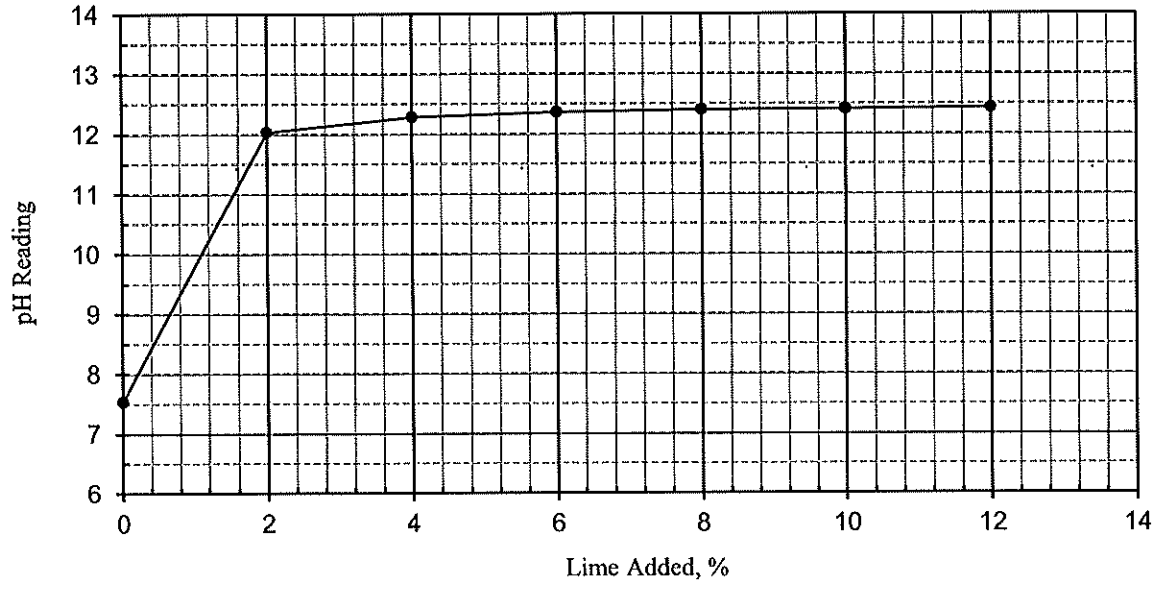


The results shown on this report are for the exclusive use of the client for whom they were obtained and apply only to the samples tested and/or inspected. They are not intended to be indicative of the qualities of apparently identical products. The use of our name must receive prior written approval. Reports must be reproduced in their entirety. Test method based on ASTM C 977 (Eades and Grim).