WING AVIATION APRON CONNECTOR AND CLAIRE CHENNAULT STREET DRIVEWAY RECONSTRUCTION

ADDISON AIRPORT

ADDISON, TEXAS

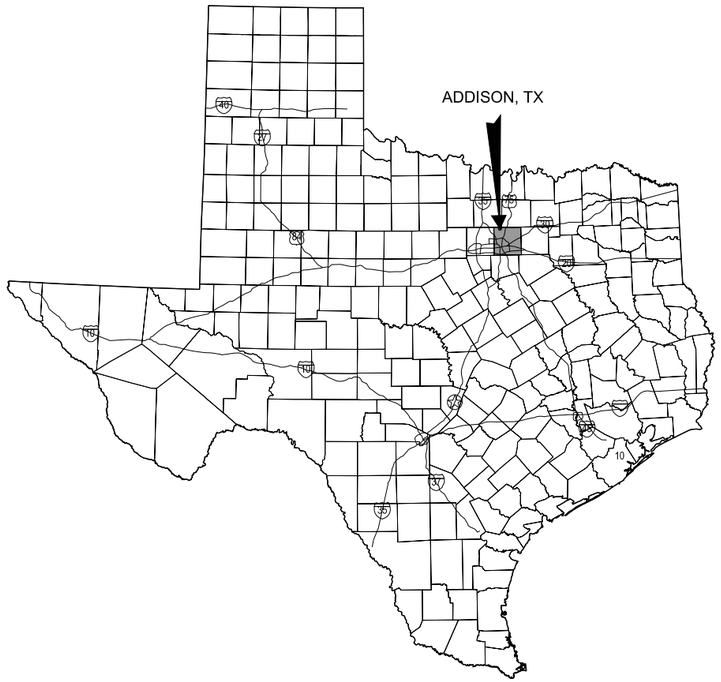

LOCATION MAP

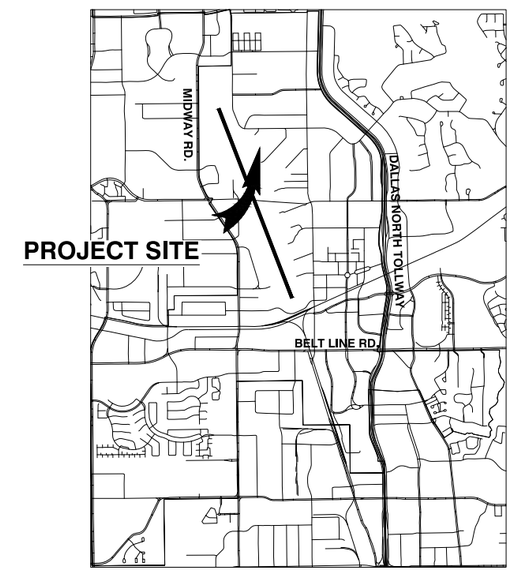

VICINITY MAP

NO SCALE

TOWN OF ADDISON BID NO. 18-22
GARVER PROJECT NO. 17081100
DECEMBER 2017

GARVER

3010 Gaylord Parkway
Suite 190
Frisco, TX 75034
(972) 377-7480

EARTHWORK QUANTITIES

WORK	*CUT (C.Y.)*	*FILL (C.Y.)*
DITCH GRADING	142	76
WING AVIATION APRON CONNECTOR CONSTRUCTION	176	200

GARVER

© 2017 GARVER, LLC
THIS DOCUMENT, ALONG WITH THE IDEAS AND DESIGNS CONVEYED HEREIN, SHALL BE CONSIDERED INSTRUMENTS OF PROFESSIONAL SERVICE AND ARE PROPERTY OF GARVER, LLC. ANY USE, REPRODUCTION, OR DISTRIBUTION OF THIS DOCUMENT, ALONG WITH THE IDEAS AND DESIGN CONTAINED HEREIN, IS PROHIBITED UNLESS AUTHORIZED IN WRITING BY GARVER, LLC OR EXPLICITLY ALLOWED IN THE GOVERNING PROFESSIONAL SERVICES AGREEMENT FOR THIS WORK.

REGISTRATION NO.
F-5713

STATE OF TEXAS
COLIN M. BIBLE
107159
LICENSED
PROFESSIONAL ENGINEER

DIGITALLY SIGNED
12/26/2017

REV.	DATE	DESCRIPTION	BY

ADDISON AIRPORT
ADDISON, TEXAS

WING AVIATION APRON CONNECTOR AND CLAIRE CHENNAULT STREET DRIVEWAY RECONSTRUCTION

COVER SHEET

JOB NO.: 17081100
DATE: NOV 2017
DESIGNED BY: JAH
DRAWN BY: JAH

BAR IS ONE INCH ON ORIGINAL DRAWING
0 1"
IF NOT ONE INCH ON THIS SHEET, ADJUST SCALES ACCORDINGLY.

DRAWING NUMBER
G-101

SHEET NUMBER **1**

File: L:\2017\17081100 - ads on-call\Drawings\work order no. 3\ADS-SBA-G101-CO.dwg Last Save: 12/26/2017 3:58 PM Last saved by: BCBeville
Last plotted by: Beville, Brandon C. Plot Style: AECmono.ctb Plot Scale: 1:1 Plot Date: 12/26/2017 3:59 PM Plotter used: DWG To PDF.pc3

Sheet Index

Sheet Number	Drawing Number	Sheet Title
GENERAL		
1	G-101	COVER SHEET
2	G-102	SHEET INDEX & GENERAL NOTES
3	G-201	GENERAL PROJECT LAYOUT
4	G-202	SAFETY & PHASING PLAN - WING AVIATION ENTRANCE (BASE BID 1)
5	G-203	SAFETY & PHASING PLAN - CLAIRE CHENNAULT STREET DRIVEWAY RECONSTRUCTION (BASE BID 2)
6	G-301	SURVEY CONTROL PLAN
7	G-401	EROSION CONTROL PLAN
8	G-402	EROSION CONTROL DETAILS I
9	G-403	EROSION CONTROL DETAILS II
10	G-404	EROSION CONTROL NOTES
WING AVIATION APRON		
11	C-100	WING AVIATION APRON CONNECTOR - DETAILS (BASE BID 1)
12	C-101	WING AVIATION DRAINAGE DETAILS
13	C-102	WING AVIATION APRON CONNECTOR - DEMOLITION PLAN (BASE BID 1)
14	C-103	WING AVIATION APRON CONNECTOR - LAYOUT PLAN (BASE BID 1)
15	C-104	WING AVIATION APRON CONNECTOR - JOINT LAYOUT PLAN (BASE BID 1)
16	C-105	WING AVIATION APRON CONNECTOR - DRAINAGE PLAN I (BASE BID 1)
17	C-106	WING AVIATION APRON CONNECTOR - DRAINAGE PLAN II (BASE BID 1)
CLAIRE CHENNAULT STREET		
18	C-200	CLAIRE CHENNAULT STREET DRIVEWAY - DETAILS (BASE BID 2)
19	C-201	CLAIRE CHENNAULT STREET DRIVEWAY DRAINAGE DETAILS
20	C-202	CLAIRE CHENNAULT STREET DRIVEWAY - DEMOLITION PLAN (BASE BID 2)
21	C-203	CLAIRE CHENNAULT STREET DRIVEWAY - LAYOUT PLAN (BASE BID 2)
22	C-204	CLAIRE CHENNAULT STREET DRIVEWAY - DRAINAGE PLAN (BASE BID 2)

GENERAL NOTES

1. THE CONTRACTOR SHALL NOTIFY ALL UTILITY COMPANIES 48 HOURS BEFORE WORK IS STARTED TO VERIFY UTILITY LOCATIONS (DIGTESS 1-800-344-8377).

2. THE CONTRACTOR SHALL NOTIFY ADDISON AIRPORT OPERATIONS 48 HOURS IN ADVANCE OF CONSTRUCTION ACTIVITY TO ALLOW SUFFICIENT TIME FOR COORDINATION OF NOTAMS AND TO LOCATE AND MARK EXISTING FIELD CABLES AND TO AVOID UNSCHEDULED FACILITY OUTAGES. THE CONTRACTOR SHALL PROVIDE 35 DAYS NOTICE TO FAA PRIOR TO BEGINNING CONSTRUCTION.

3. THE CONTRACTOR SHALL COMPLETE ALL WORK IN ACCORDANCE WITH THE FAA ADVISORY CIRCULAR 150/5370-2F, OR CURRENT VERSION, "OPERATIONAL SAFETY ON AIRPORTS DURING CONSTRUCTION".

4. THE CONTRACTOR'S STAGING AREA FOR OFFICE, STOCKPILE, EQUIPMENT, ENGINEER'S OFFICE, MATERIALS STORAGE AND EMPLOYEE PARKING SHALL BE NO CLOSER THAN 25 FEET FROM ANY FENCE LINE. ADDISON OPERATIONS SHALL APPROVE THE EXACT LOCATION OF THE STAGING AREA PRIOR TO ITS USE. THE SUGGESTED LOCATION IS SHOWN, OTHERS PROPOSED MAY BE ACCEPTABLE.

5. THE CONTRACTOR SHALL MAINTAIN ALL EXISTING ACCESS AND HAUL ROADS OUTSIDE THE LIMITS OF CONSTRUCTION DURING CONSTRUCTION AND SHALL RESTORE THE ROADS TO A CONDITION EQUAL TO OR BETTER THAN ITS ORIGINAL CONDITION AT NO ADDITIONAL COST TO THE OWNER. THE LOCATION OF ANY ADDITIONAL HAUL ROADS DESIRED BY THE CONTRACTOR IS SUBJECT TO THE APPROVAL OF THE AIRPORT AND ENGINEER.

6. THE CONTRACTOR IS RESPONSIBLE FOR CONSTRUCTING AND MAINTAINING TEMPORARY ACCESS AND/OR HAUL ROADS WHERE NECESSARY TO THE CONSTRUCTION LIMITS. THE CONTRACTOR SHALL COMPLETELY REMOVE THE TEMPORARY HAUL ROADS SHOWN ON THE PHASING PLANS UPON COMPLETION OF THE PROJECT AND SHALL RESTORE THE GROUND SURFACE AND TURF IN THE AREA TO ITS CONDITION PRIOR TO THIS CONSTRUCTION.

7. DURING MATERIAL DELIVERY / PAVING OPERATIONS, THE CONTRACTOR SHALL BE RESPONSIBLE FOR PROVIDING AND MAINTAINING TRAFFIC CONTROL. TRAFFIC CONTROL SHALL BE INCIDENTAL TO THE TOTAL PROJECT.

8. ALL EMPLOYEES OF THE CONTRACTOR SHALL ENTER AND EXIT THE WORK SITE AT THE DESIGNATED CONTRACTOR'S ACCESS GATE (AG). AN ADEQUATE SIGN SHALL BE PROVIDED DESIGNATING THIS GATE LOCATION AS THE "CONSTRUCTION EMPLOYEE ENTRANCE". MINIMUM REQUIREMENTS FOR AN ACCESS GATE ARE AS FOLLOWS:

A. ALL VEHICLES MUST STOP PRIOR TO ENTERING THE AIRPORT. IF A GATE GUARD IS USED, THEY MUST WAIT FOR THE GATE GUARD TO SIGNAL THEM TO PROCEED. ONLY AUTHORIZED CONTRACTORS, FAA PERSONNEL, AIRPORT PERSONNEL, PROJECT ENGINEERS, AND TENNANTS WILL BE ALLOWED ACCESS. THE CONTRACTOR WILL FURNISH TRAINING AND WRITTEN PROCEDURES TO THE GATE GUARD THAT MUST BE FOLLOWED DURING THE PROJECT.

B. DELIVERY VEHICLES FOR THE CONTRACTOR NEED TO CHECK IN AT THE GATE. THE CONTRACTOR MUST MAINTAIN POSITIVE ESCORT CONTROL OF ALL DELIVERY VEHICLES WHILE ON SITE.

C. THE GATE GUARD SHALL BE EQUIPPED WITH A TELEPHONE TO CONTACT AIRPORT OPERATIONS IF ANY UNAUTHORIZED VEHICLE ATTEMPTS TO ENTER THE AIRPORT AIR OPERATIONS AREA.

D. THE ACCESS GATE SHOWN ON THE PLANS SHALL REMAIN CLOSED AT ALL TIMES.

E. ANY AND ALL FINES THAT MAY BE LEVIED ON THE AIRPORT FOR A SECURITY AND/OR SAFETY VIOLATION IN CONNECTION WITH THE ACCESS GATE OR THE CONTRACTOR'S ACTIVITIES SHALL BE PAID BY THE CONTRACTOR. THE FAA MAY ASSESS A FINE DEPENDING ON THE SERIOUSNESS OF THE INFRACTION.

F. THE CONTRACTOR SHALL AT ALL TIMES ENSURE AGAINST UNAUTHORIZED ACCESS TO THE AIRFIELD.

G. PRIVATE AND COMPANY VEHICLES OPERATING WITHIN THE AIRCRAFT OPERATION AREA (AOA) MUST HAVE A COMPANY LOGO / IDENTIFICATION ON BOTH SIDES OF THE VEHICLE. THE CONTRACTOR'S EMPLOYEES' VEHICLES PARKED IN ANY OF THE CONTRACTOR'S STAGING AREA AND NOT USED FOR CONSTRUCTION PURPOSES DO NOT REQUIRE THIS IDENTIFICATION. SIGNS AS DESCRIBED ABOVE ARE REQUIRED ON PRIVATE VEHICLES OPERATED IN AREAS OTHER THAN THE STAGING AREA, DIRECT ACCESS ROUTES TO AND FROM THE STAGING AREA AND WITHIN THE CONSTRUCTION WORK LIMITS.

9. CONSTRUCTION WORK LIMITS ARE AS SHOWN ON THE PLANS. ANY AND ALL WORK CONDUCTED OUTSIDE THE CONSTRUCTION LIMITS, EXCEPT FOR MAINTENANCE ON BARRICADES SHALL BE ACCOMPLISHED WITH THE USE OF AN AIRPORT ESCORT. THE CONTRACTOR WILL PROVIDE AN ESCORT WITH A MINIMUM NOTICE OF TWO WORKING DAYS. NO WORK OR TRAVEL WILL BE PERMITTED OUTSIDE THE CONSTRUCTION LIMITS SHOWN WITHOUT PRIOR APPROVAL BY AIRPORT OPERATIONS AND AN AUTHORIZED ESCORT. AIRPORT OPERATIONS WILL NEED TO KEEP OPEN VARIOUS TAXIWAYS ADJACENT OR IN THE PROXIMITY OF OR CROSSING THE CONSTRUCTION AREA. THE WORK SHALL BE COORDINATED WITH AIRPORT OPERATIONS. NO WORK IS PERMITTED NOR ARE OPEN EXCAVATIONS, STORED MATERIALS, STOCKPILES OR EQUIPMENT ALLOWED OUTSIDE OF THE WORK AREA AS SHOWN IN THE PLANS WITHOUT PRIOR COORDINATION WITH AIRPORT OPERATIONS.

10. THE CONTRACTOR'S ACCESS TO THE AIRFIELD IS LIMITED TO THE LOCATIONS AS SHOWN ON THE PLANS. ACCESS FROM THE GATE TO THE STAGING, STORAGE AND WORK AREAS SHALL BE CONFINED TO THE ROUTES SHOWN AND WITHIN THE WORK AREA LIMITS. ACCESS VIA ANY OTHER ROUTES OR GATES WILL REQUIRE PRIOR WRITTEN APPROVAL BY AIRPORT OPERATIONS.

11. ANY TEMPORARY FACILITIES SHALL BE COMPLETELY REMOVED FROM THE SITE AT THE COMPLETION OF THE PROJECT AND THE SITE RESTORED TO ITS ORIGINAL CONDITION.

12. CONSTRUCTION LIMITS - ALL CONTRACTOR VEHICLES AND TRAFFIC (UNLESS OTHERWISE AUTHORIZED) SHALL REMAIN WITHIN THE DESIGNATED CONSTRUCTION LIMITS OR HAUL ROUTES. CONSTRUCTION, STORAGE AND STOCKPILING LIMITS MUST BE APPROVED BY THE AIRPORT OR ENGINEER.

13. FUEL, DIESEL FUEL, OR OTHER CONTAMINANTS SHALL NOT BE ALLOWED TO ENTER THE STORM SEWER SYSTEM. IF, IN THE EVENT SUCH CONTAMINANTS DO ENTER THE STORM SEWER SYSTEM OR GROUND WATER, THE CONTRACTOR SHALL IMMEDIATELY NOTIFY THE AIRPORT OF THE SPILL. THE CONTRACTOR WILL BE RESPONSIBLE FOR ALL COSTS INCURRED FOR CLEANUP OF CONTAMINATED AREAS ON AND OFF AIRPORT PROPERTY.

14. CAUTION SHALL BE TAKEN BY THE CONTRACTOR IN PREVENTING ANY DUST OR MUD WHICH MAY BECOME A HAZARD TO AIR AND GROUND OPERATIONS. THE CONTRACTOR SHALL CONTROL DUST AND MUD AT ALL TIMES AND MAY REQUIRE FULL TIME OPERATION WATER TRUCKS OR SWEEPERS. IF, IN THE OPINION OF THE AIRPORT OR THE ENGINEER, DUST OR MUD IS NOT BEING ADEQUATELY CONTROLLED THEY MAY SUSPEND WORK AND MAKE NECESSARY ARRANGEMENTS FOR DUST OR MUD CONTROL. THE COSTS THEREFORE SHALL BE DEDUCTED FROM THE PROGRESS PAYMENTS DUE THE CONTRACTOR.

15. CONTRACTOR SHALL TAKE THE NECESSARY STEPS TO OBTAIN DRIVER'S TRAINING FOR CONTRACTOR EMPLOYEES PRIOR TO ENTERING THE AIR OPERATIONS AREA.

16. MATERIAL / TOPSOIL STOCKPILES SHALL BE AT LOCATIONS APPROVED BY THE AIRPORT. MAXIMUM STOCKPILE HEIGHT IS 20 FEET.

17. THE CONTRACTOR WILL ISSUE AIRPORT APPROVED LAMINATED SAFETY CARDS SHOWING THE ACCESS GATE LOCATION, CONSTRUCTION AREA, ACCESS / HAUL ROUTE, CLOSED PAVEMENTS AND RUNWAY SAFETY AREAS AND/OR ANY OTHER PERTINENT INFORMATION. THESE CARDS WILL BE SUPPLIED BY THE CONTRACTOR. THESE SAFETY CARDS WILL BE SPECIFIC TO EACH INTERMEDIATE PHASE OF THE PROJECT. THE CONTRACTOR IS RESPONSIBLE FOR DISTRIBUTING AND COLLECTING THESE CARDS TO ALL OF THEIR EMPLOYEES, SUBCONTRACTORS AND SUPPLIER DELIVERY DRIVERS WHO WILL ENTER THE AOA. THE CONTRACTOR IS REQUIRED TO BRIEF ALL EMPLOYEES OR SUBCONTRACTORS ON AIRPORT SECURITY AND SAFETY PRIOR TO DISTRIBUTING THE SAFETY CARDS. BEFORE A NEW EMPLOYEE, SUBCONTRACTOR OR SUPPLIER BEGINS WORKING ON THE AIRPORT THE CONTRACTOR IS RESPONSIBLE TO MAKE SURE THEY ARE AWARE OF AIRPORT OPERATIONS, AS WELL AS GIVE THEM A TOUR OF THE PROJECT SITE, SHOWING THEM THE SPECIFIC WORK AREA, HAUL ROUTE AND THE MOVEMENT AREA THAT IS NOT TO ENTERED WITHOUT AIRPORT APPROVAL.

18. ALL EMPLOYEES OF THE CONTRACTOR OR SUBCONTRACTORS SHALL RECEIVE VEHICLE OPERATOR/PEDESTRIAN TRAINING FROM THE PROJECT SUPERINTENDENT. ALL EMPLOYEES SHALL RECEIVE NEW TRAINING WHEN MOVED TO DIFFERENT WORK AREAS OR PHASES OF THE PROJECT. A CONTRACTOR VEHICLE OPERATOR/PEDESTRIAN TRAINING CHECKLIST IS PROVIDED IN THE CONTRACT SPECIFICATIONS. THE CONTRACTOR'S PROJECT SUPERINTENDENT SHALL MAINTAIN THE COMPLETED CHECKLIST AND PROVIDE TO AIRPORT PERSONNEL FOR INSPECTION UPON THEIR REQUEST.

19. IF FOR ANY REASON, THE AIRPORT OR ENGINEER FEELS THAT SAFETY IS NOT BEING ADEQUATELY MAINTAINED, THEY MAY SUSPEND WORK UNTIL THE SAFETY ISSUE IS RESOLVED. THE COSTS THEREFORE SHALL BE DEDUCTED FROM THE PROGRESS PAYMENTS DUE THE CONTRACTOR.

20. IN THE EVENT THAT UNANTICIPATED ARCHEOLOGICAL DEPOSITS ARE ENCOUNTERED DURING CONSTRUCTION, WORK IN THE IMMEDIATE AREA WILL CEASE AND THE TXDOT ENGINEER WILL BE NOTIFIED.

21. IN THE EVENT THAT UNANTICIPATED HAZARDOUS MATERIALS ARE ENCOUNTERED DURING CONSTRUCTION, WORK IN THE IMMEDIATE AREA WILL CEASE AND THE TXDOT PROJECT MANAGER WILL BE NOTIFIED.

22. STOCKPILES AND STAGING AREAS WILL NOT BE PLACED WITHIN ANY WATER OF THE UNITED STATES, INCLUDING WETLANDS.

23. HAZARDOUS WASTE: ALL SPILLS MUST BE REPORTED IMMEDIATELY TO THE TXDOT ENGINEER.

GARVER

© 2017 GARVER, LLC
THIS DOCUMENT, ALONG WITH THE IDEAS AND DESIGNS CONVEYED HEREIN, SHALL BE CONSIDERED INSTRUMENTS OF PROFESSIONAL SERVICE AND ARE PROPERTY OF GARVER, LLC. ANY USE, REPRODUCTION, OR DISTRIBUTION OF THIS DOCUMENT, ALONG WITH THE IDEAS AND DESIGN CONTAINED HEREIN, IS PROHIBITED UNLESS AUTHORIZED IN WRITING BY GARVER, LLC OR EXPLICITLY ALLOWED IN THE GOVERNING PROFESSIONAL SERVICES AGREEMENT FOR THIS WORK.

REGISTRATION NO. F-5713

STATE OF TEXAS
COLIN M. BIBLE
107159
LICENSED PROFESSIONAL ENGINEER

DIGITALLY SIGNED
12/26/2017

REV.	DATE	DESCRIPTION	BY

ADDISON AIRPORT

ADDISON AIRPORT
ADDISON, TEXAS

WING AVIATION APRON CONNECTOR AND CLAIRE CHENNAULT STREET DRIVEWAY RECONSTRUCTION

SHEET INDEX & GENERAL NOTES

JOB NO.: 17081100
DATE: NOV 2017
DESIGNED BY: JAH
DRAWN BY: JAH

BAR IS ONE INCH ON ORIGINAL DRAWING
0 1"
IF NOT ONE INCH ON THIS SHEET, ADJUST SCALES ACCORDINGLY.

DRAWING NUMBER
G-102

SHEET NUMBER 2

File: I:\2017\17081100 - ads on-call\Drawings\work order no. 3\ADS-SBA-G102-IN.dwg Last Save: 11/16/2017 4:32 PM Last saved by: KKRutabana
Last plotted by: Beville, Brandon C. Plot Style: AECmono.ctb Plot Scale: 1:1 Plot Date: 12/26/2017 1:56 PM Plotter used: _AutoCAD PDF (General Documentation).pc3

LEGEND

- WING AVIATION APRON CONNECTOR CONSTRUCTION (BASE BID 1)
- CLAIRE CHENNAULT DRIVE RECONSTRUCTION (BASE BID 2)
- AG — ACCESS GATE
- CS — CONTRACTOR STAGING AREA
- EP — EMPLOYEE PARKING
- HAUL ROUTES

N

0 100' 200' 400' 600'
(IN FEET)

ITEMS OF WORK

BIDDING	DESCRIPTION
BASE BID 1 - WING AVIATION APRON CONNECTOR CONSTRUCTION	1. INSTALL BARRICADES. 2. REMOVE MARKINGS AS INDICATED ON PHASING SHEETS. 3. CONSTRUCTION OF WING AVIATION APRON ENTRANCE. 4. INSTALL PERMANENT PAVEMENT MARKINGS FOR WING AVIATION APRON ENTRANCE. 5. COMPLETE ALL GRADING ACCORDING TO LAYOUT PLANS.
BASE BID 2 - CLAIRE CHENNAULT STREET DRIVEWAY RECONSTRUCTION	1. INSTALL BARRICADES. 2. FULL DEPTH RECONSTRUCTION OF CLAIRE CHENNAULT DRIVE AS SHOWN WITHIN LAYOUT PLAN.

TOTAL CONTRACT TIME

	CALENDAR DAYS	WORK AVAILABILITY
WING AVIATION APRON ENTRANCE (BASE BID 1)		ANYTIME
CLAIRE CHENNAULT DRIVE (BASE BID 2)		ANYTIME

0 30 60 90

GARVER

© 2017 GARVER, LLC
THIS DOCUMENT, ALONG WITH THE IDEAS AND DESIGNS CONVEYED HEREIN, SHALL BE CONSIDERED INSTRUMENTS OF PROFESSIONAL SERVICE AND ARE PROPERTY OF GARVER, LLC. ANY USE, REPRODUCTION, OR DISTRIBUTION OF THIS DOCUMENT, ALONG WITH THE IDEAS AND DESIGN CONTAINED HEREIN, IS PROHIBITED UNLESS AUTHORIZED IN WRITING BY GARVER, LLC OR EXPLICITLY ALLOWED IN THE GOVERNING PROFESSIONAL SERVICES AGREEMENT FOR THIS WORK.

REGISTRATION NO. F-5713

STATE OF TEXAS
COLIN M. BIBLE
107159
LICENSED PROFESSIONAL ENGINEER

DIGITALLY SIGNED
12/26/2017

REV	DATE	DESCRIPTION	BY

ADDISON AIRPORT

ADDISON AIRPORT
ADDISON, TEXAS

WING AVIATION APRON CONNECTOR AND CLAIRE CHENNAULT STREET DRIVEWAY RECONSTRUCTION

GENERAL PROJECT LAYOUT

JOB NO.: 17081100
DATE: NOV 2017
DESIGNED BY: JAH
DRAWN BY: JAH

BAR IS ONE INCH ON ORIGINAL DRAWING
0 1"
IF NOT ONE INCH ON THIS SHEET, ADJUST SCALES ACCORDINGLY

DRAWING NUMBER
G-201

SHEET NUMBER **3**

File: I:\2017\17081100 - ads on-call\Drawings\work order no. 3\ADS-SBA-G201-PL.dwg Last Save: 11/17/2017 8:49 AM Last saved by: KKRutabana
Last plotted by: Beville, Brandon C. Plot Style: AECmono.ctb Plot Scale: 1:1 Plot Date: 12/26/2017 1:57 PM Plotter used: _AutoCAD PDF (General Documentation).pc3

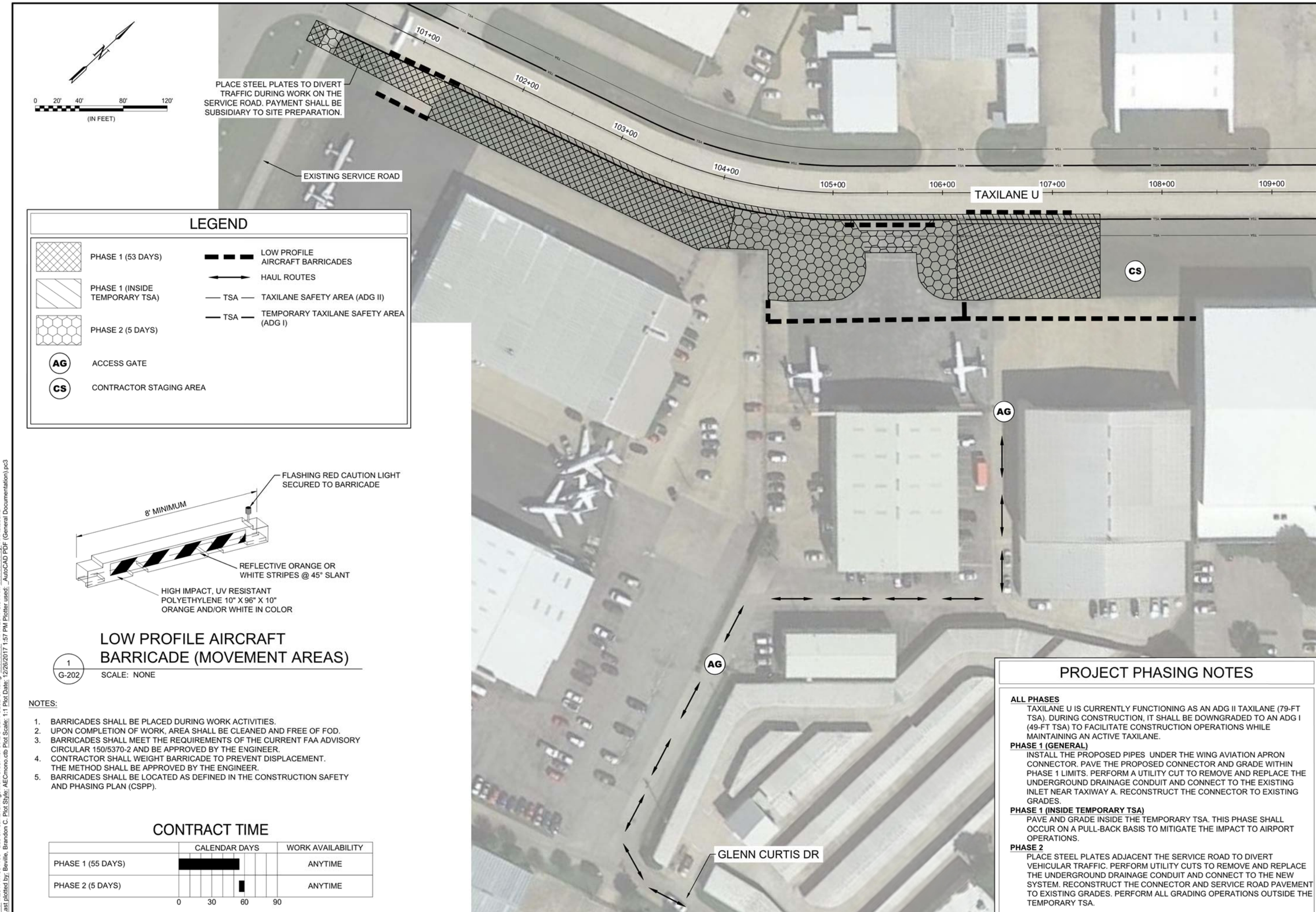

LEGEND

- PHASE 1 (53 DAYS)
- PHASE 1 (INSIDE TEMPORARY TSA)
- PHASE 2 (5 DAYS)
- AG — ACCESS GATE
- CS — CONTRACTOR STAGING AREA
- LOW PROFILE AIRCRAFT BARRICADES
- HAUL ROUTES
- TSA — TAXILANE SAFETY AREA (ADG II)
- TSA — TEMPORARY TAXILANE SAFETY AREA (ADG I)

LOW PROFILE AIRCRAFT BARRICADE (MOVEMENT AREAS)

1 / G-202 SCALE: NONE

NOTES:

1. BARRICADES SHALL BE PLACED DURING WORK ACTIVITIES.
2. UPON COMPLETION OF WORK, AREA SHALL BE CLEANED AND FREE OF FOD.
3. BARRICADES SHALL MEET THE REQUIREMENTS OF THE CURRENT FAA ADVISORY CIRCULAR 150/5370-2 AND BE APPROVED BY THE ENGINEER.
4. CONTRACTOR SHALL WEIGHT BARRICADE TO PREVENT DISPLACEMENT. THE METHOD SHALL BE APPROVED BY THE ENGINEER.
5. BARRICADES SHALL BE LOCATED AS DEFINED IN THE CONSTRUCTION SAFETY AND PHASING PLAN (CSPP).

CONTRACT TIME

	CALENDAR DAYS	WORK AVAILABILITY
PHASE 1 (55 DAYS)		ANYTIME
PHASE 2 (5 DAYS)		ANYTIME

0 30 60 90

PROJECT PHASING NOTES

ALL PHASES

TAXILANE U IS CURRENTLY FUNCTIONING AS AN ADG II TAXILANE (79-FT TSA). DURING CONSTRUCTION, IT SHALL BE DOWNGRADED TO AN ADG I (49-FT TSA) TO FACILITATE CONSTRUCTION OPERATIONS WHILE MAINTAINING AN ACTIVE TAXILANE.

PHASE 1 (GENERAL)

INSTALL THE PROPOSED PIPES UNDER THE WING AVIATION APRON CONNECTOR. PAVE THE PROPOSED CONNECTOR AND GRADE WITHIN PHASE 1 LIMITS. PERFORM A UTILITY CUT TO REMOVE AND REPLACE THE UNDERGROUND DRAINAGE CONDUIT AND CONNECT TO THE EXISTING INLET NEAR TAXIWAY A. RECONSTRUCT THE CONNECTOR TO EXISTING GRADES.

PHASE 1 (INSIDE TEMPORARY TSA)

PAVE AND GRADE INSIDE THE TEMPORARY TSA. THIS PHASE SHALL OCCUR ON A PULL-BACK BASIS TO MITIGATE THE IMPACT TO AIRPORT OPERATIONS.

PHASE 2

PLACE STEEL PLATES ADJACENT THE SERVICE ROAD TO DIVERT VEHICULAR TRAFFIC. PERFORM UTILITY CUTS TO REMOVE AND REPLACE THE UNDERGROUND DRAINAGE CONDUIT AND CONNECT TO THE NEW SYSTEM. RECONSTRUCT THE CONNECTOR AND SERVICE ROAD PAVEMENT TO EXISTING GRADES. PERFORM ALL GRADING OPERATIONS OUTSIDE THE TEMPORARY TSA.

GARVER

© 2017 GARVER, LLC
THIS DOCUMENT, ALONG WITH THE IDEAS AND DESIGNS CONVEYED HEREIN, SHALL BE CONSIDERED INSTRUMENTS OF PROFESSIONAL SERVICE AND ARE PROPERTY OF GARVER, LLC. ANY USE, REPRODUCTION, OR DISTRIBUTION OF THIS DOCUMENT, ALONG WITH THE IDEAS AND DESIGN CONTAINED HEREIN, IS PROHIBITED UNLESS AUTHORIZED IN WRITING BY GARVER, LLC OR EXPLICITLY ALLOWED IN THE GOVERNING PROFESSIONAL SERVICES AGREEMENT FOR THIS WORK.

REGISTRATION NO. F-5713

STATE OF TEXAS
COLIN M. BIBLE
107159
LICENSED PROFESSIONAL ENGINEER

DIGITALLY SIGNED 12/26/2017

REV.	DATE	DESCRIPTION	BY

ADDISON AIRPORT

ADDISON AIRPORT
ADDISON, TEXAS

WING AVIATION APRON CONNECTOR AND CLAIRE CHENNAULT STREET DRIVEWAY RECONSTRUCTION

SAFETY & PHASING PLAN - WING AVIATION ENTRANCE (BASE BID 1)

JOB NO.: 17081100
DATE: NOV 2017
DESIGNED BY: JAH
DRAWN BY: JAH

BAR IS ONE INCH ON ORIGINAL DRAWING
0 1"
IF NOT ONE INCH ON THIS SHEET, ADJUST SCALES ACCORDINGLY.

DRAWING NUMBER
G-202

SHEET NUMBER **4**

File: I:\2017\17081100 - ads on-call\Drawings\work order no. 3\ADS-SBA-G202-SP.dwg Last Save: 11/17/2017 8:51 AM Last saved by: KKRutabana
Last plotted by: Beville, Brandon C. Plot Style: AECmono.ctb Plot Scale: 1:1 Plot Date: 12/26/2017 1:57 PM Plotter used: _AutoCAD PDF (General Documentation).pc3

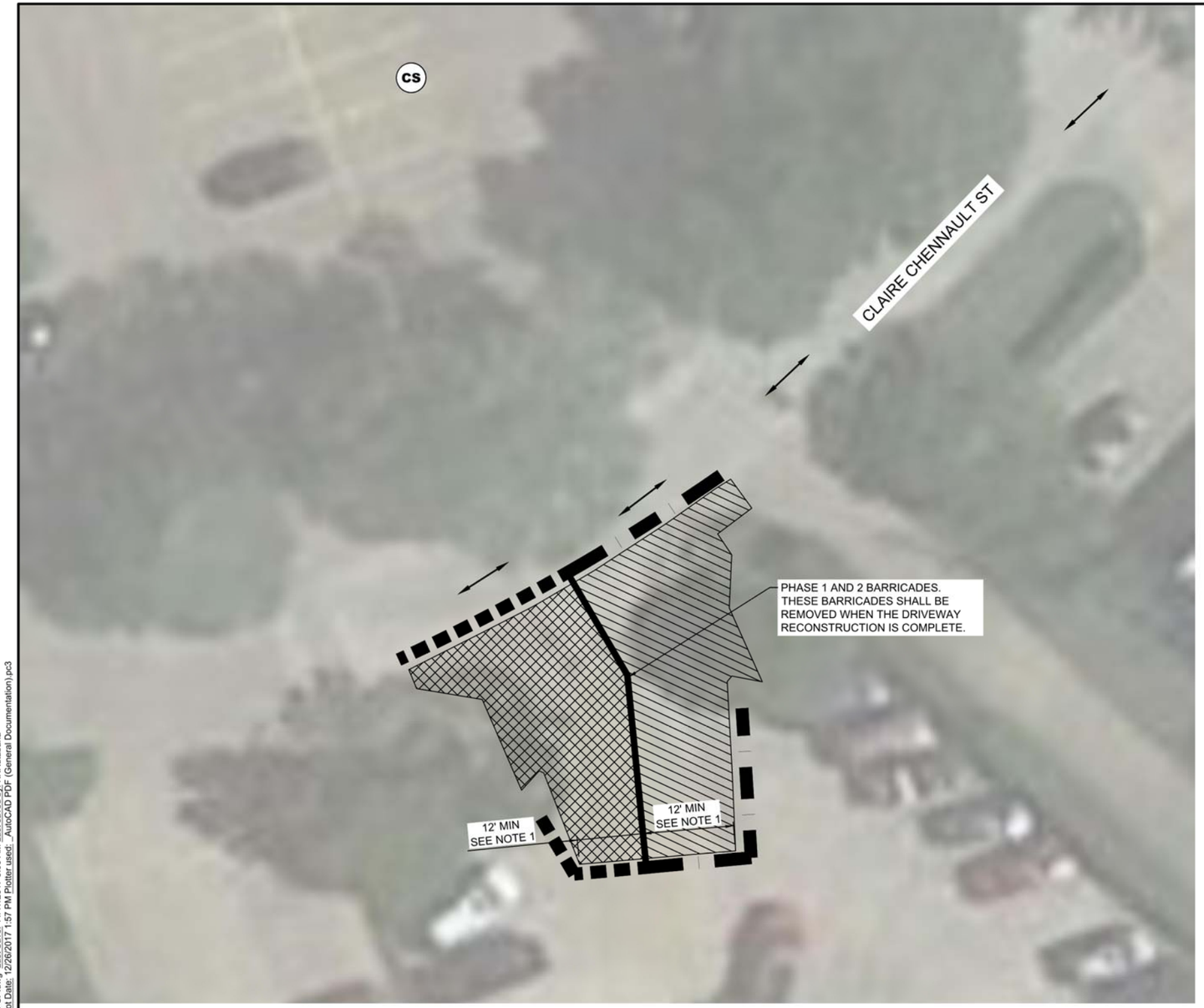

LEGEND

- PHASE 1 (30 DAYS)
- PHASE 2 (30 DAYS)
- BARRICADES (PHASE 1)
- BARRICADES (PHASE 2)
- HAUL ROUTES
- CS — CONTRACTOR STAGING AREA

N

0 20' 40' 80' 120'
(IN FEET)

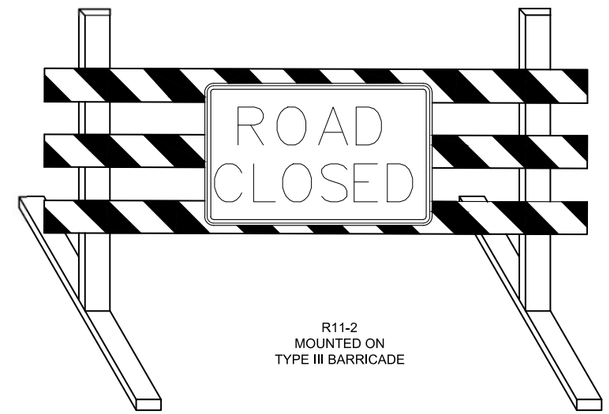

CONTRACT TIME

	CALENDAR DAYS	WORK AVAILABILITY
PHASE 1 (30 DAYS)		ANYTIME
PHASE 2 (30 DAYS)		ANYTIME

0 30 60 90

PROJECT PHASING NOTES

1. INSTALL BARRICADES SHOWN IN THE PLANS.
2. SWEEP EXISTING PAVEMENT AND PERFORM SURFACE PREPARATION.
3. CONSTRUCT FULL DEPTH RECONSTRUCTION OF DRIVE PAVEMENT.
4. DRAINAGE AND UNDERGROUND UTILITIES WORK SHALL BE PERFORMED WITHIN THEIR INDIVIDUAL PHASES

TRAFFIC CONTROL NOTES

1. THE CONTRACTOR SHALL ENSURE THAT A MINIMUM OF 12' OF USABLE PAVEMENT IS OPEN TO TRAFFIC ON THE DRIVEWAY AT ALL TIME.
2. THE CONTRACTOR IS RESPONSIBLE FOR PLACEMENT AND MAINTENANCE OF ALL NECESSARY BARRICADES AS REQUIRED BY THE TOWN OF ADDISON. CONTRACTOR SHALL PROVIDE, INSTALL, AND MAINTAIN TRAFFIC CONTROL DEVICES IN CONFORMANCE WITH THE 2011 TEXAS MANUAL OF UNIFORM TRAFFIC CONTROL DEVICES (TMUTCD), TEXAS DEPARTMENT OF TRANSPORTATION. SIGNING AND BARRICADING SHALL BE SUBJECT TO INSPECTION BY THE TOWN.
3. NO STOP OR YIELD SIGN IS TO BE RELOCATED OR REMOVED WITHOUT PRIOR APPROVAL BY THE TOWN. THE CONTRACTOR MUST CALL TOWN OF ADDISON TRANSPORTATION DIVISION AND OBTAIN PERMISSION FOR ANY CHANGES IN THESE SIGNS.
4. ACCESS TO ABUTTING PROPERTY DURING THE CONSTRUCTION OF THIS PROJECT MUST BE MAINTAINED FOR EMERGENCY AND LOCAL TRAFFIC AT ALL TIMES, EXCEPT AS OTHERWISE ALLOWED BY THESE PLANS OR BY THE TOWN ENGINEER. CONTRACTOR SHALL SEQUENCE CONSTRUCTION OPERATIONS SUCH THAT ACCESS TO RESIDENTIAL STREETS OUTSIDE THE PROJECT LIMITS ARE OPEN AT ALL TIMES.
5. ALL PERMANENT LANE MARKINGS ARE TO BE INSTALLED PER THE TOWN OF ADDISON STANDARD DETAILS AND PER THE TEXAS MANUAL OF UNIFORM TRAFFIC CONTROL DEVICES.
6. ALL EXISTING CONFLICTING SIGNS SHALL BE COVERED.

GARVER

© 2017 GARVER, LLC
THIS DOCUMENT, ALONG WITH THE IDEAS AND DESIGNS CONVEYED HEREIN, SHALL BE CONSIDERED INSTRUMENTS OF PROFESSIONAL SERVICE AND ARE PROPERTY OF GARVER, LLC. ANY USE, REPRODUCTION, OR DISTRIBUTION OF THIS DOCUMENT, ALONG WITH THE IDEAS AND DESIGN CONTAINED HEREIN, IS PROHIBITED UNLESS AUTHORIZED IN WRITING BY GARVER, LLC OR EXPLICITLY ALLOWED IN THE GOVERNING PROFESSIONAL SERVICES AGREEMENT FOR THIS WORK.

REGISTRATION NO. F-5713

STATE OF TEXAS
COLIN M. BIBLE
107159
LICENSED PROFESSIONAL ENGINEER

DIGITALLY SIGNED
12/26/2017

REV.	DATE	DESCRIPTION	BY

ADDISON AIRPORT

ADDISON AIRPORT
ADDISON, TEXAS

WING AVIATION APRON CONNECTOR AND CLAIRE CHENNAULT STREET DRIVEWAY RECONSTRUCTION

SAFETY & PHASING PLAN - CLAIRE CHENNAULT STREET DRIVEWAY RECONSTRUCTION (BASE BID 2)

JOB NO.: 17081100
DATE: NOV 2017
DESIGNED BY: JAH
DRAWN BY: JAH

BAR IS ONE INCH ON ORIGINAL DRAWING
0 1"
IF NOT ONE INCH ON THIS SHEET, ADJUST SCALES ACCORDINGLY.

DRAWING NUMBER
G-203

SHEET NUMBER **5**

File: I:\2017\17081100 - ads on-call\Drawings\work order no. 3\ADS-SBA-G203-SP.dwg Last Save: 11/17/2017 9:00 AM Last saved by: KKRulabana
Last plotted by: Beville, Brandon C. Plot Style: AECmono.ctb Plot Scale: 1:1 Plot Date: 12/26/2017 1:57 PM Plotter used: _AutoCAD PDF (General Documentation).pc3

N

0 40' 80' 160' 240'

(IN FEET)

LEGEND

X	SURVEY CONTROL POINTS

SURVEY CONTROL POINTS

POINT NO.	NORTHING	EASTING	ELEVATION	DESCRIPTION
A	7040415.68	2479070.97	639.33	BM/SET SQUARE CUT
B	7041202.84	2479082.54	637.87	IRSC/5/8IN PLASTIC YELLOW
C	7041196.28	2479233.52	638.38	IRSC/5/8IN PLASTIC YELLOW
D	7041215.45	2479331.60	639.68	IRSC/5/8IN PLASTIC YELLOW
E	7041248.78	2479436.39	640.44	IRSC/5/8IN PLASTIC YELLOW
F	7041397.75	2479489.47	639.15	IRSC/5/8IN PLASTIC YELLOW
G	7041509.86	2479595.06	639.83	IRSC/5/8IN PLASTIC YELLOW
H	7041584.78	2479727.09	640.45	IRSC/5/8IN PLASTIC YELLOW
I	7041721.00	2479788.31	641.36	IRSC/5/8IN PLASTIC YELLOW
J	7041789.10	2479917.95	641.80	IRSC/5/8IN PLASTIC YELLOW
K	7041894.98	2480022.25	642.66	IRSC/5/8IN PLASTIC YELLOW

GARVER

© 2017 GARVER, LLC
THIS DOCUMENT, ALONG WITH THE IDEAS AND DESIGNS CONVEYED HEREIN, SHALL BE CONSIDERED INSTRUMENTS OF PROFESSIONAL SERVICE AND ARE PROPERTY OF GARVER, LLC. ANY USE, REPRODUCTION, OR DISTRIBUTION OF THIS DOCUMENT, ALONG WITH THE IDEAS AND DESIGN CONTAINED HEREIN, IS PROHIBITED UNLESS AUTHORIZED IN WRITING BY GARVER, LLC OR EXPLICITLY ALLOWED IN THE GOVERNING PROFESSIONAL SERVICES AGREEMENT FOR THIS WORK.

REGISTRATION NO. F-5713

STATE OF TEXAS
COLIN M. BIBLE
107159
LICENSED
PROFESSIONAL ENGINEER

DIGITALLY SIGNED
12/26/2017

REV	DATE	DESCRIPTION	BY

ADDISON AIRPORT
ADDISON, TEXAS

WING AVIATION APRON CONNECTOR AND CLAIRE CHENNAULT STREET DRIVEWAY RECONSTRUCTION

SURVEY CONTROL PLAN

JOB NO.: 17081100
DATE: NOV 2017
DESIGNED BY: JAH
DRAWN BY: JAH

BAR IS ONE INCH ON ORIGINAL DRAWING
0 1"
IF NOT ONE INCH ON THIS SHEET, ADJUST SCALES ACCORDINGLY

DRAWING NUMBER
G-301

SHEET NUMBER 6

File: I:\2017\17081100 - ads on-call\Drawings\work order no. 3\ADS-SBA-G301-SC.dwg Last Save: 11/7/2017 3:47 PM Last saved by: KKRutabana
Last plotted by: Beville, Brandon C. Plot Style: AECmono.ctb Plot Scale: 1:1 Plot Date: 12/26/2017 1:58 PM Plotter used: _AutoCAD PDF (General Documentation).pc3

GARVER

© 2017 GARVER, LLC
THIS DOCUMENT, ALONG WITH THE IDEAS AND DESIGNS CONVEYED HEREIN, SHALL BE CONSIDERED INSTRUMENTS OF PROFESSIONAL SERVICE AND ARE PROPERTY OF GARVER, LLC. ANY USE, REPRODUCTION, OR DISTRIBUTION OF THIS DOCUMENT, ALONG WITH THE IDEAS AND DESIGN CONTAINED HEREIN, IS PROHIBITED UNLESS AUTHORIZED IN WRITING BY GARVER, LLC OR EXPLICITLY ALLOWED IN THE GOVERNING PROFESSIONAL SERVICES AGREEMENT FOR THIS WORK.

REGISTRATION NO. F-5713

STATE OF TEXAS
COLIN M. BIBLE
107159
LICENSED PROFESSIONAL ENGINEER

DIGITALLY SIGNED 12/26/2017

REV.	DATE	DESCRIPTION	BY

ADDISON AIRPORT

ADDISON AIRPORT
ADDISON, TEXAS

WING AVIATION APRON CONNECTOR AND CLAIRE CHENNAULT STREET DRIVEWAY RECONSTRUCTION

EROSION CONTROL PLAN

JOB NO.: 17081100
DATE: NOV 2017
DESIGNED BY: JAH
DRAWN BY: JAH

BAR IS ONE INCH ON ORIGINAL DRAWING
0 1"
IF NOT ONE INCH ON THIS SHEET, ADJUST SCALES ACCORDINGLY.

DRAWING NUMBER
G-401

SHEET NUMBER 7

File: I:\2017\17081100 - ads on-call\Drawings\work order no. 3\ADS-SBA-G401-SP.dwg Last Save: 11/17/2017 9:28 AM Last saved by: KKRutabana
Last plotted by: Beville, Brandon C. Plot Style: AECmono.ctb Plot Scale: 1:1 Plot Date: 12/26/2017 1:58 PM Plotter used: _AutoCAD PDF (General Documentation).pc3

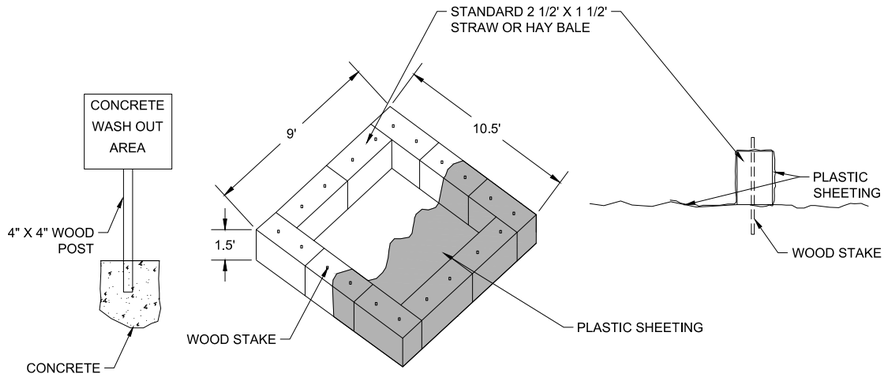

1 / G-402 CONCRETE WASH OUT AREA

SCALE: NONE

NOTES:

1. PLASTIC MUST BE 10 MIL THICK OR TWO 6 MIL PIECES OVERLAPPED.
2. ONCE CONCRETE DRIES, IT CAN BE ROLLED UP IN THE PLASTIC.
3. HAY BALES MUST BE STAKED WITH STAKED HOLDING PLASTIC LINER IN PLACE AND COVER ALL BALES. WOODEN STAKES MUST BE 3 FEET IN LENGTH.
4. IT IS THE RESPONSIBILITY OF THE CONTRACTOR TO ESTABLISH A WASH OUT AREA.
5. THE CONCRETE TRUCK DRIVER AND CONTRACTOR CAN BE CITED FOR WASH OUTS CONDUCTED IN A NON-DESIGNATED AREA.
6. AFTER THE DESIGNATED AREA FOR THE WASH OUT IS DETERMINED, SIGNAGE INDICATING CONCRETE WASH OUT AREA SHALL BE INSTALLED THAT IS VISIBLE TO EXITING VEHICLES. THE SIGN SHALL BE PLACED ON A WOOD POST AND ANCHORED IN CONCRETE.

EROSION CONTROL NOTES:

1. THE CONTRACTOR IS RESPONSIBLE FOR THE PROPER INSTALLATION OF THESE DEVICES AS SHOWN ON THIS SHEET, AND DESCRIBED IN THE SPECIFICATIONS. ADDITIONAL EROSION CONTROL AND/OR ADJUSTMENT OF LOCATIONS FOR EROSION CONTROL MAY BE REQUIRED.
2. SILT FENCES, DITCH CHEXX, INLET FILTERS AND INLET FILTER BARRIERS SHALL BE INSTALLED PER MANUFACTURER RECOMMENDATIONS AND ACCORDING TO THESE PLANS.
3. EACH CONTRACTOR SHALL BE RESPONSIBLE FOR MAINTAINING ALL EROSION CONTROL DEVICES ALREADY IN PLACE. CONTRACTOR SHALL REMOVE AND REPLACE EROSION CONTROL AS NEEDED FOR CONSTRUCTION OR ACCESS. ALL EROSION CONTROL MUST BE IN PLACE AT ALL TIMES DURING CONSTRUCTION.
4. IT SHALL BE THE CONTRACTOR'S RESPONSIBILITY TO USE WHATEVER MEANS NECESSARY TO CONTROL AND LIMIT SILT AND SEDIMENT LEAVING THE SITE. SPECIFICALLY, THE CONTRACTOR SHALL PROTECT ALL TAXIWAYS, TAXILANES, PARKING AREAS, STREAMS, CREEKS, STORM DRAIN SYSTEMS AND INLETS FROM EROSION DEPOSITS.

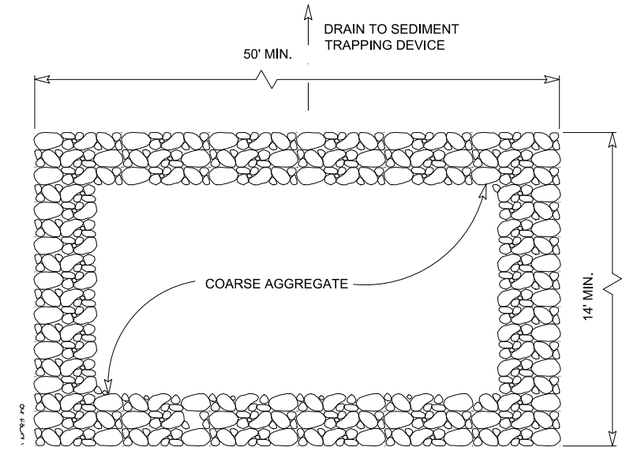

2A / G-402 PLAN

SCALE: NONE

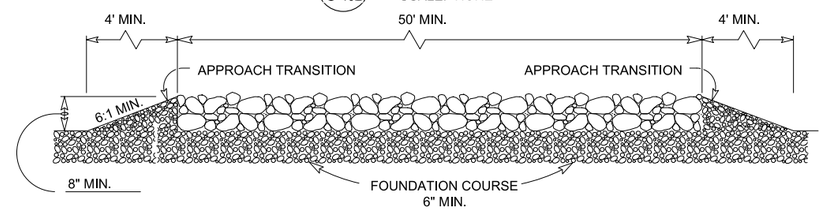

2B / G-402 PROFILE

SCALE: NONE

2 / G-402 CONSTRUCTION EXIT (TYPE 1)

SCALE: NONE

GENERAL NOTES:

1. THE LENGTH OF THE TYPE 1 CONSTRUCTION EXIT SHALL BE AS INDICATED ON THE PLANS, BUT NOT LESS THAN 50'.
2. THE COARSE AGGREGATE SHOULD BE OPEN GRADED WITH A SIZE OF 4" TO 8".
3. THE APPROACH TRANSITIONS SHOULD BE NO STEEPER THAN 6:1 AND CONSTRUCTED AS DIRECTED BY THE ENGINEER.
4. THE CONSTRUCTION EXIT FOUNDATION COURSE SHALL BE FLEXIBLE BASE, BITUMINOUS CONCRETE, PORTLAND CEMENT CONCRETE OR OTHER MATERIAL AS APPROVED BY THE ENGINEER.
5. THE CONSTRUCTION EXIT SHALL BE GRADED TO ALLOW DRAINAGE TO A SEDIMENT TRAPPING DEVICE.
6. THE GUIDELINES SHOWN HEREON ARE SUGGESTIONS AND MAY BE MODIFIED BY THE ENGINEER.

GARVER

© 2017 GARVER, LLC
THIS DOCUMENT, ALONG WITH THE IDEAS AND DESIGNS CONVEYED HEREIN, SHALL BE CONSIDERED INSTRUMENTS OF PROFESSIONAL SERVICE AND ARE PROPERTY OF GARVER, LLC. ANY USE, REPRODUCTION, OR DISTRIBUTION OF THIS DOCUMENT, ALONG WITH THE IDEAS AND DESIGN CONTAINED HEREIN, IS PROHIBITED UNLESS AUTHORIZED IN WRITING BY GARVER, LLC OR EXPLICITLY ALLOWED IN THE GOVERNING PROFESSIONAL SERVICES AGREEMENT FOR THIS WORK.

REGISTRATION NO. F-5713

STATE OF TEXAS
COLIN M. BIBLE
107159
LICENSED PROFESSIONAL ENGINEER

DIGITALLY SIGNED
12/26/2017

REV.	DATE	DESCRIPTION	BY

ADDISON AIRPORT
ADDISON, TEXAS

WING AVIATION APRON CONNECTOR AND CLAIRE CHENNAULT STREET DRIVEWAY RECONSTRUCTION

EROSION CONTROL DETAILS I

JOB NO.: 17081100
DATE: NOV 2017
DESIGNED BY: JAH
DRAWN BY: JAH

BAR IS ONE INCH ON ORIGINAL DRAWING
0 1"
IF NOT ONE INCH ON THIS SHEET, ADJUST SCALES ACCORDINGLY.

DRAWING NUMBER
G-402

SHEET NUMBER 8

File: I:\2017\17081100 - ads on-call\Drawings\work order no. 3\ADS-SBA-G401-SP.dwg Last Save: 11/17/2017 9:28 AM Last saved by: KKRutabana
Last plotted by: Beville, Brandon C. Plot Style: AECmono.ctb Plot Scale: 1:1 Plot Date: 12/26/2017 1:58 PM Plotter used: _AutoCAD PDF (General Documentation).pc3

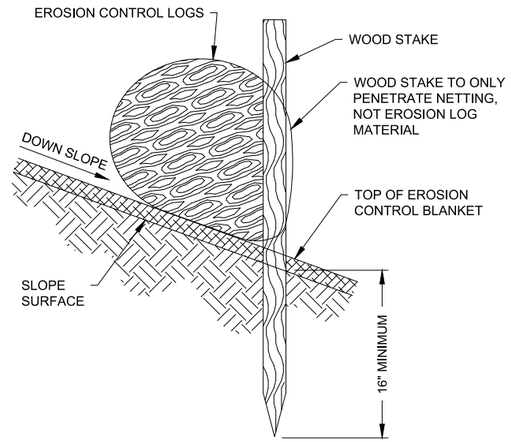

G-403 1A **INSTALLATION WITH BLANKET**
SCALE: NONE

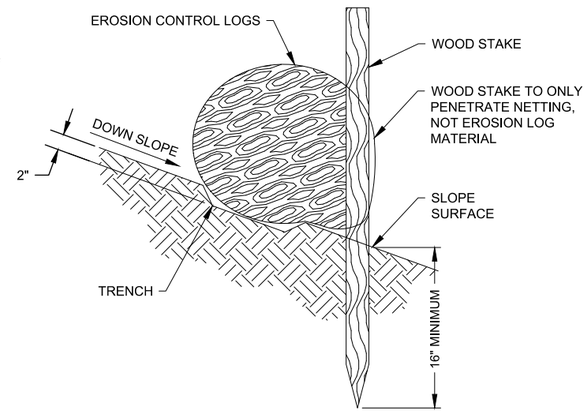

G-403 1B **INSTALLATION WITH TRENCH**
SCALE: NONE

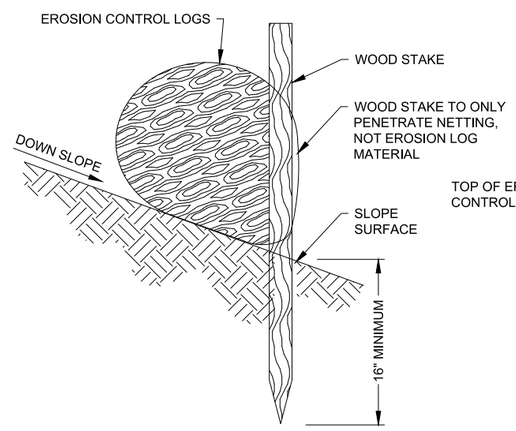

G-403 1C **INSTALLATION ON BARE SOIL**
SCALE: NONE

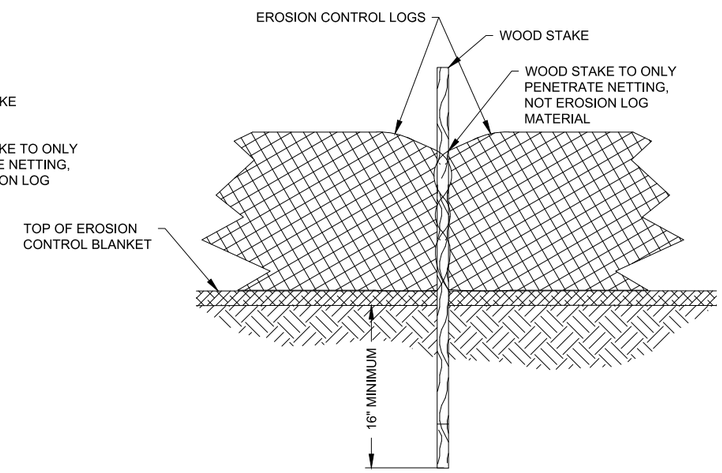

G-403 1D **INSTALLATION DETAILS (FRONT VIEW)**
SCALE: NONE

G-403 1 **TEMPORARY EROSION CONTROL LOG**
SCALE: NONE

NOTE:

TRENCH OPTION IS MOST APPLICABLE IN LOOSE, UNCONSOLIDATED SOILS.

1-1/8" X 1-1/8" X 30" WOODEN STAKES ARE RECOMMENDED FOR 6", 9", AND 12" SEDIMENT LOGS.

1-1/8" X 1-1/8" X 48" WOODEN STAKES ARE RECOMMENDED FOR 20" SEDIMENT LOGS.

GARVER

© 2017 GARVER, LLC
THIS DOCUMENT, ALONG WITH THE IDEAS AND DESIGNS CONVEYED HEREIN, SHALL BE CONSIDERED INSTRUMENTS OF PROFESSIONAL SERVICE AND ARE PROPERTY OF GARVER, LLC. ANY USE, REPRODUCTION, OR DISTRIBUTION OF THIS DOCUMENT, ALONG WITH THE IDEAS AND DESIGN CONTAINED HEREIN, IS PROHIBITED UNLESS AUTHORIZED IN WRITING BY GARVER, LLC OR EXPLICITLY ALLOWED IN THE GOVERNING PROFESSIONAL SERVICES AGREEMENT FOR THIS WORK.

REGISTRATION NO. F-5713

STATE OF TEXAS
COLIN M. BIBLE
107159
LICENSED PROFESSIONAL ENGINEER

DIGITALLY SIGNED
12/26/2017

REV.	DATE	DESCRIPTION	BY

ADDISON AIRPORT
ADDISON, TEXAS

WING AVIATION APRON CONNECTOR AND CLAIRE CHENNAULT STREET DRIVEWAY RECONSTRUCTION

EROSION CONTROL DETAILS II

JOB NO.: 17081100
DATE: NOV 2017
DESIGNED BY: JAH
DRAWN BY: JAH

BAR IS ONE INCH ON ORIGINAL DRAWING
0 1"
IF NOT ONE INCH ON THIS SHEET, ADJUST SCALES ACCORDINGLY.

DRAWING NUMBER
G-403

SHEET NUMBER **9**

File: I:\2017\17081100 - ads on-call\Drawings\work order no. 3\ADS-SBA-G401-SP.dwg Last Save: 11/17/2017 9:28 AM Last saved by: KKRutabana
Last plotted by: Beville, Brandon C. Plot Style: AECmono.ctb Plot Scale: 1:1 Plot Date: 12/26/2017 1:58 PM Plotter used: _AutoCAD PDF (General Documentation).pc3

Site Description

PROJECT LIMITS: Addison Airport, Addison, TX

PROJECT DESCRIPTION: Improvements of the Northwest drainage ditch condition.

MAJOR SOIL DISTURBING ACTIVITIES: Installation of slope protection around existing drainage ditch as well as construction of a new drainage ditch section.

TOTAL PROJECT AREA: 1.91 ACRES

TOTAL AREA TO BE DISTURBED: 1.91 ACRES

WEIGHTED RUNOFF COEFFICIENT
(AFTER CONSTRUCTION): 0.9

EXISTING CONDIDTION OF SOIL & VEGETATIVE COVER AND % OF EXISTING VEGETATIVE COVER: The existing cover is clayey with Bermuda grass and is in fair condition. Existing vegetative cover is at 85%

NAME OF RECEIVING WATERS: The Addison airport is in the Hutton Branch watershed and the receiving water is Elm Fork Trinity River.

SOIL STABILIZATION PRACTICES:

- ____ TEMPORARY SEEDING
- X PERMANENT PLANTING, SODDING, OR SEEDING
- ____ MULCHING
- ____ SOIL RETENTION BLANKET
- ____ BUFFER ZONES
- ____ PRESERVATION OF NATURAL RESOURCES

OTHER:

STRUCTURAL PRACTICES:

- ____ SILT FENCES
- ____ HAY BALES
- X ROCK BERMS
- ____ DIVERSION, INTERCEPTOR, OR PERIMETER DIKES
- ____ DIVERSION, INTERCEPTOR, OR PERIMETER SWALES
- ____ DIVERSION DIKE AND SWALE COMBINATIONS
- ____ PIPE SLOPE DRAINS
- ____ PAVED FLUMES
- X ROCK BEDDING AT CONSTRUCTION EXIT
- ____ TIMBER MATTING AT CONSTRUCTION EXIT
- ____ CHANNEL LINERS
- ____ SEDIMENT TRAPS
- ____ SEDIMENT BASINS
- ____ STORM INLET SEDIMENT TRAP
- ____ STONE OUTLET STRUCTURES
- ____ CURBS AND GUTTERS
- ____ STORM SEWERS
- ____ VELOCITY CONTROL DEVICES

OTHER: CONCRETE WASHOUT

NARRATIVE – SEQUENCE OF CONTRUSTION (STORM WATER MANAGEMENT) ACTIVITIES:
Erosion and sediment controls shall be installed at the beginning of the project. Once installed, these devices will be maintained during the duration of the project. Erosion and sediment controls will be removed at the project's completion.

STORM WATER MANAGEMENT: Existing storm sewers and drainage ditches will be used to remove water from the site. Storm water from the site will flow through rock filter dams to filter sediment from storm water runoff before it leaves the site.

OTHER EROSION AND SEDIMENT CONTROLS

MAINTENANCE:
ALL EROSION AND SEDIMENT CONTROLS WILL BE MAINTAINED IN GOOD WORKING ORDER. IF A REPAIR IS NECESSARY, IT WILL BE DONE AT THE EARLIEST DATE POSSIBLE, BUT NO LATER THAN 7 CALENDAR DAYS AFTER THE SURROUNDING EXPOSED GROUND HAS DRIED SUFFICIENTLY TO PREVENT DAMAGE FROM HEAVY EQUIPMENT. THE AREAS ADJACENT TO CREEEKS AND DRAINAGE WAYS SHALL HAVE PRIORITY FOLLOWED BY DEVICES USED FOR SILT REDUCTION IN THE DISTURBED AREAS.

INSPECTION:
AN INSPECTION WILL BE PERFORMED BY A RESIDENT PROJECT REPRESENTATIVE EVERY 7 DAYS AN INSPECTION REPORT WILL BE MADE PER EACH INSPECTION. BASED ON THE INSPECTION RESULTS, THE CONTROLS SHALL BE REVISED PER THE INSPECTION REPORT.

WASTE MATERIALS:
ALL WASTE MATERIALS WILL BE COLLECTED AND STORED IN A SECURELY LIDDED METAL DUMPSTER. THE DUMPSTER WILL MEET ALL STATE AND LOCAL SOLID WASTE MANAGEMENT REGULATIONS. ALL TRASH AND CONSTRUCTION DEBRIS FROM THE SITE WILL BE DEPOSITED IN THE DUMPSTER. THE DUMPSTER WILL BE EMPTIED AS NECESSARY OR AS REQUIRED BY LOCAL REGULATION AT AN APPROVED LANDFILL. NO CONSTRUCTION WASTE MATERIAL WILL BE BURIED ON SITE.

HAZARDOUS WASTE (INCLUDING SPILL REPORTING):
AT A MINIMUM, ANY PRODUCTS IN THE FOLLOWING CATEGORIES ARE CONSIDERED TO BE HAZARDOUS: PAINTS ACIDS FOR CLEANING MASONRY SURFACES, CLEANING SOLVENTS, ASPHALT PRODUCTS, CHEMICAL ADDITIVES FOR SOIL STABILIZATION, AND CONCRETE CURING COMPOUNDS AND ADDITIVES. IN THE EVENT OF A SPILL WHICH MAY BE HAZARDOUS, THE SPILL COORDINATOR SHOULD BE CONTACTED IMMEDIATELY.

SANITARY WASTE:
ALL SANITARY WASTE WILL BE COLLECTED FROM THE PORTABLE UNITS BY A LICENSED SANITARY WASTE MANAGEMENT CONTRACTOR AS NECESSARY OR AS REQUIRED BY LOCAL REGULATION.

OFFSITE VEHICLE TRACKING:

- X HAUL ROADS DAMPENED FOR DUST CONTROL
- X LOADED HAUL TRUCKS TO BE COVERED WITH TARPAULIN
- X EXCESS DIRT ON ROAD REMOVED DAILY
- X STABILIZED CONSTRUCTION ENTRANCE

OTHER:
REMARKS:
DISPOSAL AREAS, STOCKPILES, AND HAUL ROADS SHALL BE CONSTRUCTED IN A MANNER THAT WILL MINIMIZE AND CONTROL THE AMOUNT OF SEDIMENT THAT MAY ENTER RECEIVING WATERS. DISPOSAL AREAS SHALL NOT BE LOCATED IN ANY WETLANDS, WATERBODY OR STREAMBED. CONSTRUCTION STAGING AREAS AND VEHICLE MAINTENANCE AREAS SHALL BE CONSTRUCTED BY THE CONTRACTOR IN A MANNER TO MINIMIZE THE RUNOFF OF POLLUTANTS. ALL WATERWAYS SHALL BE CLEARED AS SOON AS PRACTICAL OF TEMPORARY EMBANKMENT, TEMPORARY BRIDGES, MATTING, FALSE WORK, PILING, DEBRIS OR OTHER OBSTRUCTIONS PACED DURING CONSTRUCTION OPERATION THAT ARE NOT A PART OF THE FINISHED WORK.

GARVER

© 2017 GARVER, LLC
THIS DOCUMENT, ALONG WITH THE IDEAS AND DESIGNS CONVEYED HEREIN, SHALL BE CONSIDERED INSTRUMENTS OF PROFESSIONAL SERVICE AND ARE PROPERTY OF GARVER, LLC. ANY USE, REPRODUCTION, OR DISTRIBUTION OF THIS DOCUMENT, ALONG WITH THE IDEAS AND DESIGN CONTAINED HEREIN, IS PROHIBITED UNLESS AUTHORIZED IN WRITING BY GARVER, LLC OR EXPLICITLY ALLOWED IN THE GOVERNING PROFESSIONAL SERVICES AGREEMENT FOR THIS WORK.

REGISTRATION NO. F-5713

STATE OF TEXAS
COLIN M. BIBLE
107159
LICENSED PROFESSIONAL ENGINEER

DIGITALLY SIGNED 12/26/2017

REV	DATE	DESCRIPTION	BY

ADDISON AIRPORT
ADDISON, TEXAS

WING AVIATION APRON CONNECTOR AND CLAIRE CHENNAULT STREET DRIVEWAY RECONSTRUCTION

EROSION CONTROL NOTES

JOB NO.: 17081100
DATE: NOV 2017
DESIGNED BY: JAH
DRAWN BY: JAH

BAR IS ONE INCH ON ORIGINAL DRAWING
0 1"
IF NOT ONE INCH ON THIS SHEET, ADJUST SCALES ACCORDINGLY.

DRAWING NUMBER
G-404

SHEET NUMBER 10

File: I:\2017\17081100 - ads on-call\Drawings\work order no. 3\ADS-SBA-G401-SP.dwg Last Save: 11/17/2017 9:28 AM Last saved by: KKRutabana
Last plotted by: Beville, Brandon C. Plot Style: AECmono.ctb Plot Scale: 1:1 Plot Date: 12/26/2017 1:58 PM Plotter used: _AutoCAD PDF (General Documentation).pc3

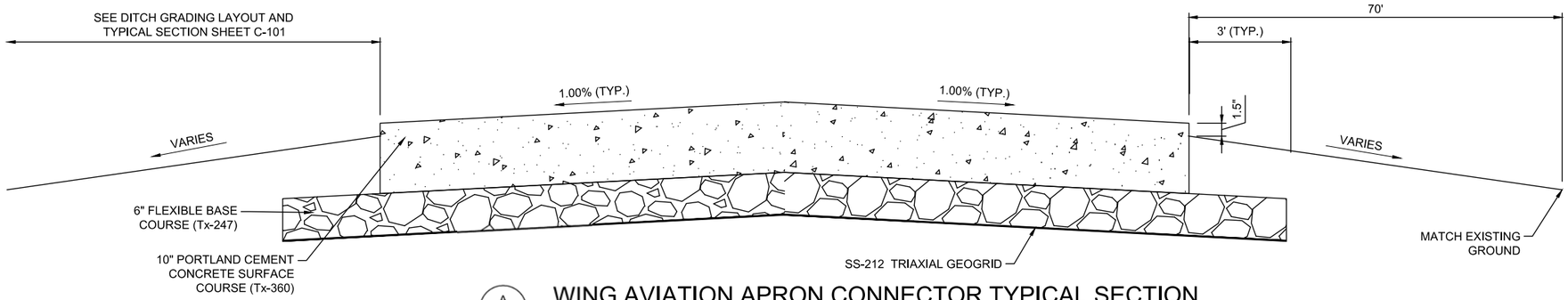

A / C-100 WING AVIATION APRON CONNECTOR TYPICAL SECTION

SCALE: NONE

*SEE PAVING LAYOUT SHEET

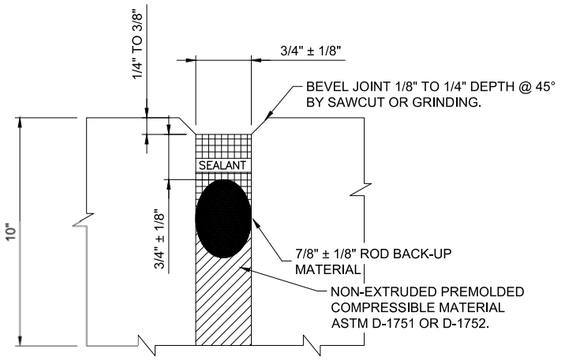

1 / C-100 DETAIL 1-ISOLATION JOINTS

SCALE: NONE

UTILITY CUTS SHALL BE REPAIRED USING THE SAME PAVEMENT SECTION AS THE WING AVIATION APRON CONNNECTOR.

B / C-100 UTILITY CUT REPAIR

SCALE: NONE

SYMBOLS

- SEALANT
- ROD BACK-UP MATERIAL CLOSED-CELL RESILIENT FOAM OR SPONGE RUBBER
- RESILIENT FILLER

DOWEL BAR LEGEND
10" SLAB THICKNESS
DIAMETER = 3/4" LENGTH = 18" SPACING = 12" O.C.

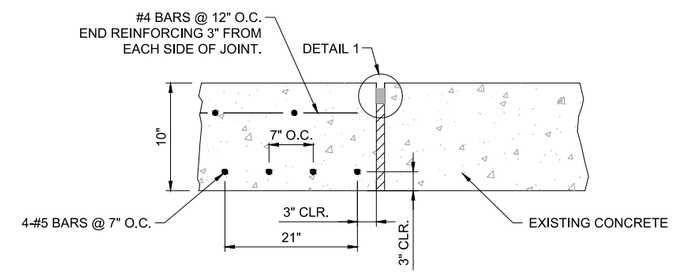

6 / C-100 TYPE A-1-REINFORCED ISOLATION JOINT

SCALE: NONE

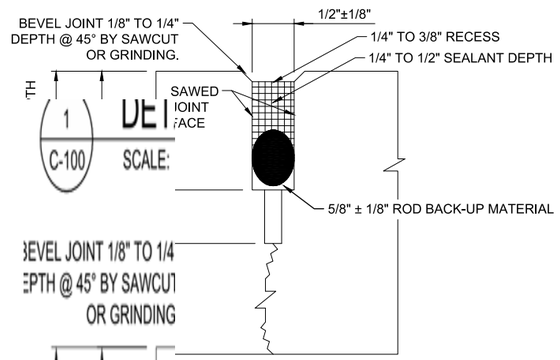

1 / C-100 DETAIL 2-CONTRACTION JOINTS

SCALE: NONE

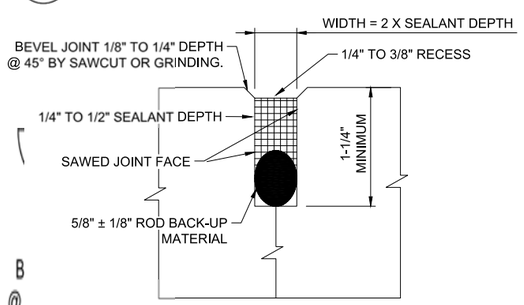

3 / C-100 DETAIL 3-CONSTRUCTION JOINTS

SCALE: NONE

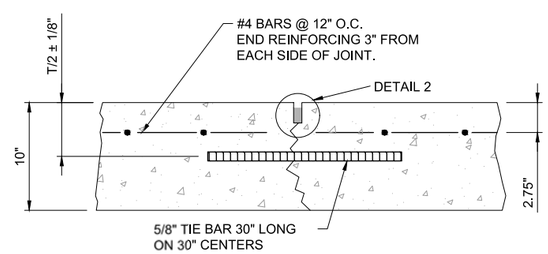

4 / C-100 TYPE B-HINGED CONTRACTION JOINT

SCALE: NONE

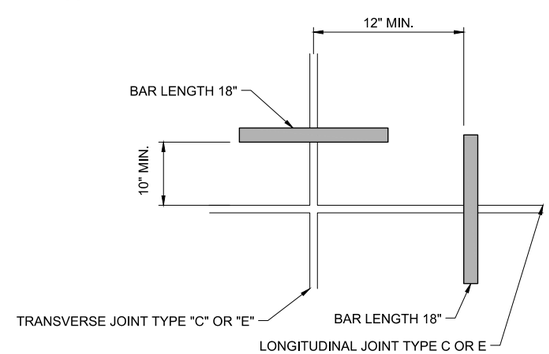

5 / C-100 DOWEL BARS AT SLAB CORNERS (PLAN VIEW)

SCALE: NONE

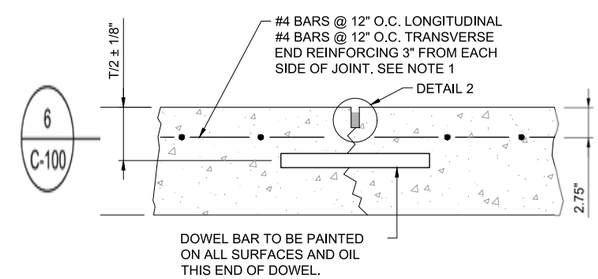

6 / C-100 TYPE C-DOWELED CONTRACTION JOINT

SCALE: NONE

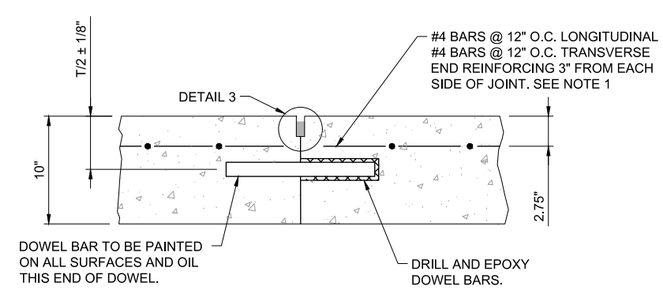

8 / C-100 TYPE E-DOWELED CONSTRUCTION JOINT

SCALE: NONE

GARVER

© 2017 GARVER, LLC
THIS DOCUMENT, ALONG WITH THE IDEAS AND DESIGNS CONVEYED HEREIN, SHALL BE CONSIDERED INSTRUMENTS OF PROFESSIONAL SERVICE AND ARE PROPERTY OF GARVER, LLC. ANY USE, REPRODUCTION, OR DISTRIBUTION OF THIS DOCUMENT, ALONG WITH THE IDEAS AND DESIGN CONTAINED HEREIN, IS PROHIBITED UNLESS AUTHORIZED IN WRITING BY GARVER, LLC OR EXPLICITLY ALLOWED IN THE GOVERNING PROFESSIONAL SERVICES AGREEMENT FOR THIS WORK.

REGISTRATION NO. F-5713

STATE OF TEXAS
COLIN M. BIBLE
107159
LICENSED PROFESSIONAL ENGINEER

DIGITALLY SIGNED 12/26/2017

REV.	DATE	DESCRIPTION	BY

ADDISON AIRPORT
ADDISON, TEXAS

WING AVIATION APRON CONNECTOR AND CLAIRE CHENNAULT STREET DRIVEWAY RECONSTRUCTION

WING AVIATION APRON CONNECTOR - DETAILS (BASE BID 1)

JOB NO.: 17081100
DATE: NOV 2017
DESIGNED BY: JAH
DRAWN BY: JAH

BAR IS ONE INCH ON ORIGINAL DRAWING
0 1"
IF NOT ONE INCH ON THIS SHEET, ADJUST SCALES ACCORDINGLY.

DRAWING NUMBER
C-100

SHEET NUMBER **11**

der no. 3\ADS-SBA-C100-TS.dwder no. 3\ADS-SBA-C100-TS.dwg Last Save: 11/17/2017 9:38 AM Last saved by: KKRuabana
no.ctb Plot Scale: 1:1 Plot Date: no.ctb Plot Scale: 1:1 Plot Date: 12/26/2017 1:58 PM Plotter used: AutoCAD PDF (General Documentation).pc3

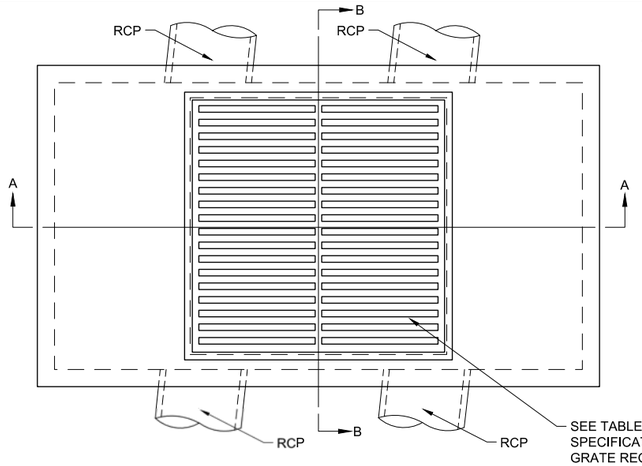

1A C-101 PLAN (SINGLE GRATE)
SCALE: NONE

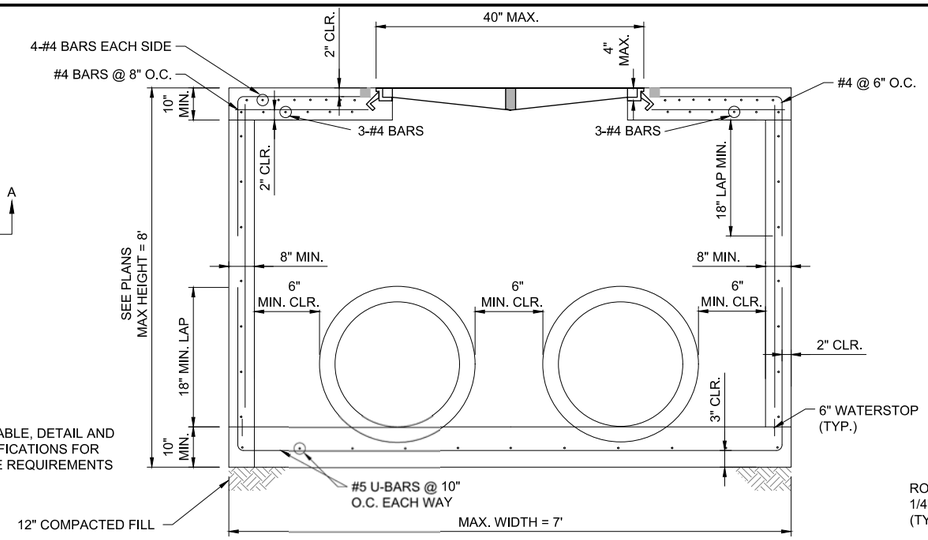

1B C-101 SECTION "A-A"
SCALE: NONE

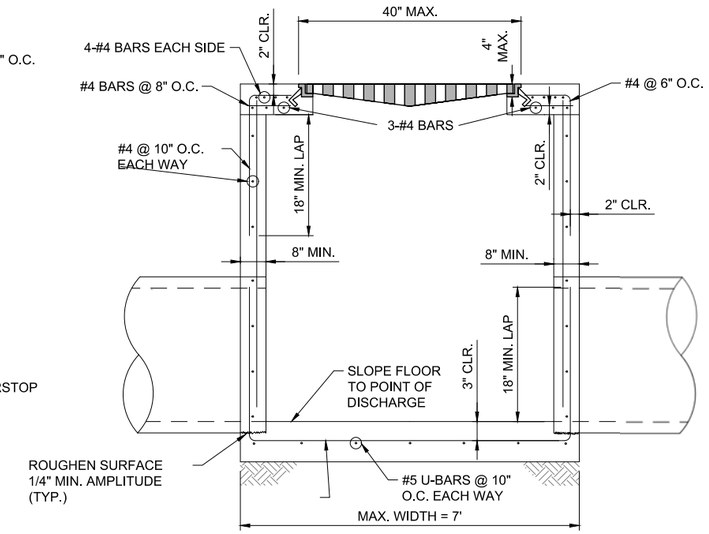

1C C-101 SECTION "B-B"
SCALE: NONE

1 C-101 AIRFIELD GRATE INLET (STANDARD)
SCALE: NONE

NOTE:

MINIMUM STEEL REINFORCEMENT LAP SHALL BE APPLIED WHERE APPLICABLE. IF THE CONTRACTOR CANNOT MEET THE MINIMUM LAP REQUIREMENT DUE TO THE INLET HEIGHT, THE CONTRACTOR SHALL LAP STEEL THE MAXIMUM AVAILABLE LENGTH.

GRATE DESIGN PARAMETERS	
MATERIAL	DUCTILE IRON
WEIR PERIMETER	9.8 FT. MIN.
FREE OPEN AREA	2.4 S.F. MIN.
WHEEL LOADING	40,000 LBS MIN.

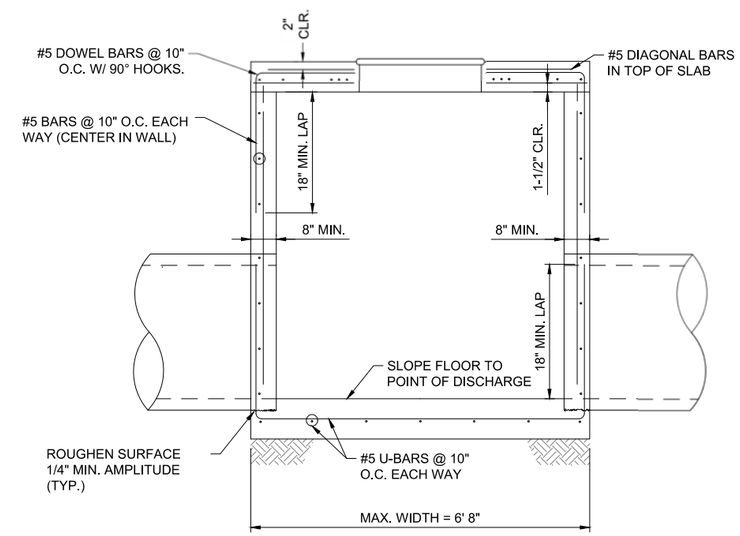

2C C-101 SECTION "B-B"
SCALE: NONE

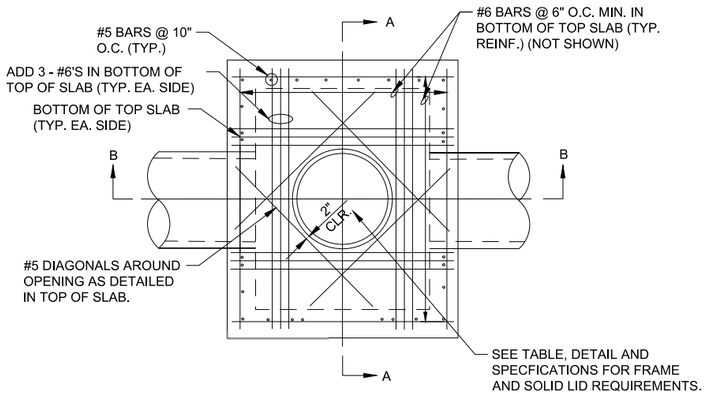

2A C-101 PLAN
SCALE: NONE

MANHOLE COVER DESIGN PARAMETERS	
MATERIAL	CAST IRON
WHEEL LOADING	40,000 LBS MIN.
OPENING	32" MIN.

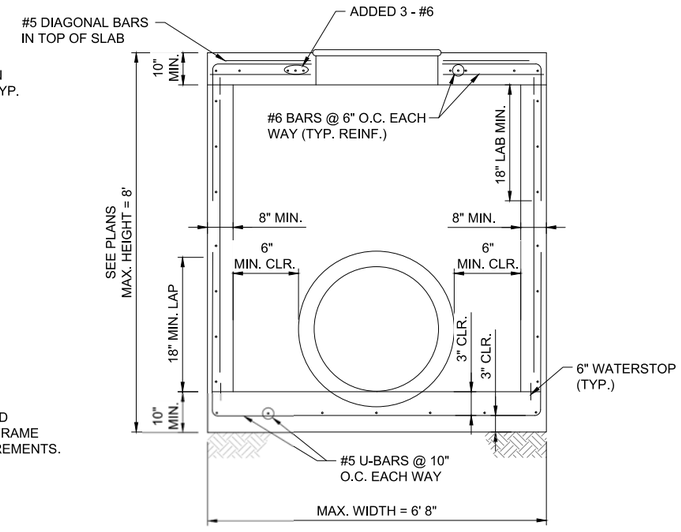

2B C-101 SECTION "A-A"
SCALE: NONE

NOTE:

MINIMUM STEEL REINFORCEMENT LAP SHALL BE APPLIED WHERE APPLICABLE. IF THE CONTRACTOR CANNOT MEET THE MINIMUM LAP REQUIREMENT DUE TO THE INLET HEIGHT, THE CONTRACTOR SHALL LAP STEEL THE MAXIMUM AVAILABLE LENGTH.

2 C-101 AIRFIELD JUNCTION BOX (STANDARD)
SCALE: NONE

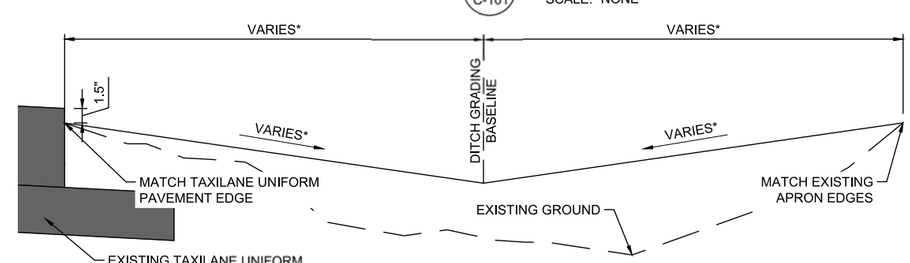

3 C-101 DITCH GRADING TYPICAL SECTION
SCALE: NONE
*SEE LAYOUT PLAN FOR DITCH ELEVATIONS AND EXTENTS OF GRADING.

GARVER

© 2017 GARVER, LLC
THIS DOCUMENT, ALONG WITH THE IDEAS AND DESIGNS CONVEYED HEREIN, SHALL BE CONSIDERED INSTRUMENTS OF PROFESSIONAL SERVICE AND ARE PROPERTY OF GARVER, LLC. ANY USE, REPRODUCTION, OR DISTRIBUTION OF THIS DOCUMENT, ALONG WITH THE IDEAS AND DESIGN CONTAINED HEREIN, IS PROHIBITED UNLESS AUTHORIZED IN WRITING BY GARVER, LLC OR EXPLICITLY ALLOWED IN THE GOVERNING PROFESSIONAL SERVICES AGREEMENT FOR THIS WORK.

REGISTRATION NO. F-5713

STATE OF TEXAS
COLIN M. BIBLE
107159
LICENSED PROFESSIONAL ENGINEER
DIGITALLY SIGNED 12/26/2017

REV.	DATE	DESCRIPTION	BY

ADDISON AIRPORT
ADDISON, TEXAS

WING AVIATION APRON CONNECTOR AND CLAIRE CHENNAULT STREET DRIVEWAY RECONSTRUCTION

WING AVIATION DRAINAGE DETAILS

JOB NO.: 17081100
DATE: NOV 2017
DESIGNED BY: JAH
DRAWN BY: JAH

BAR IS ONE INCH ON ORIGINAL DRAWING
0 1"
IF NOT ONE INCH ON THIS SHEET, ADJUST SCALES ACCORDINGLY.

DRAWING NUMBER C-101

SHEET NUMBER 12

File: I:\2017\17081100 - ads on-call\Drawings\work order no. 3\ADS-SBA-C201-DD.dwg Last Save: 11/17/2017 10:35 AM Last saved by: KKRutabana
Last plotted by: Beville, Brandon C. Plot Style: AECmono.ctb Plot Scale: 1:1 Plot Date: 12/26/2017 1:59 PM Plotter used: _AutoCAD PDF (General Documentation).pc3

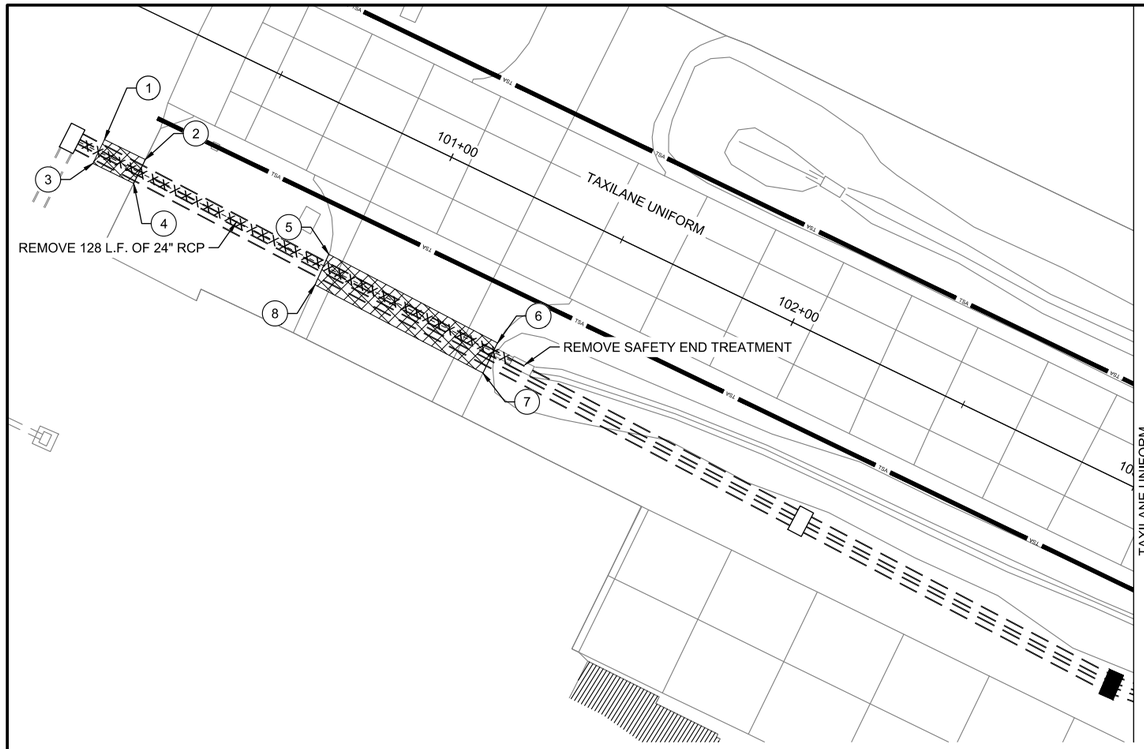

FULL DEPTH PAVEMENT REMOVAL BOUNDARIES

POINT NO.	NORTHING	EASTING
1	7041122.80	2479070.15
2	7041127.08	2479081.36
3	7041116.26	2479072.64
4	7041120.54	2479083.85
5	7041145.39	2479132.68
6	7041161.96	2479180.24
7	7041153.70	2479183.38
8	7041137.22	2479136.08
9	7041358.75	2479532.28
10	7041400.69	2479571.28
11	7041383.08	2479582.22
12	7041348.73	2479550.28
13	7041430.68	2479680.08
14	7041539.68	2479781.57
15	7041538.06	2479783.33
16	7041428.57	2479682.11

N

0 10' 20' 40' 60'
(IN FEET)

LEGEND

PAVEMENT REMOVAL

-X-X-X-X-X-X- PIPE REMOVAL

NOTES:
VARIANCE IN EXISTING PAVEMENT SHALL NOT WARRANT ADDITIONAL PAYMENT.

CAUTION: UNDERGROUND UTILITIES EXIST WITHIN AND ADJACENT TO THE LIMITS OF CONSTRUCTION. AN ATTEMPT HAS BEEN MADE TO LOCATE THESE UTILITIES ON THE PLANS. HOWEVER, ALL EXISTING UTILITIES MAY NOT BE SHOWN AND THE ACTUAL LOCATIONS OF THE UTILITIES MAY VARY FROM THE LOCATIONS SHOWN. PRIOR TO BEGINNING ANY TYPE OF EXCAVATION, THE CONTRACTOR SHALL CONTACT THE UTILITIES ON THE GROUND. THE CONTRACTOR SHALL MAINTAIN THE UTILITY LOCATION MARKINGS UNTIL THEY ARE NO LONGER NECESSARY.

TEXAS STATE LAW, THE UNDERGROUND FACILITIES DAMAGE PREVENTION ACT, REQUIRES SUFFICIENT ADVANCE NOTIFICATION THROUGH THE TEXAS ONE-CALL SYSTEM CENTER BEFORE EXCAVATING USING MECHANIZED EQUIPMENT OF EXPLOSIVES (EXCEPT IN THE CASE OF AN EMERGENCY). THE ONE-CALL SYSTEM PHONE NUMBER IS IS 1-800-245-4545. THE CONTRACTOR IS ADVISED THAT THERE IS A SEVERE PENALTY FOR NOT MAKING THIS CALL. NOT ALL UTILITY COMPANIES ARE MEMBERS OF THE TEXAS ONE-CALL SYSTEM; THEREFORE, THE CONTRACTOR IS ADVISED TO CONTACT ALL NON-MEMEBER UTILITS AS WELL AS THE ONE-CALL SYSTEM.

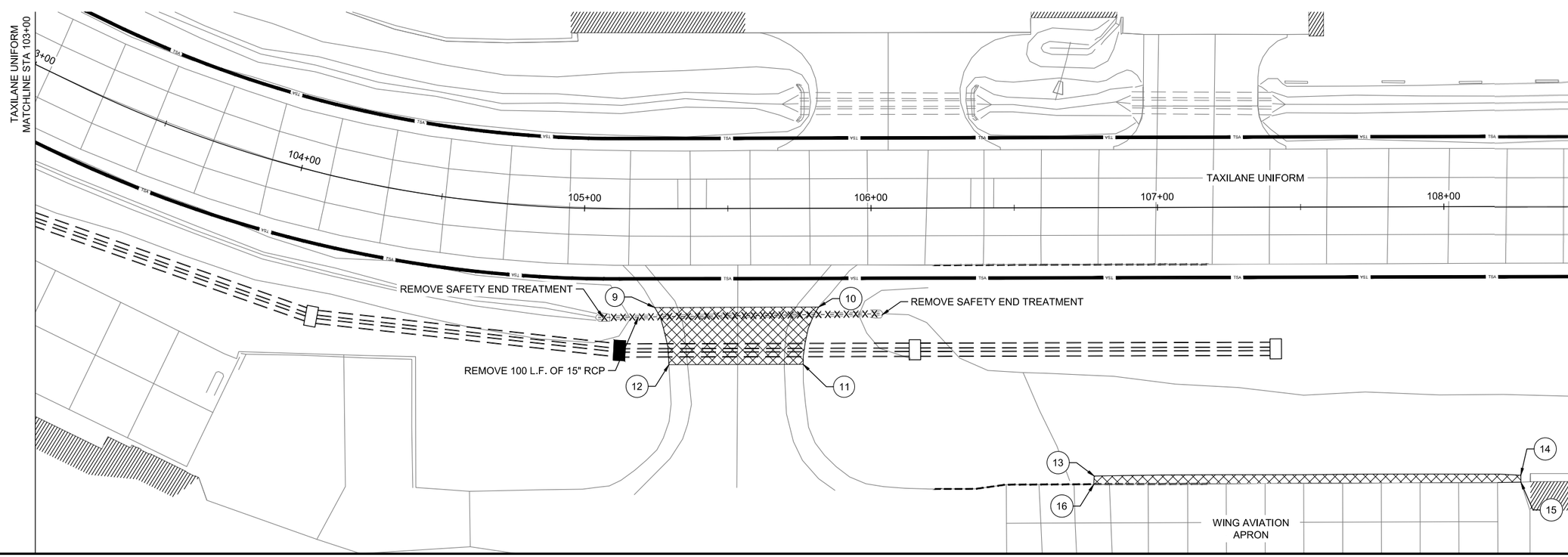

GARVER

© 2017 GARVER, LLC
THIS DOCUMENT, ALONG WITH THE IDEAS AND DESIGNS CONVEYED HEREIN, SHALL BE CONSIDERED INSTRUMENTS OF PROFESSIONAL SERVICE AND ARE PROPERTY OF GARVER, LLC. ANY USE, REPRODUCTION, OR DISTRIBUTION OF THIS DOCUMENT, ALONG WITH THE IDEAS AND DESIGN CONTAINED HEREIN, IS PROHIBITED UNLESS AUTHORIZED IN WRITING BY GARVER, LLC OR EXPLICITLY ALLOWED IN THE GOVERNING PROFESSIONAL SERVICES AGREEMENT FOR THIS WORK.

REGISTRATION NO. F-5713

STATE OF TEXAS
COLIN M. BIBLE
107159
LICENSED PROFESSIONAL ENGINEER

DIGITALLY SIGNED
12/26/2017

REV	DATE	DESCRIPTION	BY

ADDISON AIRPORT

ADDISON AIRPORT
ADDISON, TEXAS

WING AVIATION APRON CONNECTOR AND CLAIRE CHENNAULT STREET DRIVEWAY RECONSTRUCTION

WING AVIATION APRON CONNECTOR - DEMOLITION PLAN (BASE BID 1)

JOB NO.: 17081100
DATE: NOV 2017
DESIGNED BY: JAH
DRAWN BY: JAH

BAR IS ONE INCH ON ORIGINAL DRAWING
0 1"
IF NOT ONE INCH ON THIS SHEET, ADJUST SCALES ACCORDINGLY

DRAWING NUMBER
C-102

SHEET NUMBER 13

File: I:\2017\17081100 - ads on-call\Drawings\work order no. 3\ADS-SBA-C-102-DP.dwg Last Save: 11/16/2017 5:43 PM Last saved by: KKRutabana
Last plotted by: Beville, Brandon C. Plot Style: AECmono.ctb Plot Scale: 1:1 Plot Date: 12/26/2017 1:59 PM Plotter used: _AutoCAD PDF (General Documentation).pc3

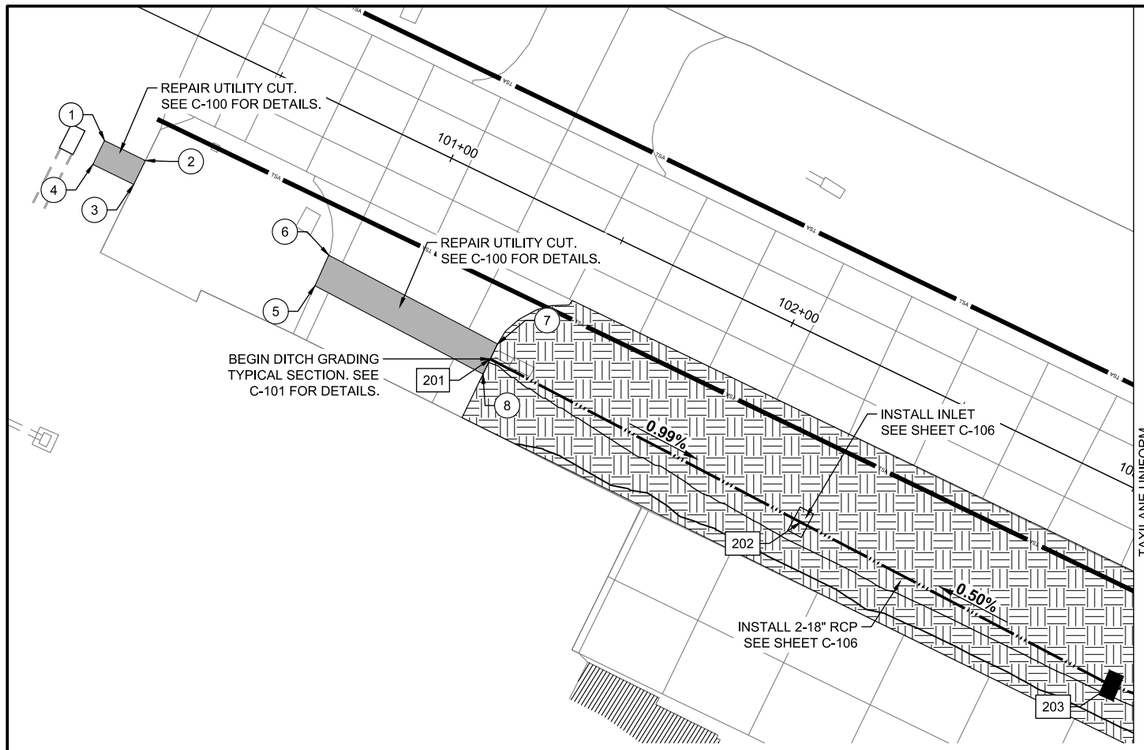

POINT TABLE			
POINT NO.	NORTHING	EASTING	ELEVATION
201	7041157.82	2479181.77	638.98
202	7041188.30	2479269.22	638.09
203	7041218.77	2479356.66	638.57
204	7041269.00	2479452.62	637.90
205	7041339.49	2479534.86	639.51
206	7041351.94	2479546.43	639.75
207	7041386.72	2479578.77	639.67
208	7041415.04	2479605.10	639.01

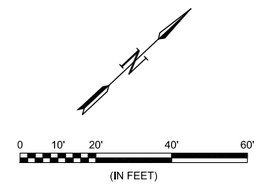

LEGEND

- PROPOSED PAVEMENT*
- PROPOSED SODDING
- PROPOSED DITCH GRADING BASELINE
- # DITCH GRADING POINTS
- # PAVING LAYOUT POINTS

*PAVEMENT RECONSTRUCTION POST UTILITY CUT SHALL UTILIZE THE SAME PAVEMENT SECTION AS THE WING AVIATION APRON CONNECTOR.

POINT TABLE			
POINT NO.	NORTHING	EASTING	ELEVATION
1	7041122.80	2479070.15	638.72
2	7041127.08	2479081.36	638.22
3	7041120.54	2479083.85	638.18
4	7041116.26	2479072.64	638.72
5	7041137.22	2479136.08	638.72
6	7041145.39	2479132.68	638.63
7	7041161.96	2479180.24	639.00
8	7041153.70	2479183.38	639.02
9	7041358.75	2479532.28	639.65
10	7041400.69	2479571.28	639.72
11	7041348.73	2479550.28	639.77
12	7041383.08	2479582.22	639.70
13	7041438.94	2479589.58	639.62
14	7041440.23	2479588.20	639.79
15	7041509.82	2479652.87	640.26
16	7041508.48	2479654.31	640.15
17	7041476.00	2479655.44	639.74
18	7041474.54	2479654.08	639.77
19	7041456.34	2479673.56	639.71
20	7041457.80	2479674.92	639.70
21	7041458.97	2479707.50	639.91
22	7041457.61	2479708.96	639.94
23	7041386.97	2479645.42	639.80
24	7041388.32	2479643.96	639.68
25	7041420.76	2479642.80	639.69
26	7041422.22	2479644.16	639.71
27	7041441.53	2479623.49	639.77
28	7041440.07	2479622.12	639.73

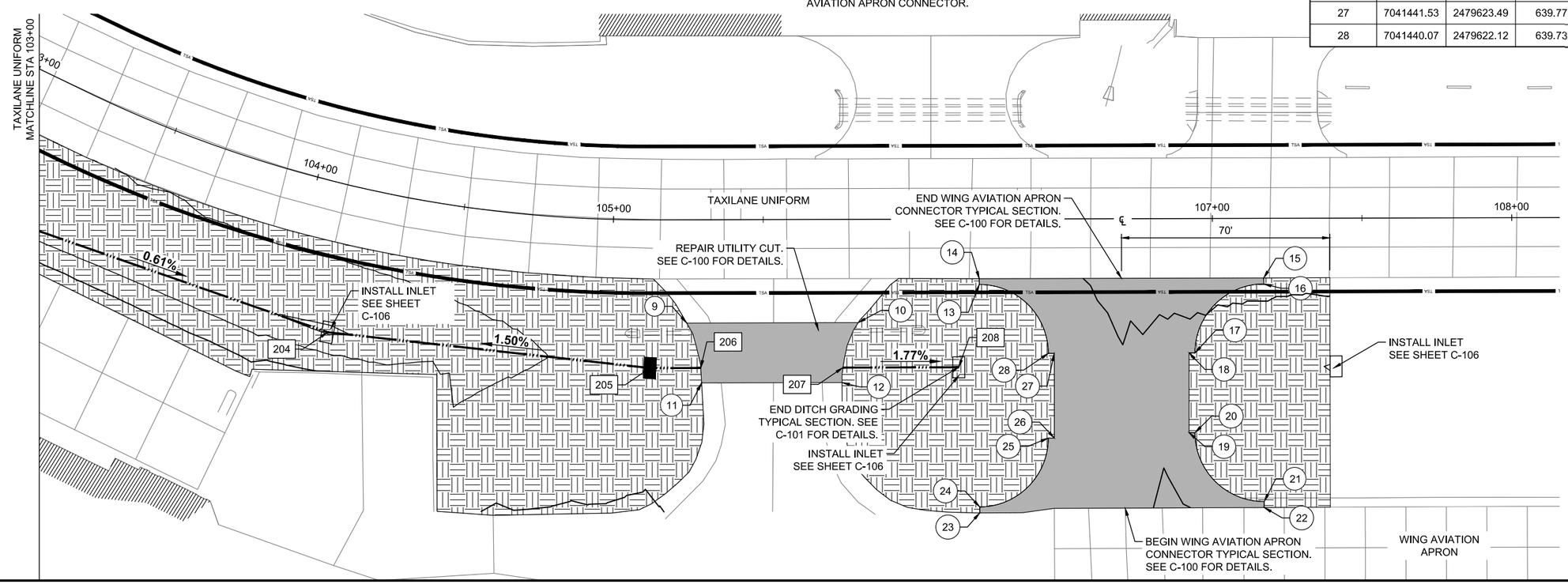

GARVER

© 2017 GARVER, LLC
THIS DOCUMENT, ALONG WITH THE IDEAS AND DESIGNS CONVEYED HEREIN, SHALL BE CONSIDERED INSTRUMENTS OF PROFESSIONAL SERVICE AND ARE PROPERTY OF GARVER, LLC. ANY USE, REPRODUCTION, OR DISTRIBUTION OF THIS DOCUMENT, ALONG WITH THE IDEAS AND DESIGN CONTAINED HEREIN, IS PROHIBITED UNLESS AUTHORIZED IN WRITING BY GARVER, LLC OR EXPLICITLY ALLOWED IN THE GOVERNING PROFESSIONAL SERVICES AGREEMENT FOR THIS WORK.

REGISTRATION NO.
F-5713

STATE OF TEXAS
COLIN M. BIBLE
107159
LICENSED
PROFESSIONAL ENGINEER

DIGITALLY SIGNED
12/26/2017

REV.	DATE	DESCRIPTION	BY

ADDISON AIRPORT

ADDISON AIRPORT
ADDISON, TEXAS

WING AVIATION APRON CONNECTOR
AND CLAIRE CHENNAULT STREET
DRIVEWAY RECONSTRUCTION

WING AVIATION
APRON CONNECTOR -
LAYOUT PLAN (BASE
BID 1)

JOB NO.: 17081100
DATE: NOV 2017
DESIGNED BY: JAH
DRAWN BY: JAH

BAR IS ONE INCH ON ORIGINAL DRAWING
0 1"
IF NOT ONE INCH ON THIS SHEET, ADJUST SCALES ACCORDINGLY.

DRAWING NUMBER
C-103

SHEET NUMBER **14**

File: I:\2017\17081100 - ads on-call\Drawings\work order no. 3\ADS-SBA-C103-LP.dwg Last Save: 11/17/2017 9:38 AM Last saved by: KKRutabana
Last plotted by: Beville, Brandon C. Plot Style: AECmono.ctb Plot Scale: 1:1 Plot Date: 12/26/2017 1:59 PM Plotter used: _AutoCAD PDF (General Documentation).pc3

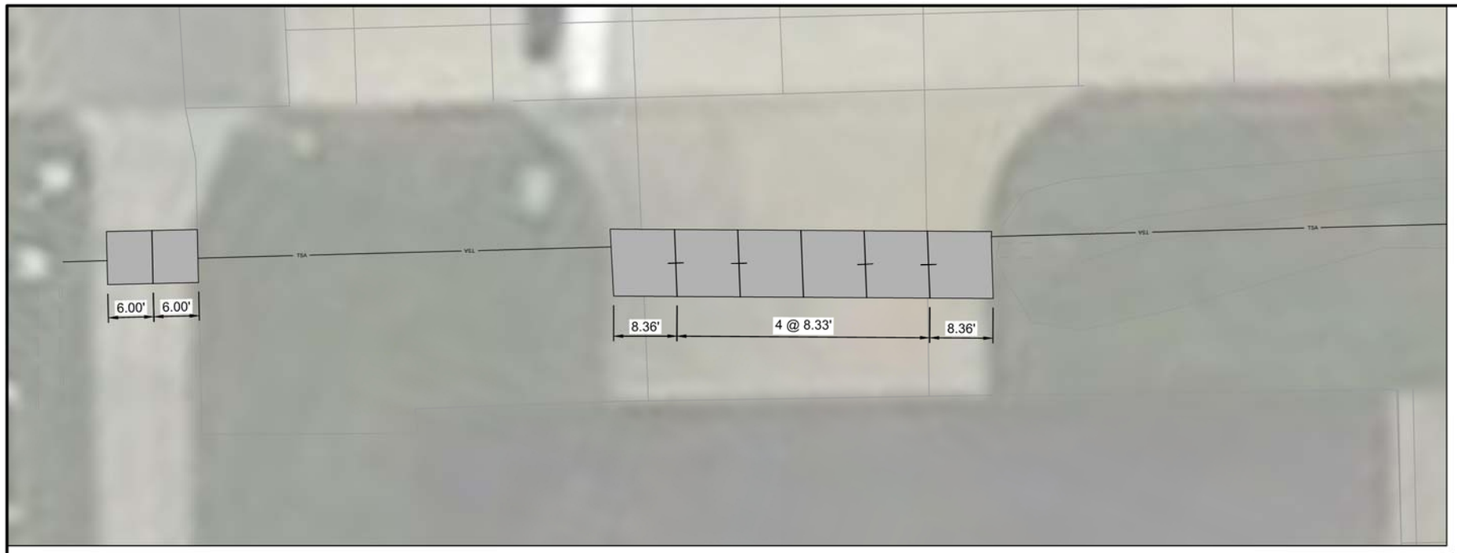

0 5' 10' 20' 30'
(IN FEET)

PAVEMENT JOINT LEGEND

- TYPE "A-1" - REINFORCED ISOLATION JOINT
- TYPE "E" - DOWELED CONSTRUCTION JOINT
- TYPE "C" - DOWELED CONTRACTION JOINT
- TYPE "B" - HINGED CONTRACTION JOINT

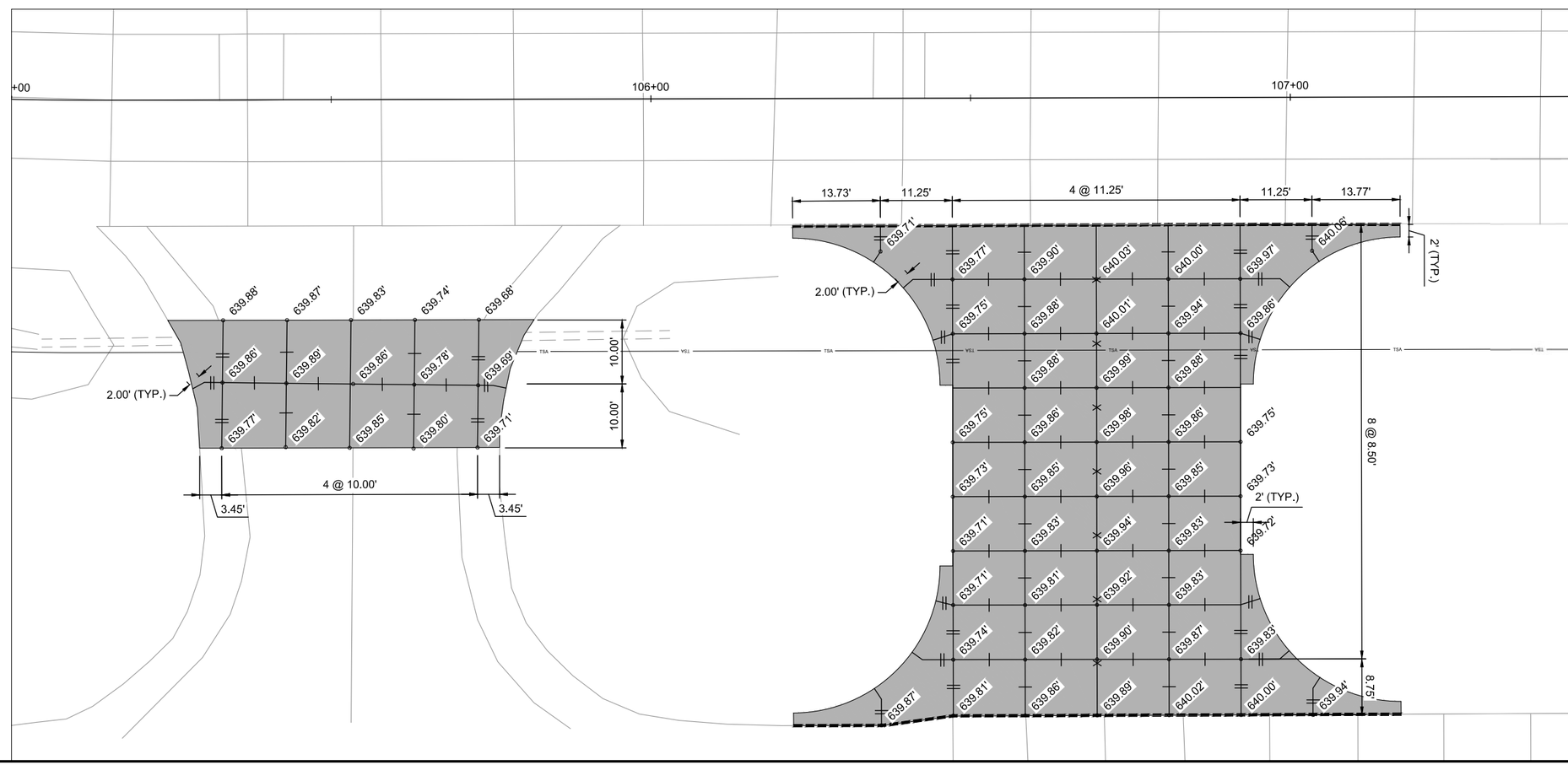

GARVER

© 2017 GARVER, LLC
THIS DOCUMENT, ALONG WITH THE IDEAS AND DESIGNS CONVEYED HEREIN, SHALL BE CONSIDERED INSTRUMENTS OF PROFESSIONAL SERVICE AND ARE PROPERTY OF GARVER, LLC. ANY USE, REPRODUCTION, OR DISTRIBUTION OF THIS DOCUMENT, ALONG WITH THE IDEAS AND DESIGN CONTAINED HEREIN, IS PROHIBITED UNLESS AUTHORIZED IN WRITING BY GARVER, LLC OR EXPLICITLY ALLOWED IN THE GOVERNING PROFESSIONAL SERVICES AGREEMENT FOR THIS WORK.

REGISTRATION NO. F-5713

STATE OF TEXAS
COLIN M. BIBLE
107159
LICENSED PROFESSIONAL ENGINEER

DIGITALLY SIGNED
12/26/2017

REV.	DATE	DESCRIPTION	BY

ADDISON AIRPORT
ADDISON, TEXAS

WING AVIATION APRON CONNECTOR AND CLAIRE CHENNAULT STREET DRIVEWAY RECONSTRUCTION

WING AVIATION APRON CONNECTOR - JOINT LAYOUT PLAN (BASE BID 1)

JOB NO.: 17081100
DATE: NOV 2017
DESIGNED BY: JAH
DRAWN BY: JAH

BAR IS ONE INCH ON ORIGINAL DRAWING
0 1"
IF NOT ONE INCH ON THIS SHEET, ADJUST SCALES ACCORDINGLY.

DRAWING NUMBER
C-104

SHEET NUMBER 15

File: I:\2017\17081100 - ads on-call\Drawings\work order no. 3\ADS-SBA-C104-JP.dwg Last Save: 11/16/2017 2:53 PM Last saved by: KKRutabana
Last plotted by: Beville, Brandon C. Plot Style: AECmono.ctb Plot Scale: 1:1 Plot Date: 12/26/2017 1:59 PM Plotter used: _AutoCAD PDF (General Documentation).pc3

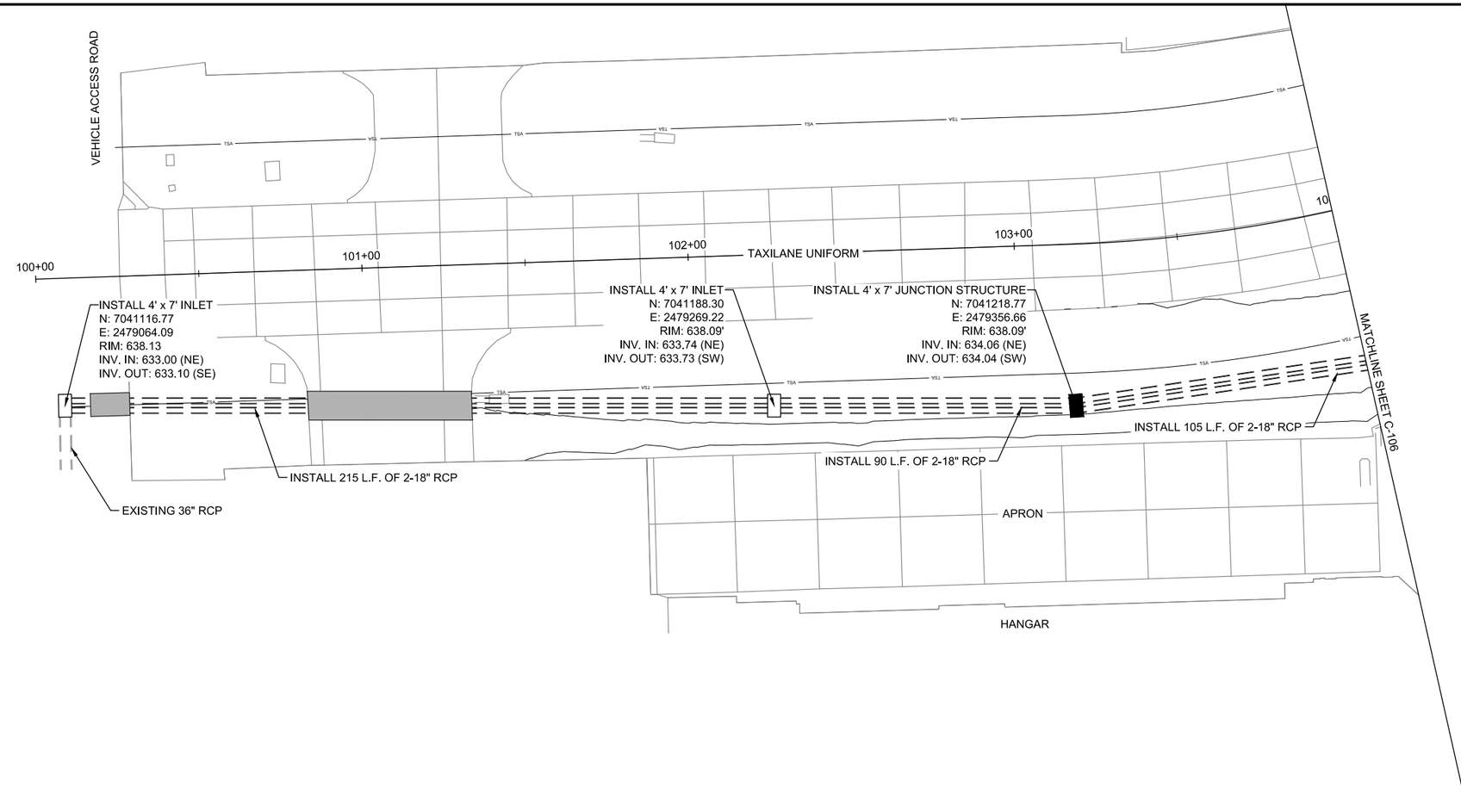

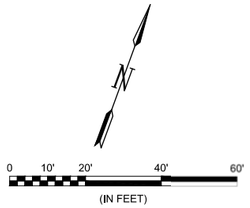

LEGEND

- PROPOSED PAVEMENT
- PROPOSED 2-18" RCP
- EXISTING RCP

DRAINAGE PROFILE

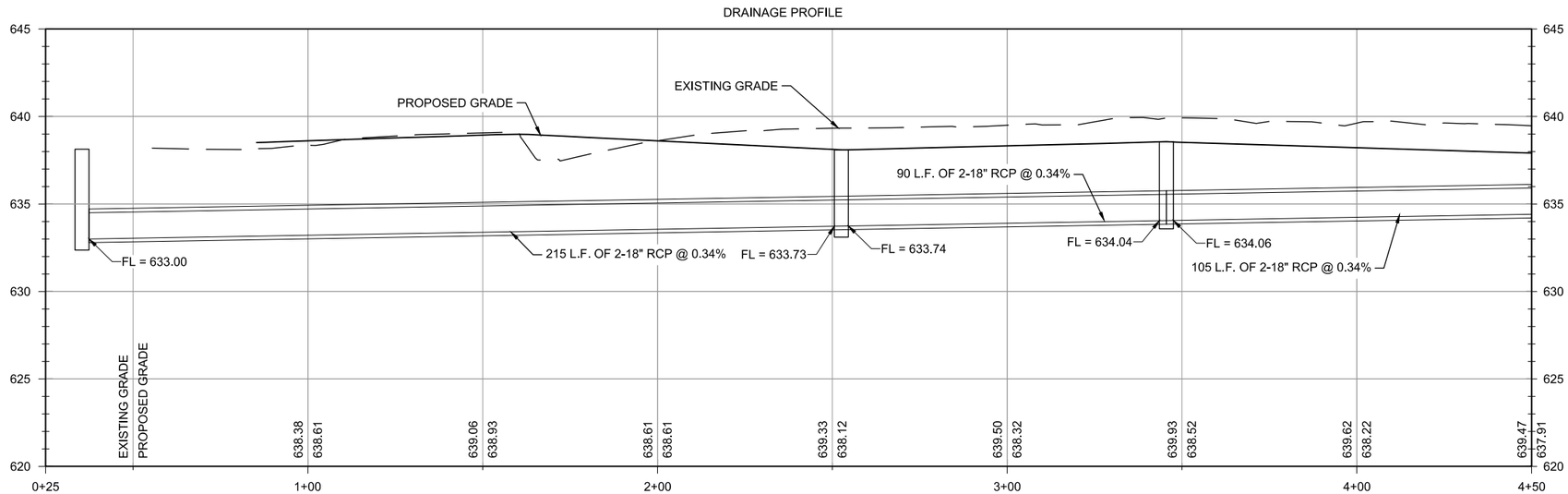

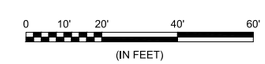

VERTICAL: 1" = 4'

GARVER

© 2017 GARVER, LLC
THIS DOCUMENT, ALONG WITH THE IDEAS AND DESIGNS CONVEYED HEREIN, SHALL BE CONSIDERED INSTRUMENTS OF PROFESSIONAL SERVICE AND ARE PROPERTY OF GARVER, LLC. ANY USE, REPRODUCTION, OR DISTRIBUTION OF THIS DOCUMENT, ALONG WITH THE IDEAS AND DESIGN CONTAINED HEREIN, IS PROHIBITED UNLESS AUTHORIZED IN WRITING BY GARVER, LLC OR EXPLICITLY ALLOWED IN THE GOVERNING PROFESSIONAL SERVICES AGREEMENT FOR THIS WORK.

REGISTRATION NO. F-5713

STATE OF TEXAS
COLIN M. BIBLE
107159
LICENSED PROFESSIONAL ENGINEER

DIGITALLY SIGNED
12/26/2017

REV.	DATE	DESCRIPTION	BY

ADDISON AIRPORT
ADDISON, TEXAS

WING AVIATION APRON CONNECTOR AND CLAIRE CHENNAULT STREET DRIVEWAY RECONSTRUCTION

WING AVIATION APRON CONNECTOR - DRAINAGE PLAN I (BASE BID 1)

JOB NO.: 17081100
DATE: NOV 2017
DESIGNED BY: JAH
DRAWN BY: JAH

BAR IS ONE INCH ON ORIGINAL DRAWING
0 1"
IF NOT ONE INCH ON THIS SHEET, ADJUST SCALES ACCORDINGLY.

DRAWING NUMBER
C-105

SHEET NUMBER 16

File: I:\2017\17081100 - ads on-call\Drawings\work order no. 3\ADS-SBA-C105-LP.dwg Last Save: 11/16/2017 5:43 PM Last saved by: KKRutabana
Last plotted by: Beville, Brandon C. Plot Style: AECmono.ctb Plot Scale: 1:1 Plot Date: 12/26/2017 1:59 PM Plotter used: _AutoCAD PDF (General Documentation).pc3

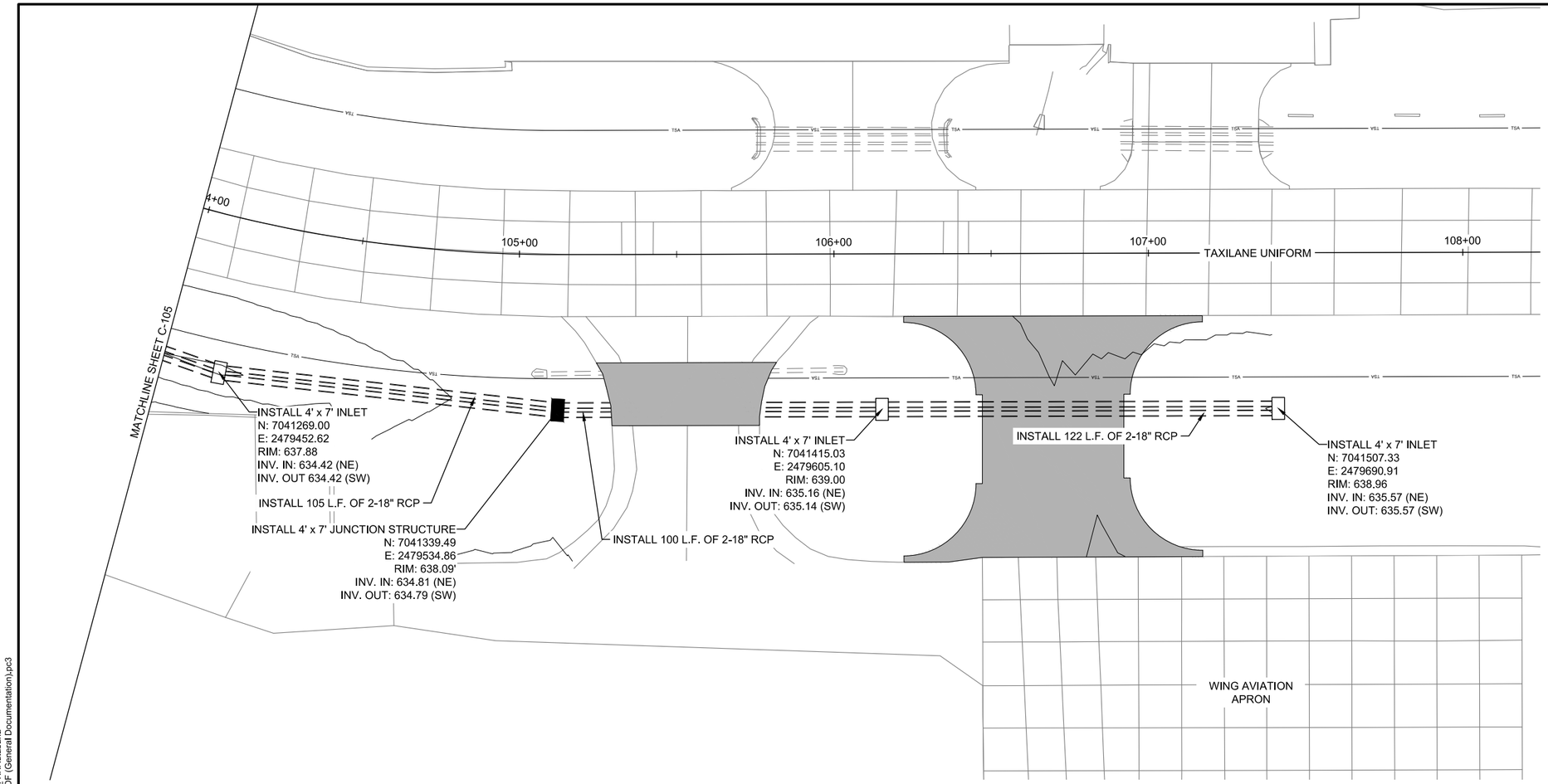

0 10' 20' 40' 60'
(IN FEET)

LEGEND

- PROPOSED PAVEMENT
- PROPOSED 2-18" RCP
- EXISTING RCP

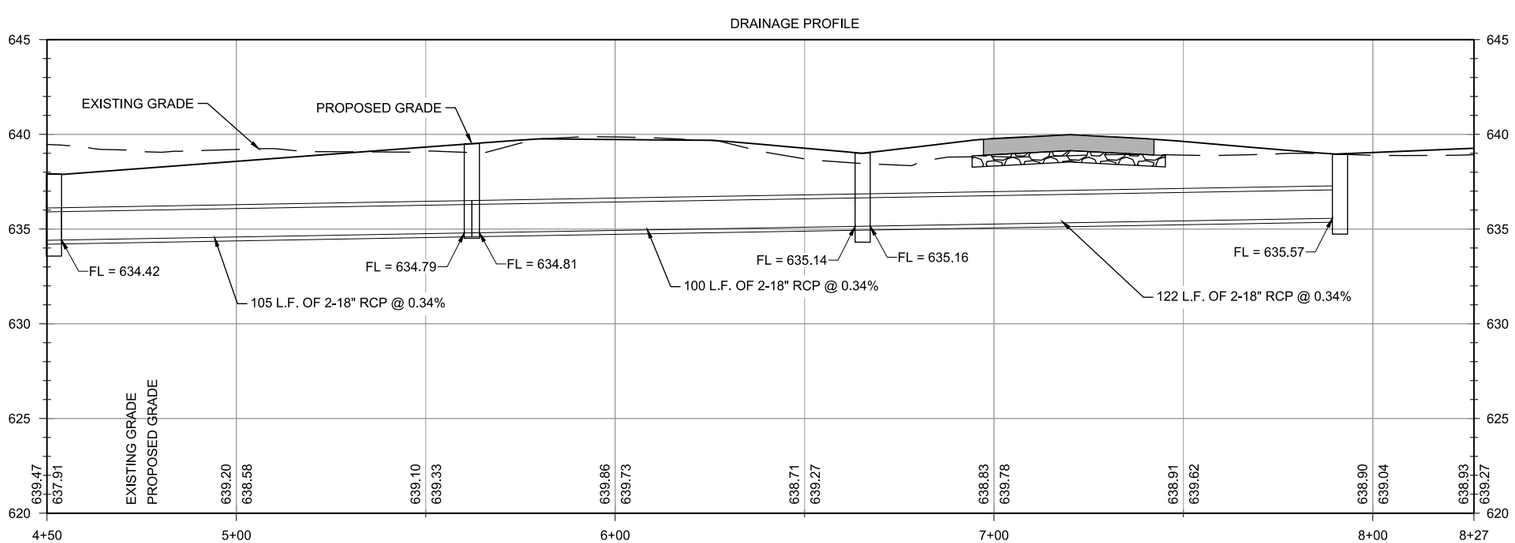

0 10' 20' 40' 60'
(IN FEET)
VERTICAL: 1" = 4'

GARVER

© 2017 GARVER, LLC
THIS DOCUMENT, ALONG WITH THE IDEAS AND DESIGNS CONVEYED HEREIN, SHALL BE CONSIDERED INSTRUMENTS OF PROFESSIONAL SERVICE AND ARE PROPERTY OF GARVER, LLC. ANY USE, REPRODUCTION, OR DISTRIBUTION OF THIS DOCUMENT, ALONG WITH THE IDEAS AND DESIGN CONTAINED HEREIN, IS PROHIBITED UNLESS AUTHORIZED IN WRITING BY GARVER, LLC OR EXPLICITLY ALLOWED IN THE GOVERNING PROFESSIONAL SERVICES AGREEMENT FOR THIS WORK.

REGISTRATION NO.
F-5713

STATE OF TEXAS
COLIN M. BIBLE
107159
LICENSED
PROFESSIONAL ENGINEER

DIGITALLY SIGNED
12/26/2017

REV.	DATE	DESCRIPTION	BY

ADDISON AIRPORT
ADDISON, TEXAS

WING AVIATION APRON CONNECTOR AND CLAIRE CHENNAULT STREET DRIVEWAY RECONSTRUCTION

WING AVIATION APRON CONNECTOR - DRAINAGE PLAN II (BASE BID 1)

JOB NO.: 17081100
DATE: NOV 2017
DESIGNED BY: JAH
DRAWN BY: JAH

BAR IS ONE INCH ON ORIGINAL DRAWING
0 1"
IF NOT ONE INCH ON THIS SHEET, ADJUST SCALES ACCORDINGLY.

DRAWING NUMBER
C-106

SHEET NUMBER 17

File: I:\2017\17081100 - ads on-call\Drawings\work order no. 3\ADS-SBA-C105-LP.dwg Last Save: 11/16/2017 5:43 PM Last saved by: KKRutabana
Last plotted by: Beville, Brandon C. Plot Style: AECmono.ctb Plot Scale: 1:1 Plot Date: 12/26/2017 1:59 PM Plotter used: _AutoCAD PDF (General Documentation).pc3

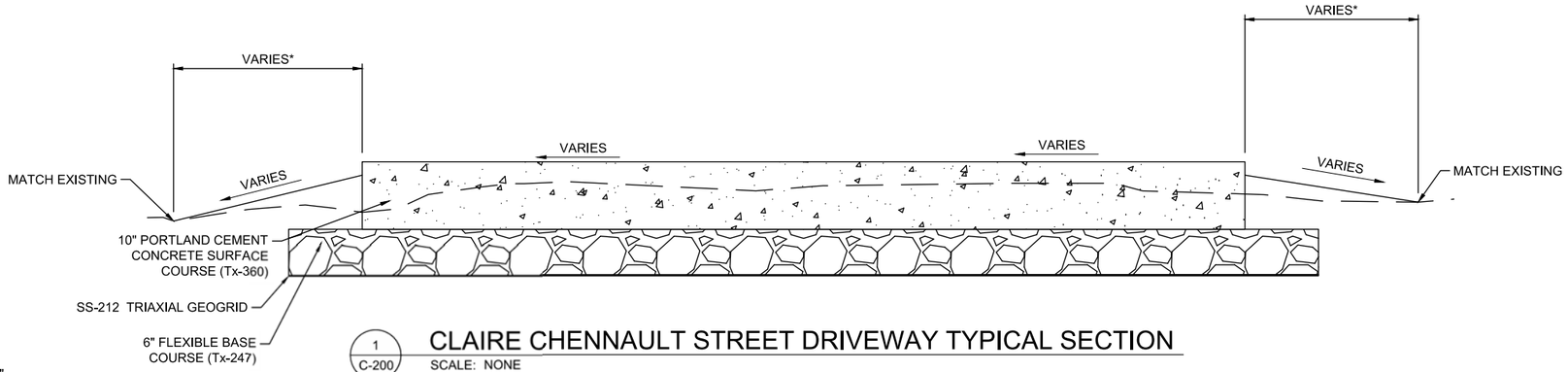

1 / C-200 CLAIRE CHENNAULT STREET DRIVEWAY TYPICAL SECTION

SCALE: NONE

*SEE PLANS FOR LIMITS

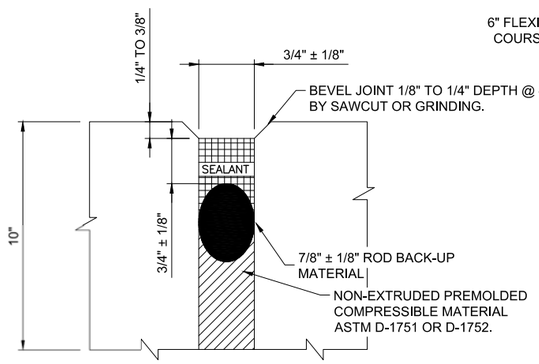

2 / C-200 DETAIL 1-ISOLATION JOINTS

SCALE: NONE

SYMBOLS

- SEALANT
- ROD BACK-UP MATERIAL CLOSED-CELL RESILIENT FOAM OR SPONGE RUBBER
- RESILIENT FILLER

DOWEL BAR LEGEND
10" SLAB THICKNESS
DIAMETER = 3/4" LENGTH = 18" SPACING = 12" O.C.

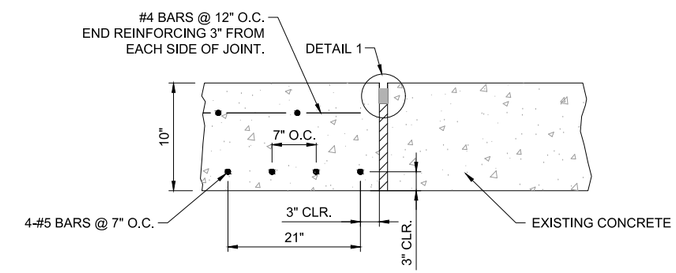

7 / C-200 TYPE A-1-REINFORCED ISOLATION JOINT

SCALE: NONE

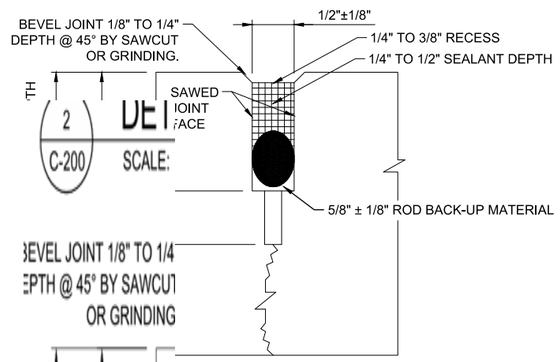

2 / C-200 DETAIL 2-CONTRACTION JOINTS

SCALE: NONE

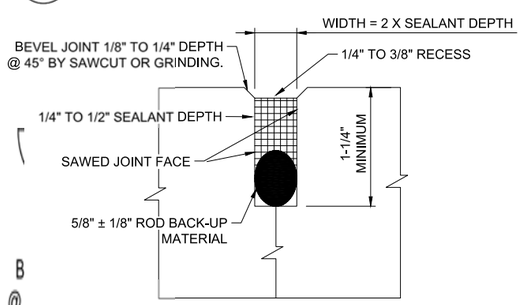

4 / C-200 DETAIL 3-CONSTRUCTION JOINTS

SCALE: NONE

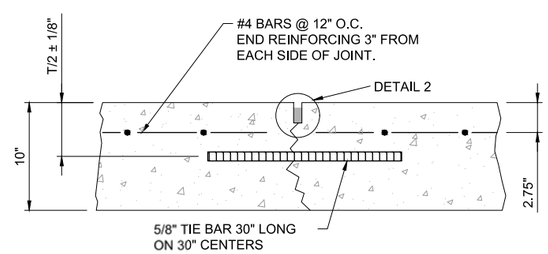

5 / C-200 TYPE B-HINGED CONTRACTION JOINT

SCALE: NONE

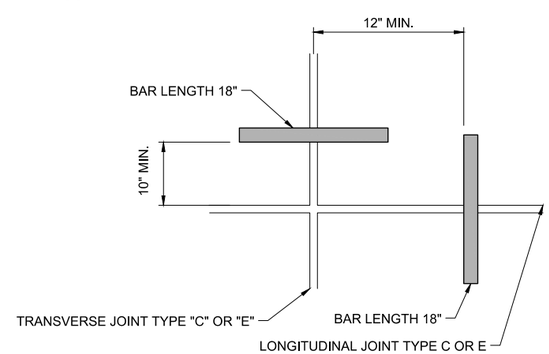

6 / C-200 DOWEL BARS AT SLAB CORNERS (PLAN VIEW)

SCALE: NONE

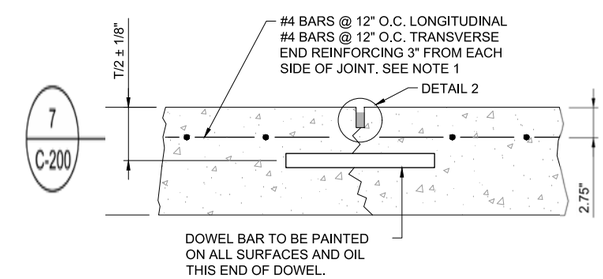

7 / C-200 TYPE C-DOWELED CONTRACTION JOINT

SCALE: NONE

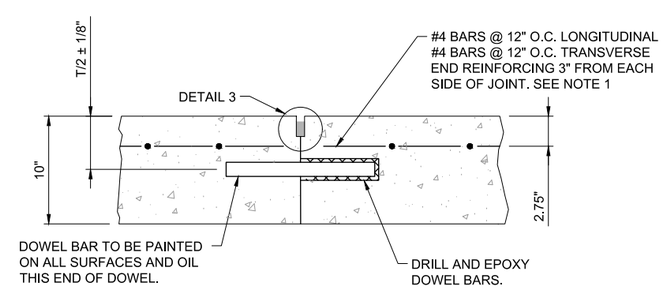

9 / C-200 TYPE E-DOWELED CONSTRUCTION JOINT

SCALE: NONE

GARVER

© 2017 GARVER, LLC
THIS DOCUMENT, ALONG WITH THE IDEAS AND DESIGNS CONVEYED HEREIN, SHALL BE CONSIDERED INSTRUMENTS OF PROFESSIONAL SERVICE AND ARE PROPERTY OF GARVER, LLC. ANY USE, REPRODUCTION, OR DISTRIBUTION OF THIS DOCUMENT, ALONG WITH THE IDEAS AND DESIGN CONTAINED HEREIN, IS PROHIBITED UNLESS AUTHORIZED IN WRITING BY GARVER, LLC OR EXPLICITLY ALLOWED IN THE GOVERNING PROFESSIONAL SERVICES AGREEMENT FOR THIS WORK.

REGISTRATION NO. F-5713

STATE OF TEXAS
COLIN M. BIBLE
107159
LICENSED PROFESSIONAL ENGINEER

DIGITALLY SIGNED 12/26/2017

REV.	DATE	DESCRIPTION	BY

ADDISON AIRPORT
ADDISON, TEXAS

WING AVIATION APRON CONNECTOR AND CLAIRE CHENNAULT STREET DRIVEWAY RECONSTRUCTION

CLAIRE CHENNAULT STREET DRIVEWAY - DETAILS (BASE BID 2)

JOB NO.: 17081100
DATE: NOV 2017
DESIGNED BY: JAH
DRAWN BY: JAH

BAR IS ONE INCH ON ORIGINAL DRAWING
0 1"
IF NOT ONE INCH ON THIS SHEET, ADJUST SCALES ACCORDINGLY.

DRAWING NUMBER C-200

SHEET NUMBER 18

Order no. 3\ADS-SBA-C200-TS.dwg Last Save: 11/16/2017 3:35 PM Last saved by: KKRubabana
Plot Date: 12/26/2017 2:00 PM Plotter used: _AutoCAD PDF (General Documentation).pc3
Plot Scale: 1:1 Plot Date: 12/26/2017 2:00 PM Plotter used: _AutoCAD PDF (General Documentation).pc3

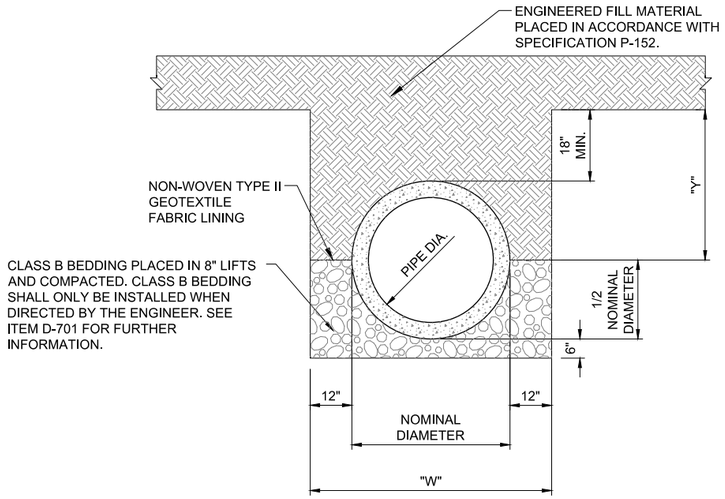

"W" = PIPE NOMINAL DIAMETER + 2' MINIMUM. TRENCH WIDTH SHALL MEET OSHA STANDARDS.

1 / C-201 **PIPE BACK FILLING**

SCALE: NONE

CONSTRUCTION SEQUENCE:

1. EXCAVATE A TRENCH AT A WIDTH OF "W". THE DITCH SHALL COMPLY WITH OSHA REGULATIONS AT ALL TIMES AND MAY REQUIRE A TRENCH SAFETY SYSTEM.
2. LINE TRENCH WITH NON-WOVEN TYPE II GEOTEXTILE FABRIC AND FOLD EXCESS MATERIAL OVER EDGES OF TRENCH AND SECURE IN PLACE WITH SMALL PILES OF CLASS B BEDDING.
3. PLACE 6" OF CLASS B BEDDING IN BOTTOM OF TRENCH FOR BEDDING MATERIAL. ENSURE SLOPE ON SURFACE OF CLASS B BEDDING COMPLIES WITH PLANS AND SPECIFICATION D-701.
4. PLACE STORM PIPE IN TRENCH USING STANDARD CONSTRUCTION PRACTICE WITH CARE TAKEN NOT TO DAMAGE PIPE.
5. BACKFILL TO 1/2 NOMINAL DIAMETER OF PIPE WITH CLASS B BEDDING PLACED IN 8" LIFTS AND COMPACTED.
6. FOLD THE TYPE II GEOTEXTILE FABRIC OVER THE BACKFILLED MATERIAL SO THAT THE FABRIC MEETS THE EDGE OF THE STORM PIPE WITH NO GAPS PRESENT.
7. PLACE ENGINEERED FILL ON TOP OF TYPE II GEOTEXTILE FABRIC PER SPECIFICATION P-152.

NOTE:
SEE TOWN OF ADDISON STD. FRAME AND COVER DETAIL.

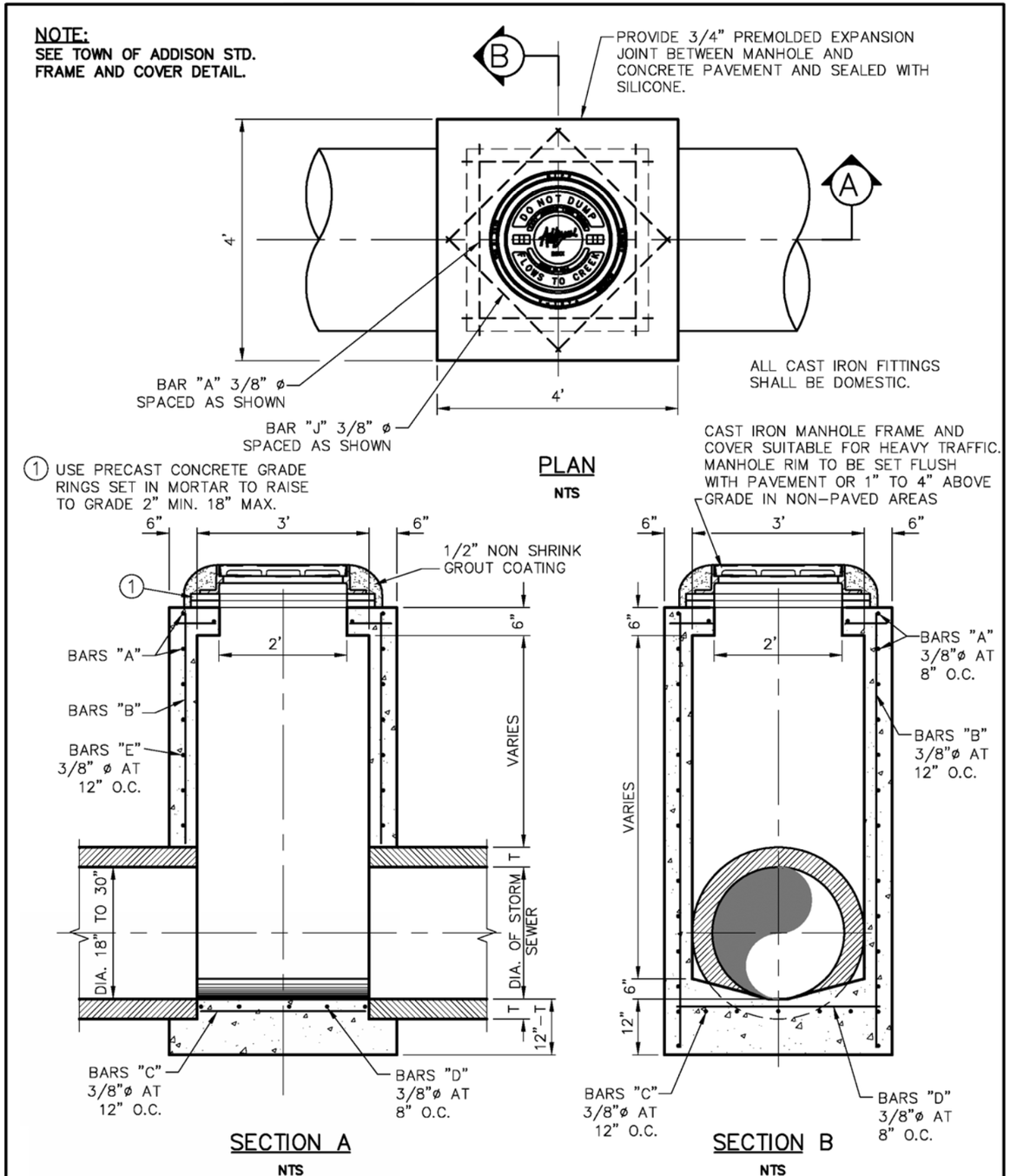

Addison!
PUBLIC WORKS DEPARTMENT

TYPE "A" STORM SEWER MANHOLE (FOR 18" TO 30" RCP)

STANDARD CONSTRUCTION DETAILS STORM DRAINAGE

DATE:	REV DATE:	SHEET :
AUGUST, 2010	–	SD–D06

GARVER

© 2017 GARVER, LLC
THIS DOCUMENT, ALONG WITH THE IDEAS AND DESIGNS CONVEYED HEREIN, SHALL BE CONSIDERED INSTRUMENTS OF PROFESSIONAL SERVICE AND ARE PROPERTY OF GARVER, LLC. ANY USE, REPRODUCTION, OR DISTRIBUTION OF THIS DOCUMENT, ALONG WITH THE IDEAS AND DESIGN CONTAINED HEREIN, IS PROHIBITED UNLESS AUTHORIZED IN WRITING BY GARVER, LLC OR EXPLICITLY ALLOWED IN THE GOVERNING PROFESSIONAL SERVICES AGREEMENT FOR THIS WORK.

REGISTRATION NO. F-5713

STATE OF TEXAS
COLIN M. BIBLE
107159
LICENSED PROFESSIONAL ENGINEER

DIGITALLY SIGNED 12/26/2017

REV.	DATE	DESCRIPTION	BY

ADDISON AIRPORT
ADDISON, TEXAS

WING AVIATION APRON CONNECTOR AND CLAIRE CHENNAULT STREET DRIVEWAY RECONSTRUCTION

CLAIRE CHENNAULT STREET DRIVEWAY DRAINAGE DETAILS

JOB NO.: 17081100
DATE: NOV 2017
DESIGNED BY: JAH
DRAWN BY: JAH

BAR IS ONE INCH ON ORIGINAL DRAWING
0 1"
IF NOT ONE INCH ON THIS SHEET, ADJUST SCALES ACCORDINGLY.

DRAWING NUMBER **C-201**

SHEET NUMBER **19**

File: I:\2017\17081100 - ads on-call\Drawings\work order no. 3\ADS-SBA-C201-DD.dwg Last Save: 11/17/2017 10:35 AM Last saved by: KKRutabana
Last plotted by: Beville, Brandon C. Plot Style: AECmono.ctb Plot Scale: 1:1 Plot Date: 12/26/2017 2:00 PM Plotter used: _AutoCAD PDF (General Documentation).pc3

FULL DEPTH PAVEMENT REMOVAL BOUNDARIES		
POINT NO.	NORTHING	EASTING
1	7041767.68	2479249.58
2	7041795.32	2479295.97
3	7041765.65	2479298.48
4	7041764.78	2479297.74
5	7041738.02	2479299.07
6	7041735.91	2479274.43
7	7041750.34	2479268.76
8	7041750.66	2479268.04

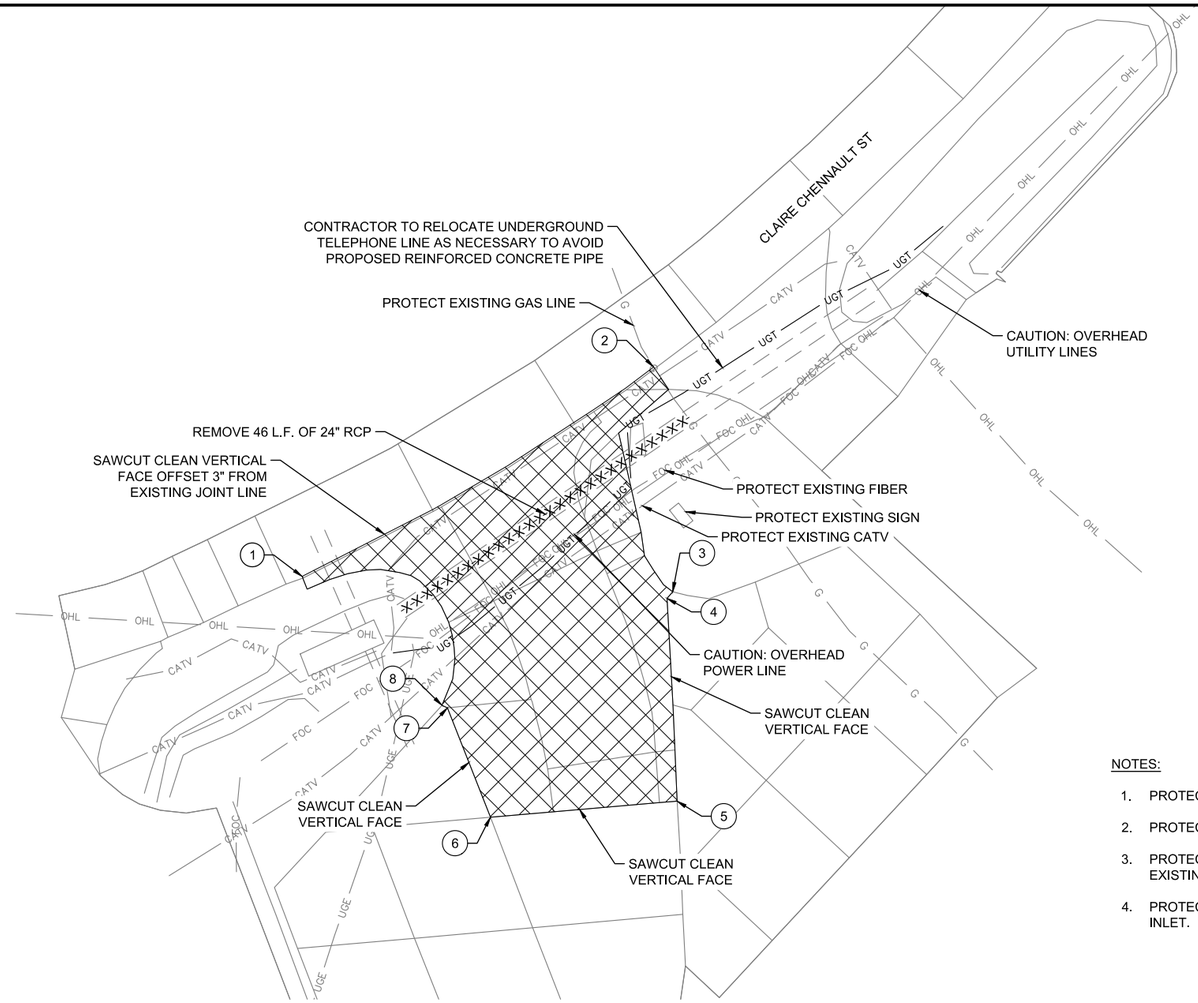

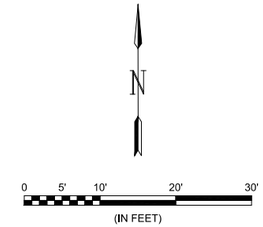

NOTES:

1. PROTECT SHRUBS ON BOTH SIDES OF DRIVE.
2. PROTECT EXISTING IRRIGATION LINES AS NECESSARY.
3. PROTECT MAILBOX AND DECORATIVE ROCK BETWEEN EXISTING DRIVES.
4. PROTECT POWER POLE NEAR EXISTING DRAINAGE INLET.

CAUTION: UNDERGROUND UTILITIES EXIST WITHIN AND ADJACENT TO THE LIMITS OF CONSTRUCTION. AN ATTEMPT HAS BEEN MADE TO LOCATE THESE UTILITIES ON THE PLANS. HOWEVER, ALL EXISTING UTILITIES MAY NOT BE SHOWN AND THE ACTUAL LOCATIONS OF THE UTILITIES MAY VARY FROM THE LOCATIONS SHOWN. PRIOR TO BEGINNING ANY TYPE OF EXCAVATION, THE CONTRACTOR SHALL CONTACT THE UTILITIES ON THE GROUND. THE CONTRACTOR SHALL MAINTAIN THE UTILITY LOCATION MARKINGS UNTIL THEY ARE NO LONGER NECESSARY.

TEXAS STATE LAW, THE UNDERGROUND FACILITIES DAMAGE PREVENTION ACT, REQUIRES SUFFICIENT ADVANCE NOTIFICATION THROUGH THE TEXAS ONE-CALL SYSTEM CENTER BEFORE EXCAVATING USING MECHANIZED EQUIPMENT OF EXPLOSIVES (EXCEPT IN THE CASE OF AN EMERGENCY). THE ONE-CALL SYSTEM PHONE NUMBER IS IS 1-800-245-4545. THE CONTRACTOR IS ADVISED THAT THERE IS A SEVERE PENALTY FOR NOT MAKING THIS CALL. NOT ALL UTILITY COMPANIES ARE MEMBERS OF THE TEXAS ONE-CALL SYSTEM; THEREFORE, THE CONTRACTOR IS ADVISED TO CONTACT ALL NON-MEMEBER UTILITS AS WELL AS THE ONE-CALL SYSTEM.

LEGEND

PAVEMENT REMOVAL

GARVER

© 2017 GARVER, LLC
THIS DOCUMENT, ALONG WITH THE IDEAS AND DESIGNS CONVEYED HEREIN, SHALL BE CONSIDERED INSTRUMENTS OF PROFESSIONAL SERVICE AND ARE PROPERTY OF GARVER, LLC. ANY USE, REPRODUCTION, OR DISTRIBUTION OF THIS DOCUMENT, ALONG WITH THE IDEAS AND DESIGN CONTAINED HEREIN, IS PROHIBITED UNLESS AUTHORIZED IN WRITING BY GARVER, LLC OR EXPLICITLY ALLOWED IN THE GOVERNING PROFESSIONAL SERVICES AGREEMENT FOR THIS WORK.

REGISTRATION NO. F-5713

STATE OF TEXAS
COLIN M. BIBLE
107159
LICENSED PROFESSIONAL ENGINEER

DIGITALLY SIGNED
12/26/2017

REV.	DATE	DESCRIPTION	BY

ADDISON AIRPORT
ADDISON, TEXAS

WING AVIATION APRON CONNECTOR AND CLAIRE CHENNAULT STREET DRIVEWAY RECONSTRUCTION

CLAIRE CHENNAULT STREET DRIVEWAY - DEMOLITION PLAN (BASE BID 2)

JOB NO.: 17081100
DATE: NOV 2017
DESIGNED BY: JAH
DRAWN BY: JAH

BAR IS ONE INCH ON ORIGINAL DRAWING
0 1"
IF NOT ONE INCH ON THIS SHEET, ADJUST SCALES ACCORDINGLY.

DRAWING NUMBER
C-202

SHEET NUMBER 20

File: I:\2017\17081100 - ads on-call\Drawings\work order no. 3\ADS-SBA-C201-DP.dwg Last Save: 11/7/2017 1:34 PM Last saved by: KKRutabana
Last plotted by: Beville, Brandon C. Plot Style: AECmono.ctb Plot Scale: 1:1 Plot Date: 12/26/2017 2:00 PM Plotter used: AutoCAD PDF (General Documentation).pc3

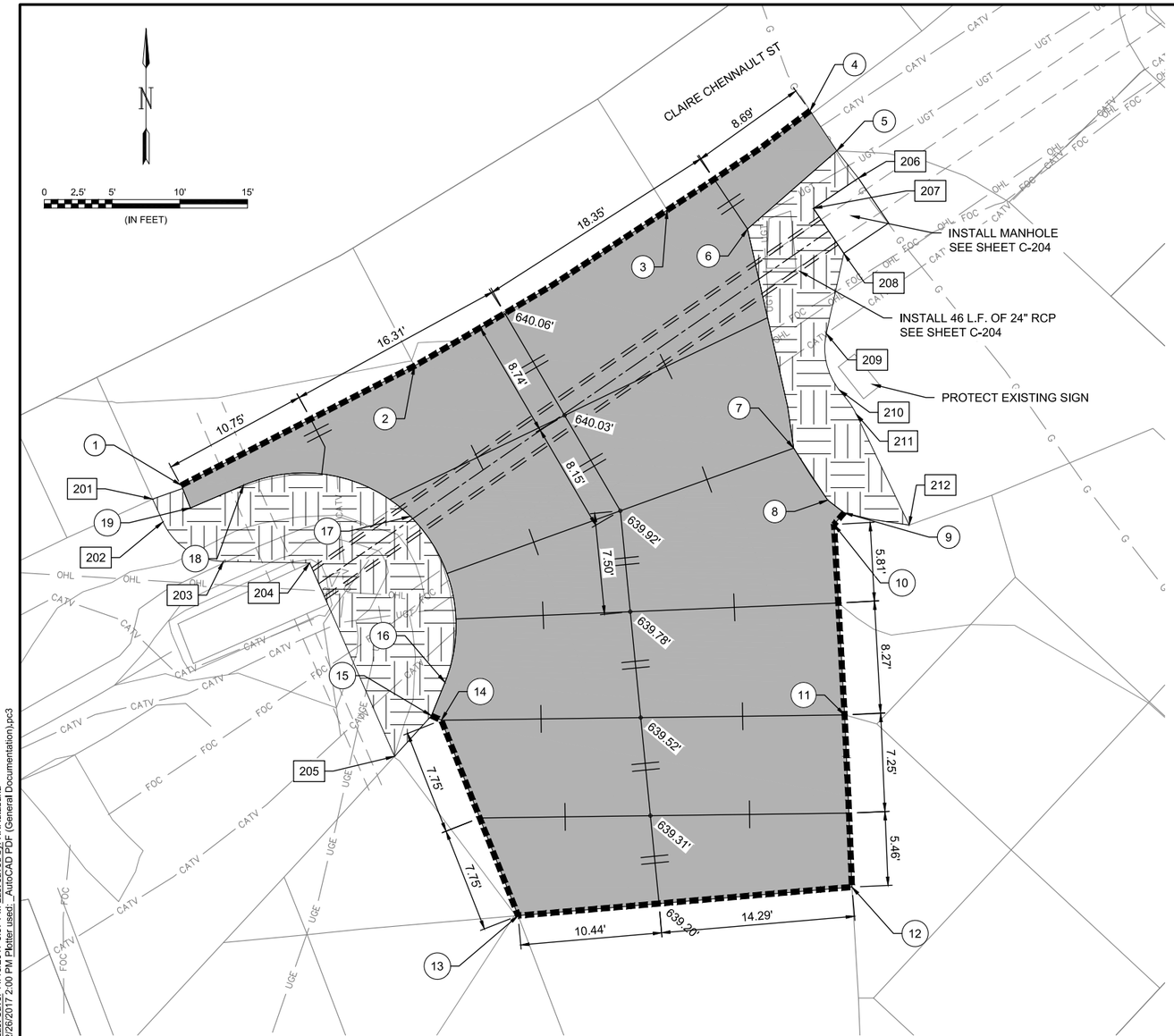

POINT TABLE			
POINT NO.	NORTHING	EASTING	ELEVATION
1	7041767.68	2479249.58	639.85
2	7041776.49	2479266.78	639.99
3	7041787.99	2479285.43	640.28
4	7041795.32	2479295.97	640.31
5	7041792.37	2479297.95	640.17
6	7041786.60	2479291.36	640.09
7	7041770.42	2479294.76	640.17
8	7041766.59	2479297.27	640.20
9	7041765.65	2479298.48	640.18
10	7041764.78	2479297.74	640.15
11	7041750.72	2479298.52	639.78
12	7041738.02	2479299.07	639.43
13	7041735.91	2479274.43	639.01
14	7041750.34	2479268.76	639.34
15	7041750.66	2479268.04	639.33
16	7041753.13	2479269.03	639.53
17	7041765.38	2479266.48	639.88
18	7041767.69	2479254.17	639.89
19	7041766.00	2479250.25	639.79

POINT TABLE			
POINT NO.	NORTHING	EASTING	ELEVATION
201	7041766.66	2479247.45	639.81
202	7041764.98	2479248.22	639.53
203	7041762.06	2479252.68	638.54
204	7041761.95	2479259.05	638.95
205	7041747.66	2479265.31	639.00
206	7041790.35	2479299.55	640.08
207	7041788.12	2479296.23	640.12
208	7041784.80	2479298.47	640.18
209	7041778.88	2479297.18	640.19
210	7041774.72	2479298.14	640.41
211	7041772.94	2479299.38	640.28
212	7041764.74	2479303.29	640.24

NOTE:
MATCH EXISTING ELEVATIONS WHERE PROPOSED PAVEMENT MEETS EXISTING PAVEMENT.

CAUTION: UNDERGROUND UTILITIES EXIST WITHIN AND ADJACENT TO THE LIMITS OF CONSTRUCTION. AN ATTEMPT HAS BEEN MADE TO LOCATE THESE UTILITIES ON THE PLANS. HOWEVER, ALL EXISTING UTILITIES MAY NOT BE SHOWN AND THE ACTUAL LOCATIONS OF THE UTILITIES MAY VARY FROM THE LOCATIONS SHOWN. PRIOR TO BEGINNING ANY TYPE OF EXCAVATION, THE CONTRACTOR SHALL CONTACT THE UTILITIES ON THE GROUND. THE CONTRACTOR SHALL MAINTAIN THE UTILITY LOCATION MARKINGS UNTIL THEY ARE NO LONGER NECESSARY.

TEXAS STATE LAW, THE UNDERGROUND FACILITIES DAMAGE PREVENTION ACT, REQUIRES SUFFICIENT ADVANCE NOTIFICATION THROUGH THE TEXAS ONE-CALL SYSTEM CENTER BEFORE EXCAVATING USING MECHANIZED EQUIPMENT OF EXPLOSIVES (EXCEPT IN THE CASE OF AN EMERGENCY). THE ONE-CALL SYSTEM PHONE NUMBER IS IS 1-800-245-4545. THE CONTRACTOR IS ADVISED THAT THERE IS A SEVERE PENALTY FOR NOT MAKING THIS CALL. NOT ALL UTILITY COMPANIES ARE MEMBERS OF THE TEXAS ONE-CALL SYSTEM; THEREFORE, THE CONTRACTOR IS ADVISED TO CONTACT ALL NON-MEMEBER UTILITS AS WELL AS THE ONE-CALL SYSTEM.

LEGEND

- PROPOSED PAVEMENT
- PROPOSED SODDING
- TYPE "A-1" - REINFORCED ISOLATION JOINT
- TYPE "E" - DOWELED CONSTRUCTION JOINT
- TYPE "C" - DOWELED CONTRACTION JOINT
- TYPE "B" - HINGED CONTRACTION JOINT

GARVER

© 2017 GARVER, LLC
THIS DOCUMENT, ALONG WITH THE IDEAS AND DESIGNS CONVEYED HEREIN, SHALL BE CONSIDERED INSTRUMENTS OF PROFESSIONAL SERVICE AND ARE PROPERTY OF GARVER, LLC, ANY USE, REPRODUCTION, OR DISTRIBUTION OF THIS DOCUMENT, ALONG WITH THE IDEAS AND DESIGN CONTAINED HEREIN, IS PROHIBITED UNLESS AUTHORIZED IN WRITING BY GARVER, LLC OR EXPLICITLY ALLOWED IN THE GOVERNING PROFESSIONAL SERVICES AGREEMENT FOR THIS WORK.

REGISTRATION NO. F-5713

STATE OF TEXAS
COLIN M. BIBLE
107159
LICENSED PROFESSIONAL ENGINEER

DIGITALLY SIGNED
12/26/2017

REV.	DATE	DESCRIPTION	BY

ADDISON AIRPORT

ADDISON AIRPORT
ADDISON, TEXAS

WING AVIATION APRON CONNECTOR AND CLAIRE CHENNAULT STREET DRIVEWAY RECONSTRUCTION

CLAIRE CHENNAULT STREET DRIVEWAY - LAYOUT PLAN (BASE BID 2)

JOB NO.: 17081100
DATE: NOV 2017
DESIGNED BY: JAH
DRAWN BY: JAH

BAR IS ONE INCH ON ORIGINAL DRAWING
0 1"
IF NOT ONE INCH ON THIS SHEET, ADJUST SCALES ACCORDINGLY.

DRAWING NUMBER
C-203

SHEET NUMBER 21

File: I:\2017\17081100 - ads on-call\Drawings\work order no. 3\ADS-SBA-C202-LP.dwg Last Save: 11/16/2017 3:57 PM Last saved by: KKRutabana
Last plotted by: Beville, Brandon C. Plot Style: AECmono.ctb Plot Scale: 1:1 Plot Date: 12/26/2017 2:00 PM Plotter used: AutoCAD PDF (General Documentation).pc3

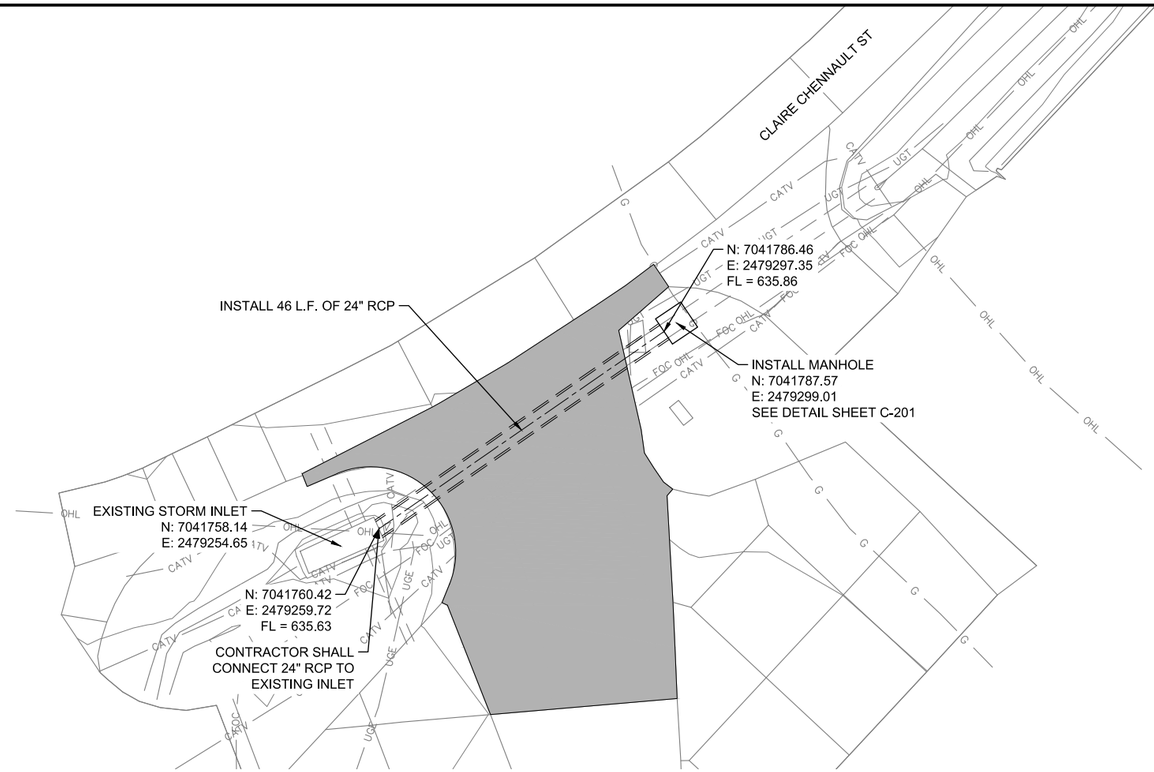

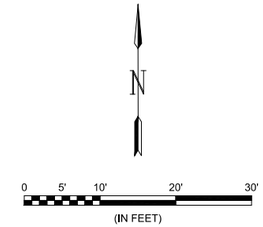

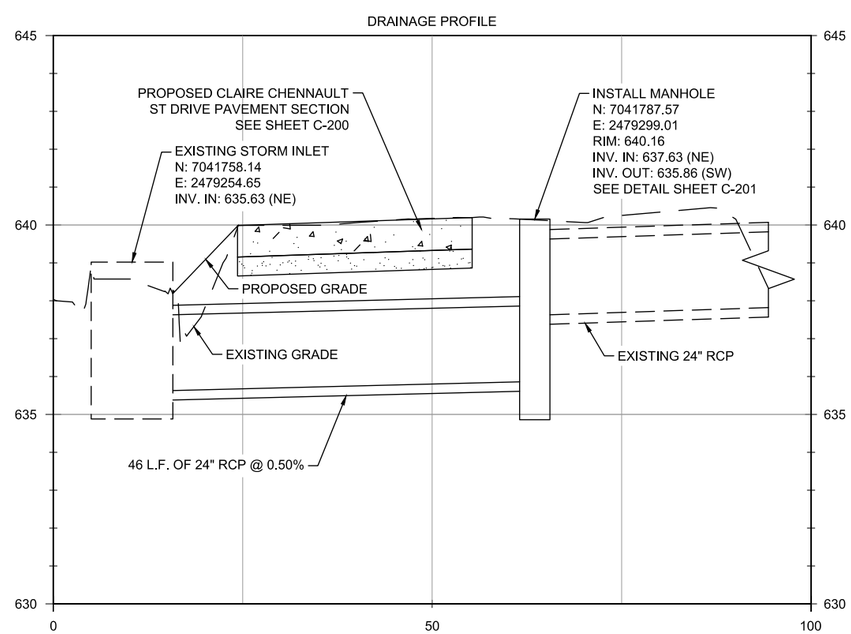

LEGEND

- PROPOSED PAVEMENT
- PROPOSED 24" RCP

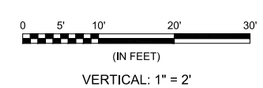

VERTICAL: 1" = 2'

GARVER

© 2017 GARVER, LLC
THIS DOCUMENT, ALONG WITH THE IDEAS AND DESIGNS CONVEYED HEREIN, SHALL BE CONSIDERED INSTRUMENTS OF PROFESSIONAL SERVICE AND ARE PROPERTY OF GARVER, LLC. ANY USE, REPRODUCTION, OR DISTRIBUTION OF THIS DOCUMENT, ALONG WITH THE IDEAS AND DESIGN CONTAINED HEREIN, IS PROHIBITED UNLESS AUTHORIZED IN WRITING BY GARVER, LLC OR EXPLICITLY ALLOWED IN THE GOVERNING PROFESSIONAL SERVICES AGREEMENT FOR THIS WORK.

REGISTRATION NO.
F-5713

STATE OF TEXAS
COLIN M. BIBLE
107159
LICENSED PROFESSIONAL ENGINEER

DIGITALLY SIGNED
12/26/2017

REV.	DATE	DESCRIPTION	BY

ADDISON AIRPORT

ADDISON AIRPORT
ADDISON, TEXAS

WING AVIATION APRON CONNECTOR
AND CLAIRE CHENNAULT STREET
DRIVEWAY RECONSTRUCTION

CLAIRE CHENNAULT
STREET DRIVEWAY -
DRAINAGE PLAN
(BASE BID 2)

JOB NO.: 17081100
DATE: NOV 2017
DESIGNED BY: JAH
DRAWN BY: JAH

BAR IS ONE INCH ON ORIGINAL DRAWING
0 1"
IF NOT ONE INCH ON THIS SHEET, ADJUST SCALES ACCORDINGLY.

DRAWING NUMBER
C-204

SHEET NUMBER **22**

File: I:\2017\17081100 - ads on-call\Drawings\work order no. 3\ADS-SBA-D200-DP.dwg Last Save: 11/7/2017 4:01 PM Last saved by: KKRutabana
Last plotted by: Beville, Brandon C. Plot Style: AECmono.ctb Plot Scale: 1:1 Plot Date: 12/26/2017 2:00 PM Plotter used: _AutoCAD PDF (General Documentation).pc3