William M. Dyer
Real Estate Manager
16051 Addison Road
Suite #220
Addison, Texas 75001

Main: 972-392-4850
Direct: 972-392-4856
Fax: 972-788-9334
bill.dyer@addisonairport.net

- M E M O R A N D U M -

To: Lisa Pyles, Director of Infrastructure, Operations and Systems

From: Bill Dyer, Real Estate Manager

CC: Joel Jenkinson, Airport Director

Date: 4/15/2014

Re: Request from 6200 GP, LLC for the Town's Consideration and Consent to Structural Improvements to their Leasehold Improvements at Addison Airport

---

6200 GP, LLC is requesting the Town's consideration and consent to certain structural improvements to be made by the ground tenant to their existing building improvements. Airport Management is recommending the Town give its consent pursuant to the terms of the underlying ground lease.

The ground tenant is proposing to make modifications to their existing hangar structure located at 4550 Jimmy Doolittle Drive at Addison Airport so their hangar can receive taller aircraft sections than can now be accommodated. The current hangar door system has an open clearance height of 28'. The proposed improvements require structural modifications to the roof support and door track system. The modified fascia at the building centerline above the

hangar doors will be equipped with two doors, which can be remotely operated to allow up to 38' foot high aircraft tail sections when necessary. As designed and engineered, the proposed modification will not require any change to the overall building elevation, which could otherwise penetrate existing building height restrictions along the airport's flight line.

Section 6 of the Ground Lease, as amended, requires the Landlord to give its prior written consent before any structural modifications are made to the Building Improvements.

Airport Management requested its consulting engineer, Garver Engineers, to review the proposed structural design and engineering prepared by Shearer, Monk, & Voigt Architects and Engineers, who are licensed in the state of Texas. Garver's review found the proposed plans and calculations to appear adequate and appropriate.

Conclusion and Recommendation

The proposed structural modifications appear to be reasonable and appropriate for the existing structure. These modifications will allow the ground tenant to accommodate larger aircraft which is ideal for those properties abutting the airport's flight line. This opportunity corresponds to the strategic initiative for Addison Airport of enhancing the airport's overall value.

Airport Management is recommending the Town to give its consent to the proposed modifications provided the improvements are made materially consistent to the design plan provided to Airport Management.

K NEW DOOR SYSTEM
OVIDE NEW DOOR FRAMING
TH ELCTRCALLY CONTROLLED
TH ELCTRCALLY CONTROLLED

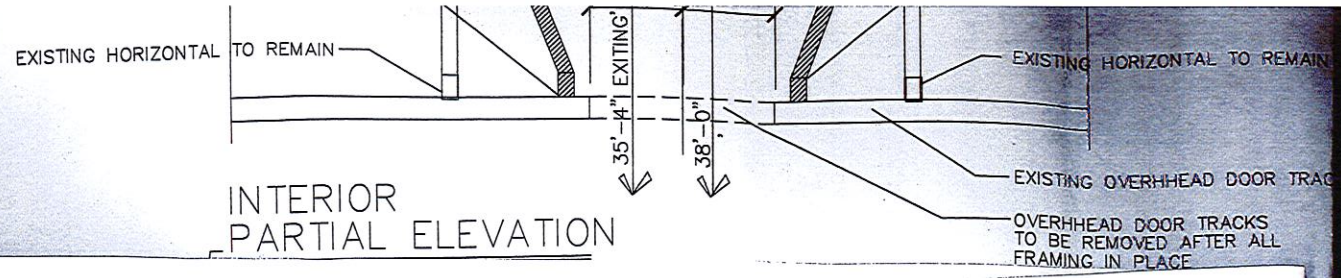

INTERIOR
PARTIAL ELEVATION

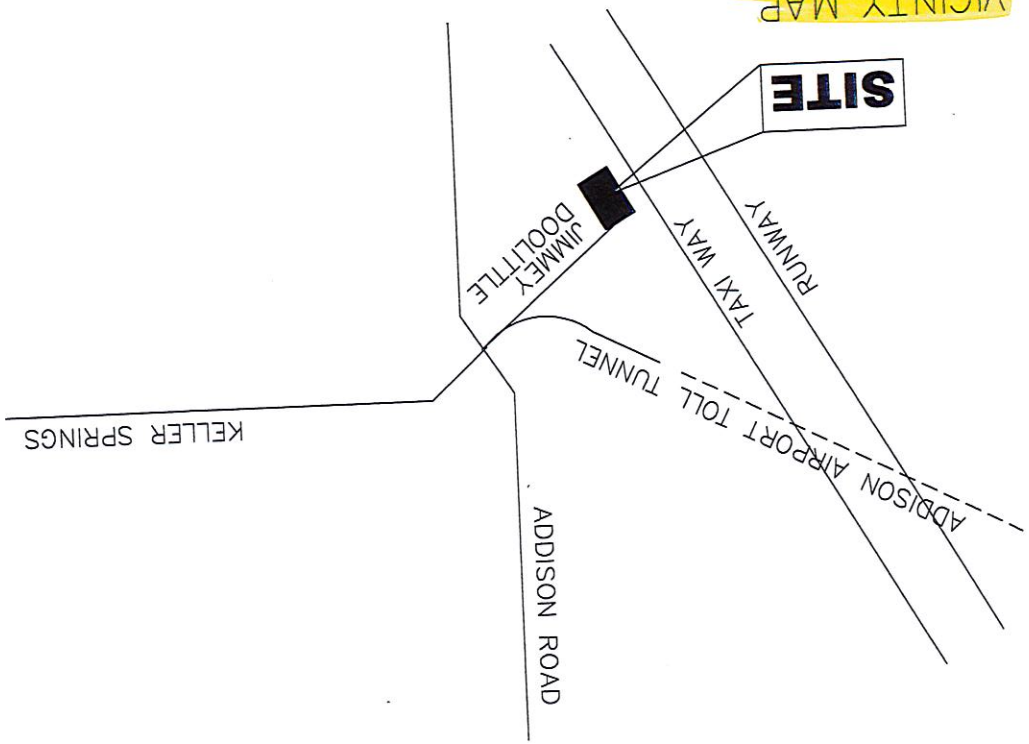

VICINTY MAP

7 PLAN AT MODIFICATION
SCALE 3/8" = 1'-0"

Sheet Number
S101
Sequence ___ of ___

Sheet Title

Project No. 2013-13

Date Issued 01-7-14

3 ROOF FRAMING
SCALE 1/8" = 1'-0"

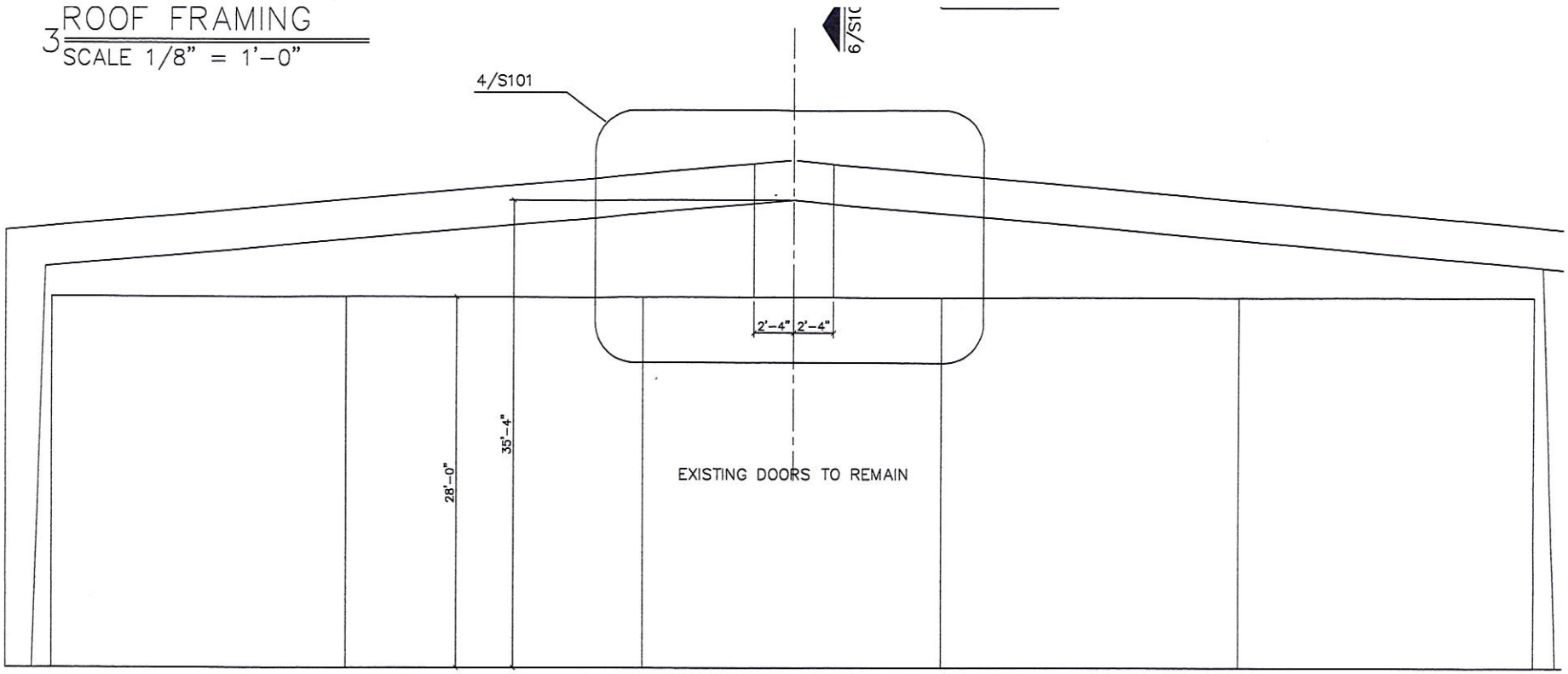

2 ELEVATION
SCALE 1/8" = 1'-0"

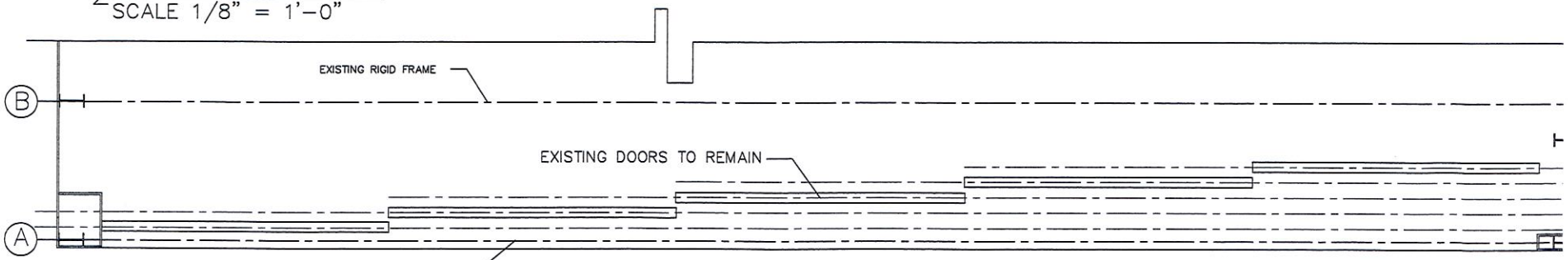

1 PARTIAL PLAN
SCALE 1/8" = 1'-0"

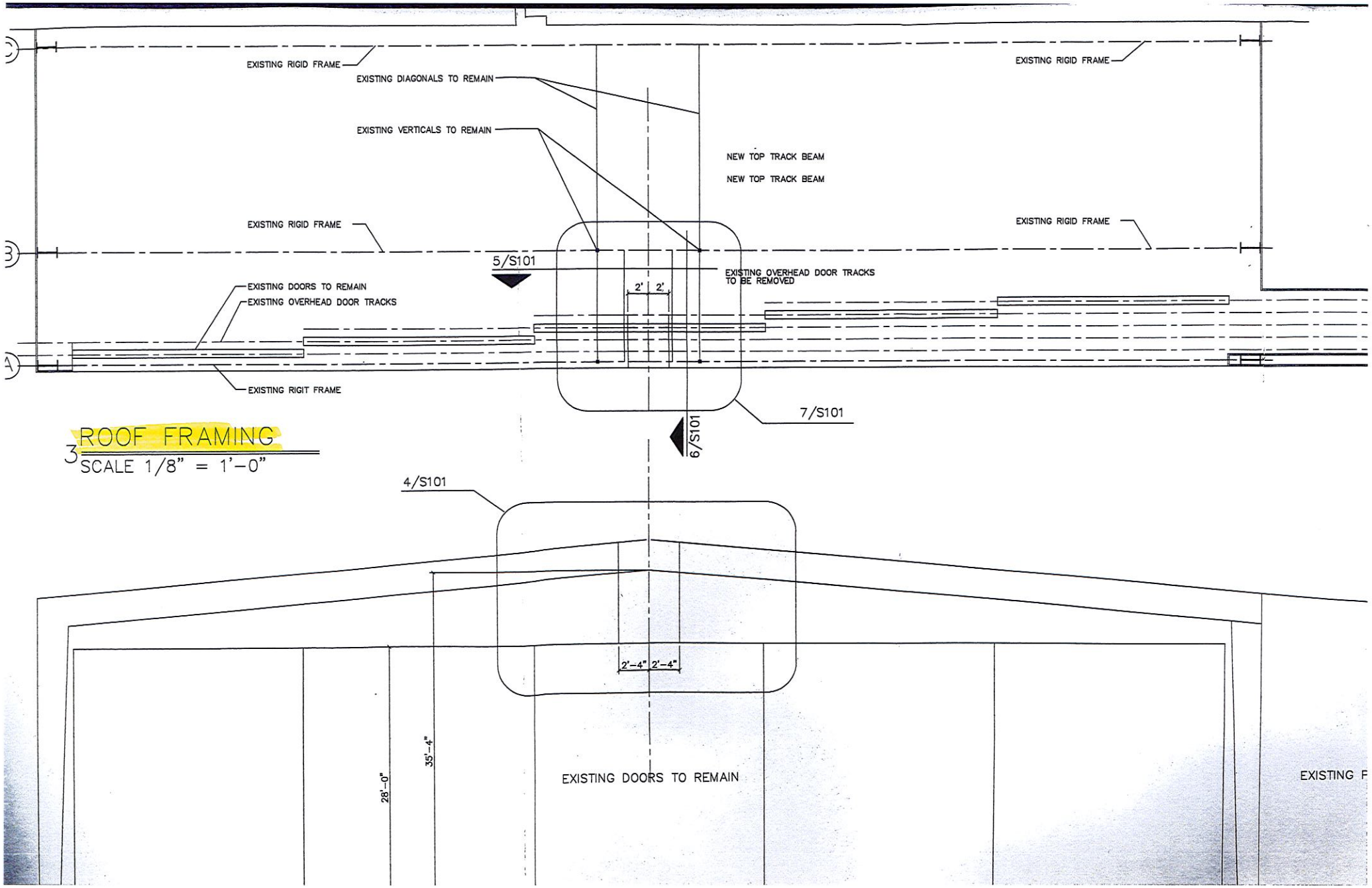

3 ROOF FRAMING
SCALE 1/8" = 1'-0"

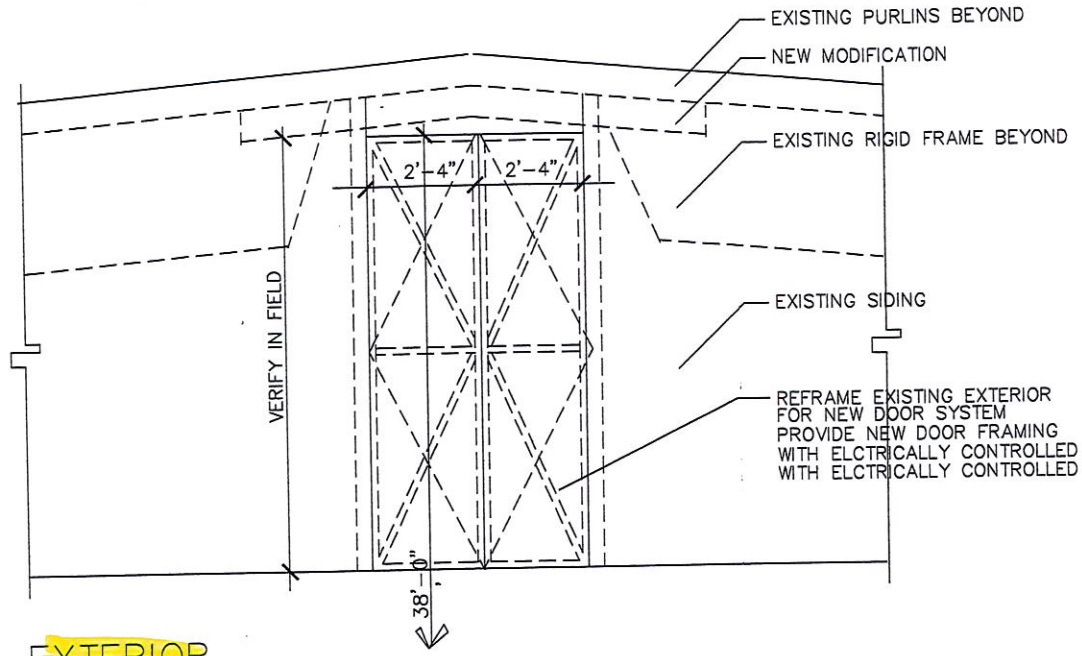

RIGID FRAME
TO BE REMO
FRAMING IN

EXISTING VERTICALS

4"X4"X3/8"

EXISTING HORIZONT

4 EXTERIOR PARTIAL ELEVATION
SCALE 3/8" = 1'-0"

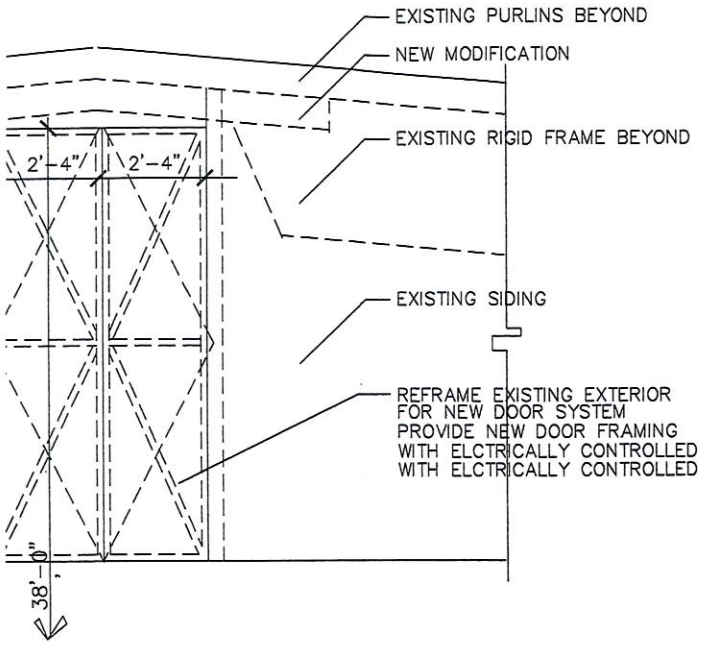

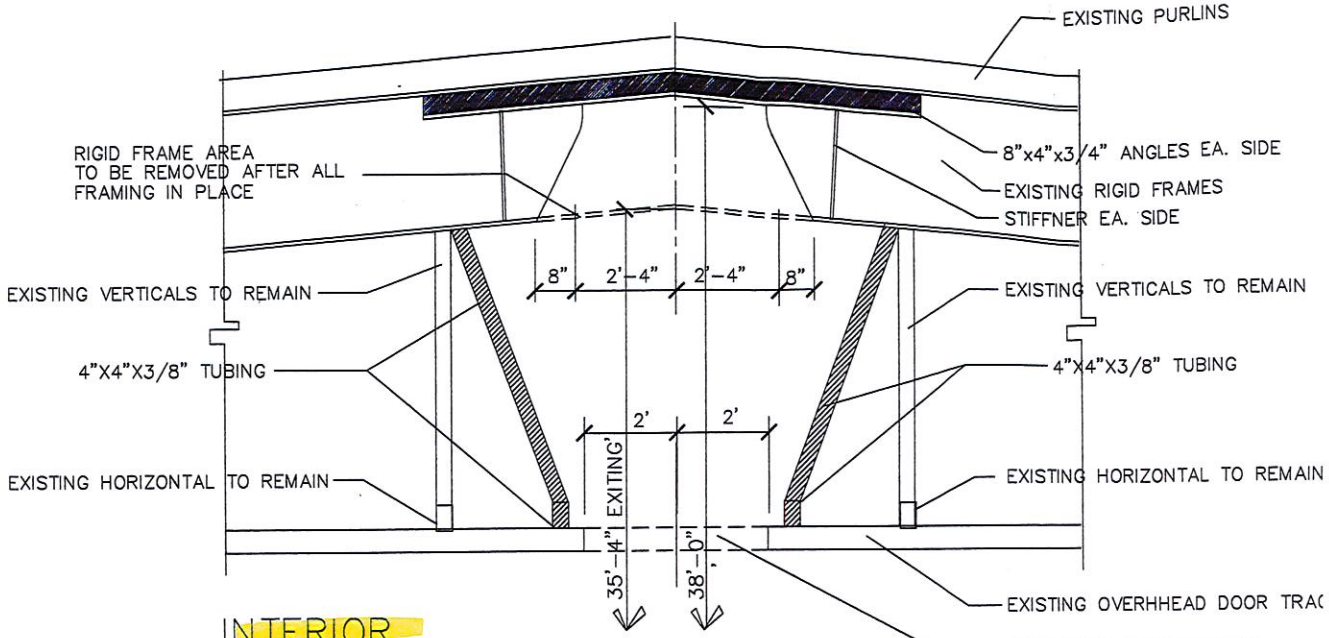

5 INTERIOR PARTIAL ELEVATION

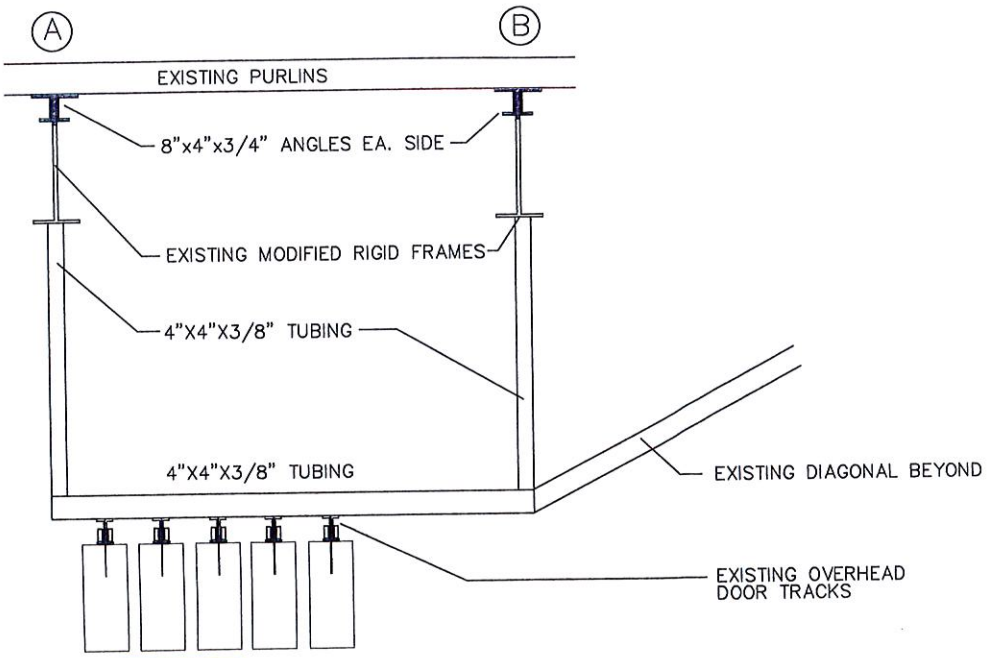

6 SECTION

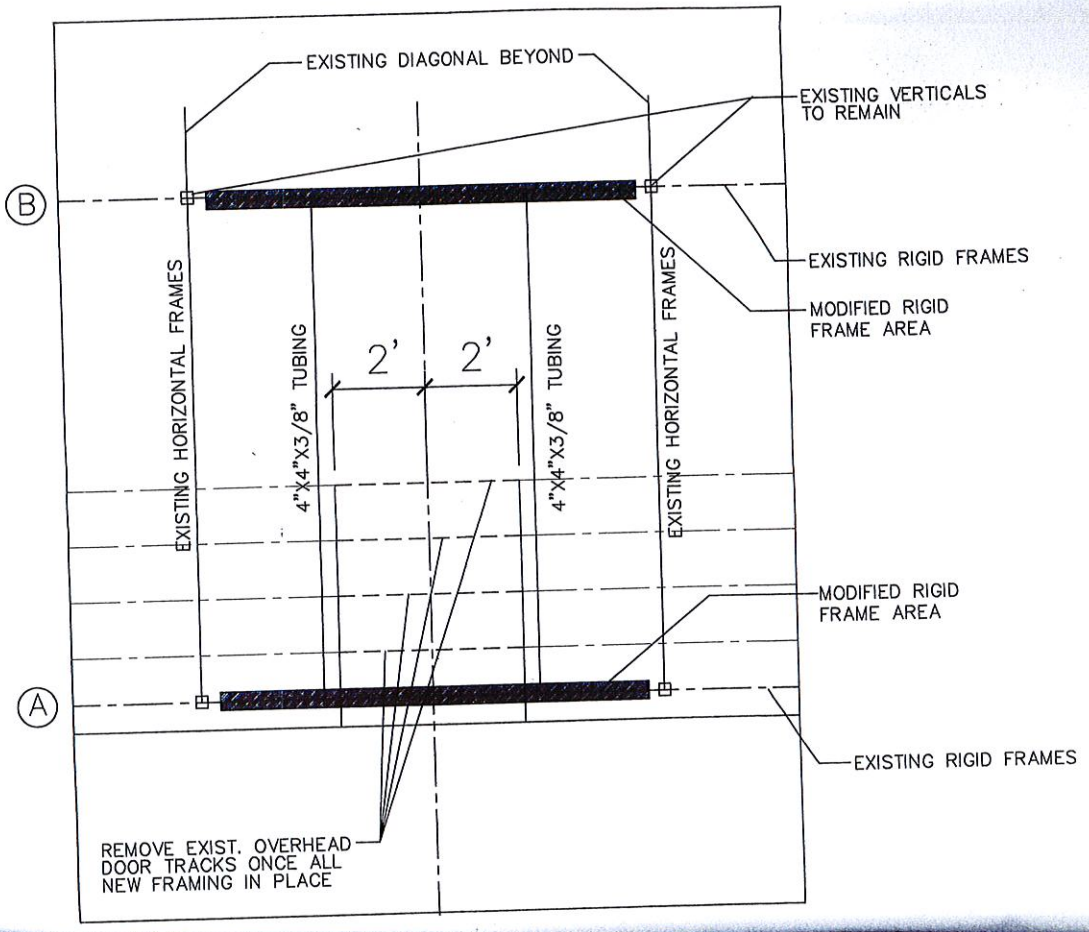

Shearer Monk & Voiot

J I BARLOW
ENGINEERING P.C.
PO BOX 2636 160 W. TOWNSHIP AVE
COLORADO CITY, AZ 86021 435-656-9530
TX REG.# F-11091

SHEET NO. _____

PROJECT DOOLITTLE HANGER
LOCATION ADDISON, TX
DATE FEB. 2014 BY J. BARLOW

FROM RISA MODEL - MAX BENDING:

(+) $M_u = 61.8$ k·ft 157.6 k·ft

(−) $M_u = 151.4$ k·ft 243.8 k·ft

YIELDING:

$$M_n = M_p = F_y Z_x = \frac{M_u}{\phi_b} = \frac{243.8(12)}{0.90} = 3250.7 \text{ k·in}$$

$$F_y = 50 \text{ ksi}$$

$$Z_{x\,REQ'D} = \frac{3250.7 \text{ k·in}}{50 \text{ ksi}} = 65.0 \text{ in}^3$$

TRY W14×43 $Z_x = \underline{69.6 \text{ in}^3}$

LATERAL TORSIONAL BUCKLING:

$$L_b = 6'\text{-}0'' = 72''$$

$$L_p = 1.76\, r_y \sqrt{\frac{E}{F_y}} = 1.76(1.89)\sqrt{\frac{29\times10^3}{50}} = 80.1''$$

$L_b < L_p$ ∴ LATERAL TORSIONAL BUCKLING DOES NOT APPLY

$\boxed{\text{USE W14×43}}$

J I BARLOW
ENGINEERING P.C.
PO BOX 2636 160 W. TOWNSHIP AVE
COLORADO CITY, AZ 86021 435-656-9530

SHEET NO. _____

PROJECT DOOLITTLE HANGER
LOCATION ADDISON, TX
DATE APRIL 2014 BY J. BARLOW

CONNECTION DESIGN

3/4" ϕ A325 BOLTS

SHEAR $\phi v r_n = 15.9$ kips / BOLT

TENSION $\phi r_n = 29.8$ kips / BOLT

USE BOLT SHEAR TO TRANSFER AXIAL LOAD

$P_u = 18.1$ k

BOLTS REQ'D $= \frac{18.1\text{k}}{15.9\text{k/BOLT}} = 1.13$ TRY (2) BOLTS

BEARING STRENGTH $\phi R_n = 0.75\left(1.5 L_c t F_u \leq 3.0 d t F_u\right)$

$= 0.75\left(1.5(2.3)(0.25)(65) \overset{?}{\leq} 3.0(0.75)(0.25)(65)\right)$

$= 0.75\left(560.6 \overset{?}{\leq} \boxed{36.6}\right)$

$= \boxed{27.42 \text{ kips/BOLT}} > 15.9$ $\boxed{\text{OK}}$

TRANSFER BENDING FORCES THROUGH BOLT TENSION

$R_u = \frac{M_u}{\ell} = \frac{243.8 \text{ k-ft}}{8'} = 30.5$ k.

lever arm

BOLTS REQ'D $= \frac{30.5\text{k}}{29.8\text{k/BOLT}} = 1.02$ TRY (2) BOLTS

FLANGE LOCAL BENDING:

$\phi R_n = 0.90\left(6.25 t_f^2 F_{yf}\right) = 0.90\left(6.25(0.25)^2(36\text{ksi})\right) = 12.66$ kips

USE TRANSVERSE STIFFENER

$\phi P_n = 0.90(36)(A_g) = 0.90(36)(1/4)(2+2) = 32.4$ $\boxed{\text{1/4} \times 2\text{" STIFF EA. SIDE}}$

THIS ASSUMES ALL TENSION TO TRANSFER THROUGH THE STIFFENERS.

J I BARLOW
ENGINEERING P.C.
PO BOX 2636 160 W. TOWNSHIP AVE
COLORADO CITY, AZ 86021 435-656-9530
TX REG # F-11091

SHEET NO. _____

PROJECT DOOLITTLE HANGER
LOCATION ADDISON, TX
DATE APRIL 2014 BY J. BARLOW

COMPRESSION: (IGNORE MAINFRAME PIECE REMAINING)

W14x43:

$$b_f/2t_f = 7.54$$

$$0.56\sqrt{\frac{29\times10^6}{50000}} = 13.49$$

∴ SECTION IS NONCOMPACT

CONSERVATIVE
ASSUME 6' MAX

$$\frac{KL}{r} = \frac{(1.0)(72)}{1.89} = 38.1$$

$$4.71\sqrt{\frac{E}{F_y}} = 4.71\sqrt{\frac{29\times10^6}{50000}} = 113.43$$

$$\frac{KL}{r} < 4.71\sqrt{\frac{E}{F_y}}$$

$$F_e = \frac{\pi^2 E}{\left(\frac{KL}{r}\right)^2} = \frac{\pi^2(29\times10^6)}{(38.1)^2} = 197.2 \text{ ksi}$$

$$F_{cr} = \left[0.658^{\frac{F_y}{F_e}}\right] F_y$$

$$= \left[0.658^{\frac{50}{197.2}}\right] 50 = \underline{44.97 \text{ ksi}}$$

$$P_n = F_{cr} A_g = 44.97 \text{ ksi}\,(12.6 \text{ in}^2) = \underline{566.6 \text{ kips}}$$

$$\phi_c P_n = 0.9(566.6 \text{ kips}) = 509.9 \text{ kips}$$

COMBINED FLEXURE & COMPRESSION

$$\frac{P_r}{P_c} = \frac{18.1 \text{ kips}}{509.9 \text{ kips}} = 0.035$$

CHECK H1-1b $\frac{P_r}{2P_c} + \left(\frac{M_{rx}}{M_{cx}} + \frac{M_{ry}}{M_{cy}}\right) \leq 1.0 \rightarrow \frac{18.1}{2(509.9)} + \frac{243.8}{0.9(50)(69.6)}$

$= 0.952 \leq 1.0$ OK

J I BARLOW
ENGINEERING P.C.
PO BOX 2636 160 W. TOWNSHIP AVE
COLORADO CITY, AZ 86021 435-656-9530
TX REG.# F-11091

SHEET NO. _____

PROJECT DOOLITTLE HANGER
LOCATION ADDISON, TX
DATE APRIL 2014 BY J. BARLOW

WELD REQ'D AT STIFFENER

(FLANGE)

3/16" FILLET WELD:

$\phi R_n = 0.75(0.60)(70ksi)(0.707)(0.1875) = 4.17$ k/in

2" EA. SIDE: $\ell_w = 4(2) = 8''$ $\rightarrow \phi R_n = 8(4.17) = \underline{33.36k}$

$\phi R_n > R_u$ $\therefore$ 3/16 FILLET WELD <u>OK</u>